163 US 681

819

TRANSCRIPT OF RECORD.

UNITED STATES CIRCUIT COURT OF APPEALS

EIGHTH CIRCUIT.

163-681

DECEMBER TERM, 1894.

No. 516.

THE CHURCH OF CHRIST AT INDEPENDENCE, MISSOURI, ET AL., APPELLANTS.

vs.

THE REORGANIZED CHURCH OF JESUS CHRIST OF LATTER DAY SAINTS, APPELLEE.

APPEAL FROM THE CIRCUIT COURT OF THE UNITED STATES FOR THE WESTERN DISTRICT OF MISSOURI.

FILED AUGUST 11, 1894.

UNITED STATES CIRCUIT COURT OF APPEALS
EIGHTH CIRCUIT.

DECEMBER TERM, 1894.

No. 516.

THE CHURCH OF CHRIST AT INDEPENDENCE, MISSOURI, ET AL., APPELLANTS.

vs.

THE REORGANIZED CHURCH OF JESUS CHRIST OF LATTER DAY SAINTS, APPELLEE.

APPEAL FROM THE CIRCUIT COURT OF THE UNITED STATES FOR THE WESTERN DISTRICT OF MISSOURI.

Caption to Transcript	1
Transcript from U. S. Circuit Court, Western District of Missouri	2
Stipulation as to Printing Record	2
Citation and Acknowledgment of Service	3
Caption to Transcript	4
Order Granting Leave to File Amended Bill of Complaint	4
Amended Bill of Complaint	5
Answer to Amended Bill of Complaint	11
Replication	25
Order Appointing John M. Orr Special Examiner to Take Testimony	26
Order Granting Leave to Amend Bill of Complaint	26
Amendment to Amended Bill of Complaint	27
Order, Cause Submitted	28
Decree	28
Motion for Rehearing	31
Stipulation as to Disclaimer of Mr. and Mrs. C. A. Hall	32
Petition for Appeal	32
Assignment of Errors	33
Order Denying Motion for Rehearing and Allowing Appeal	36
Complainant's Abstract	37
Amended Bill of Complaint	37
Answer	43

Replication 54
Testimony for Complainant 54
E. L. Kelley 54
Exhibit B (Articles of Association of Reorganized Church of Jesus Christ of Latter Day Saints) 56
James Whitehead 59
Joseph Smith 69
Epitome of Faith 74
Law of Marriage 76
Government and Laws in General 84
Title Page of Book of Doctrine and Covenants 97
William B. Smith 123
Agreement of Counsel as to Value of Property in Controversy 138
J. W. Brackenbury 138
W. W. Blair 139
Rules of Representation in the Reorganized Church 191
Henry A. Stebbins 197
Robert Weston 203
Isaac N. Rogers 205
William McCoy 205
Thomas Hailey 207
Dr. Clarence St. Clair 207
Emily D. P. Young 208
John H. Carter, Sr 211
John Taylor 220
Dr. Charles Johnson 226
E. C. Briggs 229
Hiram Rathbun, Sr 247
John W. Brackenbury 263
E. L. Kelley, Re-Cross Examination of 264
Exhibit 20 (Deed, J. H. Flournoy et ux. to Edward Partridge, December 19, 1831) 266
W. R. Hall 271
E. L. Kelley, Testimony of, Continued 273
Exhibit 21 (Deed, Edward Partridge to John Cowdery et al 274
Exhibit 22 (Quit Claim Deed, Marie Louise Johnson et al. to George A. Blakeslee, Trustee, June 9, 1887) 275
W. R. Hall, Re-called 276
E. L. Kelley, Re-called 277
Exhibit 23 (Deed, Elizabeth Ann Cowdery to Marie Louise Johnson, May 29, 1886) 278
Exhibit 24 (Notice to Quit Possession, Dated June 11, 1887) 279
Robert Weston 280
John H. Thomas 285
Exhibit W (Extracts from Work of Granville Hedrick, 1856) 291
Exhibit 1 (Extracts from Journal of Discourses by Brigham Young, etc) 295
Charles R. Ross 296

Mrs. Mary Eaton 300
Extract from Exhibit W 305
John T. Crisp 306
Martha A. Hall 310
Exhibit X (Extract from New Revised and Annotated Code of Iowa) 311
Exhibit Y (Certificate of J. A. Wickham, Adjutant Gen'l, April 23, 1892) 314
Exhibit Z (Letter, A. A. Lesueur, Secretary of State, to P. P. Kelley, April 19, 1892) 314
Exhibit 27 (Certificate of Secretary of State as to Justices of the County Court of Caldwell County, Missouri) 315
Exhibit 26 (Copy of Speech of General Clarke, Delivered to the Mormons at Far West, Mo.) 316
Exhibit 30 (Articles of Association and By-Laws of the Reorganized Church of Latter Day Saints) 316
Jacob Gregg 319
William Stewart 321
Testimony for Defendants 323
Wilford Woodruff 323
Melissa Lot Willes 345
Lorenzo Snow 348
Lyman O. Littlefield 358
Joseph C. Kingsbury 365
Mercy Rachel Thompson 375
Bathsheba Smith 390
Emily D. P. Young 395
Joseph B. Noble 396
Lucy W. Kimball 403
Mary Ann West 411
Priscilla M. Staines 416
Cyrus H. Wheelock 416
Samuel W. Richards 422
Jason W. Briggs 425
L. D. Hickey 439
Ember Mason 443
E. L. Kelley 446
H. G. Henley 448
P. H. Grinter 448
Defendants' offer of Certain Evidence, and Complainant's Objections 448
Thomas Maxwell 452
W. R. Moore 454
Alma Owens 454
Richard Hill 455
Alma Owens, Testimony of, Resumed 455
Richard Hill, Continued 456
Alma Owens, Continued 456
Richard Hill, Continued 460
Exhibit 106 (Extract from "Truth Teller") 464
William R. Wilson 478

John H. Taylor 480
E. L. Kelley 481
Josiah W. Swearingen 483
Testimony for Complainant in Rebuttal 483
John Hawley 483
Willard Griffith 494
James Whitehead 505
C. E. Reynolds 510
Exhibit 200 (Letter, C. A. Hall to C. E. Reynolds and Wife, 3 | 30 | 91) 513
Exhibit 201 (Letter, C. A. Hall to C. E. Reynolds and Wife, 3 | 16 | 91) 513
Exhibit 202 (Letter, C. A. Hall to C. E. Reynolds and Wife, 8 | 11 | 90) 514
Exhibit 203 (Letter, C. A. Hall to C. E. Reynolds and Wife, 6 | 19 | 90) 515
Joseph Smith 516
Exhibit L (Extracts from "Times and Seasons," October 1, 1842, on Marriage) 530
Exhibit O (Notice on Practice of Marriage, from "Times and Seasons") 532
W. W. Blair 533
Respondents' Abstract 541
Pleadings 543
Testimony for Respondents 545
Exhibit A. S. (Abstract of Deed, J. H. Flournoy and Wife to Edward Partridge, December 19, 1831) 546
Exhibit B. S. (Abstract of Deed, Lydia Partridge et al. to James Pool, May 5, 1848) 547
Exhibit D. S. (Abstract of Deed, James Pool to John Maxwell, August 3, 1848) 548
H. G. Henley 549
Exhibit E. S. (Transcript of Record in Case of Woods et al. vs. Pool) 550
Petition 550
Sheriff's Return on Summons 551
Record Entry of Filing of Plea of Nil Debit 551
Record Entry of Filing of Motion and Affidavit for Continuance 550
Judgment 550
Execution and Sheriff's Returns 551
Clerk's Certificate of Acknowledgment to Deeds 552
Exhibit D. S. A. (Abstract of Deed, B. F. Thompson, Sheriff, to John Maxwell, March 24, 1849) 552
Exhibit A. S. A. (Abstract of Deed, L. J. Edwards to S. H. Woodson, August 10, 1842) 554
Exhibit V. S. (Certificate of Clerk as to Dedication by S. H. Woodson et al. of Certain Property) 554
Exhibit, Transcript of Record in Case of Woodson vs. Smart, Admr. et al 555
Decree Pro Confesso as to Matilda Maxwell 555

Answer of Defendants, R. G. Smart and Matilda Maxwell filed 556
Judgment 556
Clerk's Certificate to Transcript 557
Deeds Offered in Evidence by Defendants, and Complainant's Objections Thereto 557
Exhibit K. S. (Deed John G. Hayden, Sheriff, to Heirs of John Kelley, Deceased, September 19, 1867 560
Exhibit I. S. (Deed, John G. Hayden, Sheriff, to John Montgomery, September 19, 1867.) 561
Exhibit H. S. (Deed, John G. Hayden, Sheriff, to Joseph C. Irwin, March 23, 1867) 563
Exhibit M. S. (Deed, John G. Hayden, Sheriff, to Thomas H. Swope, March 14, 1867) 564
Exhibit N. S. (Abstract of Deed, Thomas H. Swope to Jacob Tindall, March 13, 1866) 565
Exhibit O. S. (Abstract of Deed, Jacob Tindall to John H. Hedrick, August 22, 1867) 566
Exhibit P. S. (Abstract of Deed, Joseph C. Irwin and Wife to William Eaton, July 9, 1873) 566
Exhibit Q. S. (Abstract of Deed, S. H. Woodson and Wife to A. Kean et al., November 23, 1860) 567
Exhibit R.S. (Abstract of Deed, Maria McClanahan et al., to William Eaton, March 7, 1884) 567
Exhibit L. S. (Deed, G. W. Buchanan, Administrator, to J. H. Hedrick, December 12, 1867) 568
Exhibit J. S. (Abstract of Deed, John Montgomery to John H. Hedrick, September 24, 1867) 569
Exhibit T. S. (Deed, J. H. Hedrick and Wife to Granville Hedrick, Trustee, November 8, 1869) 569
Exhibit S. S. (Deed, William Eaton and Wife to Granville Hedrick, Trustee, November 5, 1877) 570
Admission as to Appointment of Richard Hill as Trustee to Execute the Trust Imposed by Deed from Hedrick and Wife and Eaton and Wife to Granville Hedrick 572
Demurrer to Complainant's Evidence 571
Testimony of W. W. Blair 573
Testimony on Question of Adverse Possession 579
Alma Owen 579
Richard Hill 580
Alma Owen 582
Richard Hill 583
Alma Owen 584
Richard Hill 585
Alma Owen 586
Richard Hill 587
Alma Owen 587
Richard Hill 590
Alma Owens 590
Statement of Receipts for Taxes on Lots in Controversy 594–5
Exhibit 149 (Abstract of Deed, William Chrisman and Wife to

J. P. St. John et al., May 10, 1866)..... 596
Exhibit M. S. (Description of St. John and Dawson's Addition to City of Independence)..... 596
Exhibit 148 (Abstract of Deed, T. H. Swope to Joseph Luff, January 23, 1889)..... 596
Testimony of Josiah Swearingen..... 596
Admissions of Counsel..... 597
Testimony on Question of Identification and Record History.... 598
P. H. Grinter..... 598
Plat of 63 Acres Sold by Flournoy and Wife to Partridge, December, 1832 603
Thomas Maxwell..... 602
William R. Wilson..... 614
John H. Taylor..... 623
Testimony as to Books of Faith, Name of Church, Baptism for the Dead, etc..... 626
Wilford Woodruff..... 626
Testimony on Question of Polygamy..... 627
Wilford Woodruff..... 630
William B. Smith..... 630
Jason W. Briggs 630
Melissa Lott Willes..... 631
Emily D. P. Young..... 631
Lucy W. Kimball..... 632
Mercy Rachael Thompson..... 633
James Whitehead..... 636
Testimony as to the Factions..... 637
Joseph Smith..... 637
Testimony as to Rules and Doctrines..... 639
W. W. Blair 639
Testimony as to Reorganized Church—of Whom Composed 644
Henry A. Stebbins..... 644
Testimony as to Incorporation of Complainant..... 644
Joseph Smith..... 645
Secretary Stebbins..... 646
E. L. Kelley..... 647
Respondents' General Denial..... 652
Opinion of Judge Philips on Final Hearing..... 657
Stipulation to Transmit Original Exhibits to Circuit Court of Appeals..... 678
Order to Transmit Original Exhibits..... 679
Appearance of C. O. Tichenor, Council for Appellants..... 680
" John N. Southern, " " 680
" E. L. Kelley, " Appellee 680
" Frank Hagerman, " " 681
" P. P. Kelley, " " 681
" L. Traber, " " 682
" G. Edmunds, " " 682
" Smith McPherson " " 683
Argument Commenced..... 684
Order Cause Submitted..... 684

Opinion of United States Circuit Court of Appeals..... 685
Decree..... 699
Motion for Rehearing..... 700
Opinion on Petition for Rehearing..... 702
Order Denying Petition for Rehearing..... 706
Clerk's Certificate to Transcript..... 706

Pleas and proceedings in the United States Circuit Court of Appeals for the Eighth Circuit, at the May Term, 1895, of said Court, begun and held at the United States Court House in the City of St. Paul, Minnesota, on the first Monday in May, to-wit, the sixth day of May A. D. 1895, before the Honorable Henry C. Caldwell, Hon. Walter H. Sanborn and Honorable Amos M. Thayer, Circuit Judges.

Attest:— JOHN D. JORDAN,
Clerk U. S. Circuit Court of
Appeals, Eighth Circuit.

(Seal.)

Be it remembered, That heretofore, to-wit, on the eleventh day of August, A. D. 1894, a transcript of record in pursuance to an appeal allowed by the Circuit Court of the United States for the Western District of Missouri, was filed in the office of the Clerk of the United States Circuit Court of Appeals for the Eighth Circuit, in the case of the Church of Christ at Independence, Missouri, et al., Appellants vs. The Reorganized Church of Jesus Christ of Latter Day Saints, Appellee, which said transcript of record, as printed in pursuance of the stipulation of the parties for the use of said court on the hearing of this case, is in the words and figures following, to-wit:—

a In the United States Circuit Court of Appeals for the Eighth Circuit.

STIPULATION.

The Church of Christ of Independence, Missouri, and others in Error, Complainants,

vs.

The Reorganized Church of Jesus Christ of Latter Day Saints, Respondents in Error.

Paragraph (1)—The parties hereto agree that the record herein [in] shall not be printed as by the rules of this court provided excepting hereinafter recited.

Paragraph (2)—Respondent in error shall furnish the Clerk of this court twenty (20) printed copies of its abstract used in the Circuit Court wherein this case was tried, and shall furnish the same within sixty (60) days from this date. If plaintiff in error shall fail in this court there shall be taxed as costs due respondent in error on account of said abstract the sum of five hundred and five ($505) dollars. And if successful, they shall recover no costs on account of said item.

Paragraph (3)—Complainants in error shall furnish the Clerk of this court within sixty days (60) from this date twenty printed copies of their abstract used in said Circuit Court trying this case. If plaintiff in error shall succeed in this court, there shall be
b taxed as costs due plaintiff in error on account of said abstract, the sum of $141.00. Respondent in error if successful, shall recover nothing on account of said item.

Paragraph (4)—The Clerk of this court shall cause to be printed all the pleadings, excepting the original bill and answer thereto. He shall print the petition for appeal, assignments of error, citation, all orders, and all record entries, the opinion of the Circuit Court, and the declination of C. A. Hall and wife, to join in this appeal.

Paragraph (5)—All exhibits referred to in the abstracted evidence referred to in paragraphs (2) and (3) hereof, whether the same have been marked filed in said Circuit Court or not may be used on the trial and submission of this case in this court.

Paragraph (6)—Subject to the rights reserved in paragraph (7) of this agreement, the case shall be submitted and determined on the abstracts referred to in paragraph (2) and (3) hereof, and upon the matters to be printed by the Clerk as agreed upon in paragraph four (4) hereof, and upon the exhibits referred to in paragraph five (5) hereof. This stipulation is to take the place of the designations

heretofore made by the parties as to the parts of the records to be printed.

Paragraph (7)—All rights and objections of any and all kinds not covered by the aforesaid agreements, are reserved to any and all parties hereto, as fully and completely as if this stipulation had not been made.

c Paragraph (8)—The foregoing agreements as to the methods of submission and trying this case, are made subject to the approval of this court or judge thereof in vacation.

Done at Kansas City, Mo., August 3d, 1894.

JOHN N. SOUTHERN,
Solicitor and Counsel for Complainant in Error.

L. TRABER,
P. P. KELLEY,
SMITH McPHERSON,
Counsel for Respondent in Error.

Approved: HENRY C. CALDWELL, Circuit Judge.

No. 516. In the———Court. The Church of Christ at Independence, Mo., et al., Appellant, vs. The Re-Organized Church of Jesus Christ of Latter Day Saints, Appellee, Defendant. Stipulation as to Printing Record. Traber, Vandeveer & McNeil, Attorneys for.

Filed August 11, 1894. John D. Jordan, Clerk.

1 United States of America, Sct.

To the Reorganized Church of Jesus Christ of Latter Day Saints—Greeting:

You are hereby cited and admonished to be and appear in the United States Circuit Court of Appeals for the Eighth Circuit, at the city of St. Louis, Missouri, sixty days from and after the day this citation bears date, pursuant to a writ of error filed in the Clerk's office of the Circuit Court of the United States for the Western Division of the Western District of Missouri, wherein The Church of Christ at Independence, Missouri, Richard Hill, Trustee, Richard Hill, Mrs. E. Hill, George Frisbie, Mrs. E. Frisbie, Miss Nannie Frisbie, Daniel Bauder, and G. D. Cole, as members of and doing business under the name of the Church of Christ at Independence, Missouri, plaintiffs in error, and you are defendant in error, to show cause, if any there be, why the judgment rendered against the said plaintiff in error as in said writ of error mentioned should not be corrected, and why speedy justice should not be done the parties in that behalf.

Witness the Honorable John F. Philips, Judge, holding the Circuit Court of the United States for the Western Division of the Western District of Missouri, this eleventh day of June in the year of our Lord one thousand eight hundred and ninety-four.

JNO. F. PHILIPS, Judge.

United States of America,
Western Division of the Western District of
Missouri—ss.

Hereby acknowledge due service of the within Citation this 12th day of June, A. D. 1894.

L. TRABER,
One of the Attorneys for Defendant in Error.

1720. United States Circuit Court, Western District of Missouri, Western Division. Reorganized Church of Jesus Christ of Latter Day Saints, vs. Church of Christ et al. Citation. Filed June 13, 18-4. Adelaide Utter, Clerk.

2 United States of America, Sct.

Be it remembered that heretofore, to-wit, on the 6th day of August, A. D. 1891, there was filed in the office of the Clerk of the Circuit Court of the United States for the Western Division of the Western District of Missouri, a bill of complaint wherein the Re-Organized Church of Jesus Christ of Latter Day Saints is complainant and The Church of Christ of Independence and others, are respondents.

* * * * * * *

32 And afterwards, to-wit, on the 5th day of November, A. D. 1891, an order was made and entered of record in the above entitled cause.

Said order is in words and figures as follows, to-wit:—

In the U. S. Cir. Ct., Kansas City.

The Re-Organized Church of Jesus Christ of Latter Day Saints,
Complainant,
No. 1720. vs.
The Church of Christ et al., Respondents.

By leave of court and according to a stipulation signed by the attorneys of the complainant and the attorney for the respondent, having heretofore answered, duly filed, the complainant has leave to file an amended bill in this cause, on or before the 1st day of December, 1891; and the respondents who have heretofore answered have leave to file answer to the amended bill on or before the 31st day of December, 1891; and the complainant has leave to reply thereto within ten days after the filing thereof; and all costs heretofore incurred in this cause shall be taxed against the complainant as well as the costs attending the filing of the amended bill and the answer thereto.

(Signed) JNO. F. PHILIPS, Judge.

And thereafter, to-wit, on the 30th day of November, A. D. 1891, an amended bill was filed in the above entitled cause.

Said amended bill is in words and figures as follows:

33 In the Circuit Court of the United States, Western District of Missouri, Western Division, at Kansas City.

AMENDED BILL

The Re-Organized Church of Jesus Christ of Latter Day Saints,

vs.

The Church of Christ at Independence, Missouri, Richard Hill, Trustee, Richard Hill, Mrs. E. Hill, C. A. Hall, President, Mrs. C. A. Hall, George Frisbie, Mrs. E. Frisbie, Miss Nannie Frisbie, Daniel Bauder and G. D. Cole, as members of and doing business under the name of the Church of Christ at Independence, Missouri.

To the Honorable the Judges of the Circuit Court of the United States in and for the Western District of Missouri, Western Division:

The Re-Organized Church of Jesus Christ of Latter Day Saints, a corporation organized under and pursuant to the laws of the State of Iowa and having its principal place of business at the town of Lamoni, Decatur County, Iowa, and citizens of said State of Iowa, presents this its bill of complaint against said,

The Church of Christ at Independence, Missouri, a citizen of the State of Missouri,
Richard Hill, Trustee, a citizen of the State of Missouri,
Richard Hill, a citizen of the State of Missouri,
Mrs. E. Hill, a citizen of the State of Missouri,
Mrs. C. A. Hall, a citizen of the State of Missouri,
George Frisbie, a citizen of the State of Missouri,
Mrs. E. Frisbie, a citizen of the State of Missouri,
Miss Nannie Frisbie, a citizen of the State of Missouri,
Daniel Bauder, a citizen of the State of Missouri,

34 G. D. Cole, a citizen of the State of Missouri, and
C. A. Hall, President, a citizen ot the State of Missouri, as members of and doing business under the name of the Church of Christ at Independence, Missouri, an association at Independence, Missouri and a citizen of said State, located at said city of Independence, County of Jackson, and State of Missouri, and all citizens of said State.

And thereupon your orator complains and says that it was incorporated under the laws of the State of Illinois, on the — day of October, 1872, and afterwards, on the — day of June, 1891, it was duly incorporated under the laws of the State of Iowa. The matter in dispute in this action exceeds exclusive of costs and interest the sum of five thousand dollars (5000).

And your orator further shows unto your Honors, that it is the owner in fee simple by title absolute, of the following described real estate lying and situate in the town, now a city of Independence, Missouri, namely: Lots 15, 16, 17, 18, 19, 20 and 21, and the triangular strip north of and adjoining said lot 15, all in Woodson &

Maxwell's addition to the said town, now city of Independence, and known as the Temple Lot, and is entitled to the immediate possession thereof, as well as to the rents and profits and the free enjoyment of said possession and ownership, without let or hindrance by the defendants or any of them; and yet the said defendant have, by unlawful means, entered into possession of said property and the whole thereof, and refuse to surrender the possession thereof to your orator, although such possession has been frequently demanded and as often denied.

And your orator further shows that heretofore the United States Government was the owner of said real estate aforesaid described, and by successive links in the chain of title, which would serve no purpose by being herein pleaded, one Edward Partridge did, December 19, 1832, become the owner of said real estate and the whole thereof by good and sufficient conveyance by fee simple title; the said Partridge taking said property and the title thereof in trust as hereinafter recited, the fact being that both your orator and defendants claim said property by and through the same title from the United States Government to said Partridge, and afterwards on or about the 28th day of March, 1839, the said Edward Partridge, aforesaid mentioned, did by a deed of conveyance, convey said property and the whole thereof to Jane Cowdrey, Joseph Smith Cowdrey, and John Cowdrey, children of one Oliver Cowdrey, in which said deed of conveyance it was recited and stated that the said Edward Partridge held said land in trust for the Church of Latter Day Saints, formerly of Kirtland, in the State of Ohio. He, the said Partridge, having taken the said deed, and bought said property with funds and moneys the property of the said church, and by the said deed of the said Partridge to the said Jane Cowdrey and others it was stated, recited and agreed that the property herein in controversy, was conveyed to the said grantees, therein named, for the use of the Church of Jesus Christ of Latter Day Saints, formerly of Kirtland, Ohio, as aforesaid, your orator herein, which said grantees at the time of such conveyance were minors of tender years, and the said real estate aforesaid was thus conveyed to them in trust as aforesaid and not otherwise.

And afterwards, the time of which your orator cannot state, the said Jane Cowdrey, Joseph Smith Cowdrey and John Cowdrey, each and all died before attaining their majority, dying intestate and without having made out any form for conveyance of said real estate or any part thereof; and the said Oliver Cowdrey, father of the said grantees, died intestate without having made any conveyance of said real estate, or any part thereof, but the time of his death your orator cannot state.

And afterwards, namely, on or about the 29th day of May, 1886, one Elizabeth Ann Cowdrey, the widow of the said Oliver Cowdrey, deceased, and the mother of the said Jane, Joseph Smith and John Cowdrey, aforesaid mentioned, did execute a deed of conveyance to her daughter, Marie Louise Johnson, the only living child of the

said Oliver Cowdrey, aforesaid mentioned, which said deed of conveyance vested in her, the said Marie Louise Johnson, all
36 the title in and to the property now in controversy in so far as she, the said Elizabeth Ann Cowdrey, could, by deed of conveyance, vest said title.

And afterwards, on or about the 9th day of June, 1887, the said Marie Louise Johnson, her husband, Dr. Charles Johnson, joining and concurring, did execute and deliver a deed of conveyance thereby conveying the property now in controversy and the whole thereof to one George A. Blakeslee, Bishop and trustee in trust of the Re-Organized Church of Jesus Christ of Latter Day Saints, your orator herein; which said conveyance was made to the said Blakeslee trustee in trust for the use and benefit of the said church your orator, according to the laws and usages of the same, at which time, the said Blakeslee, as Bishop to your orator, held the legal title of all real estate belonging to your orator.

And your orator further states and shows that on the —— day of——1890, the said George A. Blakeslee died, and one E. L. Kelley has since been elected and appointed by the authorities of your orator as such Bishop.

And notwithstanding said Partridge did, March 25, 1839, execute a deed of trust conveying the property in trust for your orator, to said children Jane, Joseph Smith and John Cowdrey, the said Partridge soon afterward dying, his widow, Lydia Partridge and his three children, Eliza M., Emily D. and Caroline E. Partridge did, May 5, 1848, execute and deliver a pretended quit claim deed and that only of said premises to one James Pool, purporting to convey said premises in controversy to him, the said Pool, although in truth and in fact at the time of the said quit claim conveyance, the widow and children of said Partridge had no ownership in said land, nor any interest in trust as aforesaid, all of which was well known to him, the said Pool, when he took said pretended quit claim deed.

37 And afterwards, viz, August 3d, 1848, the said James Pool by a pretended deed of conveyance did pretend to deed the premises in controversy to one John Maxwell, he at the time knowing said premises were owned by your orator, and he the said Maxwell, at the time of the said conveyance, well knew that the said Edward Partridge aforesaid took and held said premises in trust for your orator.

And September 22nd, 1848, the sheriff of Jackson County, Missouri, on executions in certain judgments against him, the said James Pool, did pretend to sell said real estate to him, the said John Maxwell, at which said time he, the said Maxwell, well knew all the facts aforesaid recited.

And the said Maxwell dying, his heirs did afterwards, to-wit, March 23rd, 1867, by what purported to be a deed, deed said premises now in controversy to one Joseph C. Irwin, he, the said Irwin, taking said deed with full knowledge of all the facts as to said trusts and ownership as aforesaid.

And afterwards, the said Irwin did by a pretended conveyance, purport to convey the said premises to one William Eaton he, the said Eaton, and the said Irwin at the time well knowing that your orator owned said premises and the whole thereof.

And afterwards the said Eaton conveyed said premises in trust to one Granvill Hedrick for the use and in trust for the Church of Christ of Latter Day Saints, which church in truth and in fact, although the name is different, is that of your orator.

And afterwards, the said Granville Hedrick dying, in an ex parte proceeding, the Circuit Court of Jackson County, Missouri, did, in September, 1890, appoint defendant Richard Hill, Trustee, to execute the trust imposed upon him, the said Hedrick, and any and all title and ownership he now has in and to said premises is as the holder in trust for your orator.

38 And your orator further shows that the said Church of Jesus Christ of Latter Day Saints was first regularly organized in the State of New York, in the year 1830, which organization was soon thereafter, namely, in January, 1831, removed to the said town of Kirtland in the State of Ohio, and afterwards, namely, during the year 1832, a branch of said Church was established at Independence, Missouri, another soon after at Far West, Missouri, and another at Nauvoo, Illinois, and your orator now has four hundred branches or local churches with a membership of 25,000 in the United States, besides factions and secessions from the Mother Church or your orator. And your orator has at this time a branch at Independence, Missouri, with a membership of seven hundred persons or more.

And it was while your orator first established its church at Independence, Missouri, that it became the owner of, and possessed of the property in controversy, viz., in 1832, while the faction or split now represented by defendants, was not organized and did not come into existence until the year 1863 or thereabouts.

And your orator further shows that your orator is the same church association, teaching the same teachings, tenets and beliefs as to all spiritual affairs as did the said church association by the name of the Church of Jesus Christ of Latter Day Saints, while at Nauvoo in the State of Illinois, and is the same church in fact, and the same association in fact, excepting that it has since been incorporated as hereinbefore in this bill alleged, and by which re-organization and the incorporation thereof, has taken unto itself the name of your orator, The Re-Organized Church of Jesus Christ of Latter Day Saints, by reason of which it has all times since the year 1832, been the owner of all the real estate in controversy in this action, which said re-organization was believed to be necessary by
39 reason of the fact that about the year 1846, there were splits and differences in said Church, at Nauvoo, Illinois, and the said Mother Church became disorganized and separated into factions or parties one of which disturbing factions retiring, led by Brigham Young, with his followers, left the State of Illinois, first

for the city of Council Bluffs, Iowa, and since thereafter, what for many years has been known as Salt Lake City in the Territory of Utah.

Another faction, led by A. L. Strang, one led by Gladden Bishop, and others led by different men, all located in different parts of the United States. Which factional, seceding and disturbing parties taught new doctrines and beliefs in no wise in harmony with, or consistent to the teachings, tenets and doctrines of the said Mother Church. But that at the time of the said disorganization of and secessions from the said Mother Church, there were large numbers of members and communicants of the said Church who refused to follow the leadership of any of the said factions or secessions, but who still adhered to, taught and believed the original doctrines, teachings and tenets of the Mother Church, and who maintained their branch organizations, as originally made and recognized by the Mother Church in the States of Illinois, Wisconsin and Michigan, which said membership and persons who had from the disorganization of the Mother Church aforesaid, adhered to, taught and obeyed the teachings and tenets of the said Church by common consent and in accordance with the teachings, doctrines, beliefs and faith of the said Mother Church, reorganized the said Church, which re-organization so made by the adherents to the said Mother Church is your orator herein.

That during all the years from the year 1832, the time said land was conveyed to Edward Partridge in trust as hereinbefore pleaded, until the year 1891 inclusive, the said property and all of the same was generally known as and publicly reputed to be Church property, and by all the people of the said town, now city of Independence, as well as other persons, was known and referred to as Church property, and as the "Temple Property" or "Temple Lots". And that all these facts were known to each and all the parties mentioned and referred to in each and all of the pretended deeds of conveyance hereinbefore referred to. That the said property and all of the same from the year 1832 up to the year 1886 inclusive was vacant and unimproved land without occupancy save and except the occupancy and control thereof by your orator herein and was recognized for a great many years by the public authorities whose duties it was to assess and collect taxes, as Church property and not taxable.

That the defendants' Church numbers less than twenty persons, without organization elsewhere than at Independence, Missouri, and it and all defendants deny that all articles adopted by your orator and its authorities after the year 1835 are true or binding, or in any way presents the articles of faith to the Church, and all defendants insist, contrary to the teachings of the Mother Church, that after the year 1834, Joseph Smith, who lost his life in 1844, was a fallen and false prophet, and his teachings to be false and heretical, although Granvill Hedrick, the father of the organization and faction represented by defendants, was a member and preacher

of your orator, or the Mother Church, until the year 1860 or thereabouts.

But your orator and defendants believe in the Bible and the Book of Mormon, while your orator and its members believe in and teach the Book of Doctrine and Covenants of the Church from its organization in the year 1830 to the present day, which is denied by defendants after the year 1834.

And defendants deny the ordinance of baptism for the dead as taught by your orator and the Mother Church.

41 And in this as well as in many other matters, defendants are now and from their organization have been heretical and in opposition to the teachings, tenets and ordinances of the Mother Church, now represented by your orator.

Your orator is wholly without remedy of law, and presents this its bill of complaint to this court for full, adequate and complete relief.

An answer under oath is hereby expressly waived.

And your orator prays that the defendants or respondents may be restrained from any further violation of the said rights of your orator, and prays that your Honors may grant a writ of injunction issuing out of and under the seal of this Honorable Court, perpetually enjoining and restraining the said defendants, their clerks, attorneys, agents, servants, and employes from in any manner or in any method making or attempting to make any conveyance of the said real estate in this bill described or any part thereof, or from in any manner placing or making any incumbrance or lien on or against the said property or on any part thereof; and from doing any other act in any way changing the apparent title or ownership of record or otherwise in the said real estate.

And that upon final hearing the said writ of injunction be made perpetual and that all interests owned or claimed by defendants or any of them, be declared to be held in trust for your orator, and that it and they and each of them be decreed to convey all title claimed by them to your orator.

And that upon final hearing your orator may have a decree declaring and reciting that said real estate and the whole thereof belongs to and is the property of your orator, free and clear of all rights, claims and interests of the defendants or any of them, and for such other and further relief as the equities of the case may require and to your Honors may seem meet.

42 May it please your Honors to grant for it, your orator, not only a writ of injunction conformable to the prayer of this bill, but also a writ of subpoena, of the United States of America directed to the said Church of Christ, at Independence, Missouri, and the said Richard Hill, Trustee, and the said Richard Hill, Mrs. E. Hill, C. A. Hall, President, George Frisbie, Mrs. E. Frisbie,

Miss Nannie Frisbie, Daniel Bauder, G. D. Cole, commanding them, on the day certain, to appear and answer unto this bill of complaint, and to abide and perform such order and decree in the premises as to the court shall seem proper, and required by the principles of equity and good conscience.

P. P. KELLEY,
S. McPHERSON,
L. TRABER, and
GEORGE EDMONDS.

Solicitors for Complainant and of Counsel for the Re-Organized Church of Jesus Christ of Latter Day Saints.

And afterwards, to wit, on the 7th day of December, A. D. 1891, an answer to amended bill was filed.

Said answer is in words and figures as follows, to wit:—

Circuit Court of the United States, Western District of Missouri, Western Division at Kansas City.

ANSWER TO AMENDED BILL.

The Re-Organized Church of Jesus Christ of Latter Day Saints, Plaintiff,

vs.

The Church of Christ at Independence, Missouri, Richard Hill, Trustee, Richard Hill, Mrs. E. Hill, C. A. Hall, President, Mrs. C. A. Hall, George Frisbie, Daniel Bauder, G. D. Cole, as members of and doing business under the name of the Church of Christ at Independence, Missouri, Defend-
43 ant.

To the Honorable the Judge of the Circuit Court of the United States in and for the Western Division of Missouri, Western District.

The answer of the Church of Christ at Independence, Missouri, a citizen of the State of Missouri; Richard Hill, Trustee, a citizen of the State of Missouri; Richard Hill, a citizen of the State of Missouri; Mrs. E. Hill, a citizen of the State of Missouri; Mrs. C. A. Hall, a citizen of the State of Missouri; George Frisbie, a citizen of the State of Missouri; Mrs. E. Frisbie, a citizen of the State of Missouri; Daniel Bauder, a citizen of the State of Missouri; C. A. Hall, President, a citizen of the State of Missouri; as members of and doing business under the name of the Church of Christ at Independence, Missouri, an association at Independence, Missouri, and a citizen of said State, located in said city of Independence, County of [Jackson] and State of Missouri some of the defendants to the amended bill of complaint of the Re-Organized Church of Jesus Christ of Latter Day Saints.

The said defendant now and at all times hereinafter reserving all manner of benefits and advantage of exception to the many errors

and insufficiencies in said amended bill contained for answer thereto or unto so much or such parts thereof as they are advised are material for them to make answer unto, they answer and say:

That they have no knowledge or information that the said complainant styled the Re-Organized Church of Jesus Christ of Latter Day Saints was incorporated under the laws of the State of Illinois on the—day of October, 1872, or afterwards on the—day of June, 1891, it was duly or at all incorporated under the laws of the State of Iowa, and on that ground deny that the said complainant styled the Re-Organized Church of Jesus Christ of Latter Day
44 Saints was incorporated under the laws of the State of Illinois on the — day of October, 1872, or that afterwards, on the — day of June, 1891, it was duly or at all incorporated under the laws of the State of Iowa, and leave the complainant to its proof.

Defendants deny that the State of Iowa or the State of Illinois has any power to confer or did confer upon the complainant any right or power to hold or control real property for church purposes or any purpose in the State of Missouri, and that such alleged corporation is authorized to take control of or exercise any authority or power over the property which it seeks to recover from defendant.

Admit, That the matter in dispute in this action exceeds inclusive of interest and costs, the sum of five thousand ($5,000.00) dollars.

Deny, That the complainant styled the Re-Organized Church of Jesus Christ of Latter Day Saints, is the owner of in fee simple title absolute or otherwise of the following described real estate, lying and situate in the town, now a city of Independence, Missouri, namely:

Lots 15, 16, 17, 18, 19, 20, 21 and 22 or any part thereof, all in Woodson & Maxwell's addition to the said town, now city of Independence, and known as the Temple Lot or otherwise, or is entitled to the immediate or otherwise possession thereof, or to the rents or profits or the free enjoyment of the said possession or ownership without let or hindrance by the defendants or any of them, or that the said defendants have by unlawful means entered into possession of said property or any part thereof, as alleged but on the contrary allege that said defendants are the owners in fee simple by title absolute of said real estate and the whole thereof, and are entitled to immediate possession thereof as well as the rents and
45 profits and the free enjoyment of said possession and ownership without let or hindrance by the said complainants or any other person.

Deny, That complainant has commanded defendants to surrender the possession of the said property, to the said complainant or any other person.

Admit, That heretofore the United States Government was the owner of said real estate as aforesaid, described, and that by successive links in the chain of title which would serve no purpose by

being herein pleaded, one Edward Partridge did December 19, 1832, become the owner of said real estate and the whole thereof by good and sufficient conveyance by fee simple title.

Deny, That said Partridge took said property or the title thereto in trust as in said bill of complaint recited, or that he took the same otherwise in trust.

Deny, That afterwards, on or about the 28th day of March, 1839, or at any other time the said Edward Partridge aforesaid mentioned did by deed of conveyance convey said property or any part thereof to Jane Cowdrey, Joseph Smith Cowdrey and John Cowdrey, children of one Oliver Cowdrey, or to any of them, or that in said alleged deed of conveyance it was recited or stated that said Edward Partridge held the said land in trust for the children of Latter Day Saints formerly at Kirtland, in the State of Ohio, as alleged or otherwise, or that the said Partridge took the said deed or bought the said property with funds or moneys the property of said church, or that by the said alleged deed of the said Edward Partridge, to the said Jane Cowdrey and others, it was stated, recited or agreed that the property herein in controversy was conveyed to the said grantees therein named for the use of the children of the Latter Day Saints formerly of Kirtland, Ohio, or for the Church of Jesus Christ of Latter Day Saints, at Kirtland, Ohio, as in said bill
46 of complaint alleged or otherwise, or that said alleged grantees or any of them at the time of the said alleged conveyance, were minors of tender years or that said real estate aforesaid was conveyed to them or either of them in trust as alleged or otherwise.

Allege, That the said defendants have no knowledge or information that afterwards, the said Jane Cowdrey, Joseph Smith Cowdrey and John Cowdrey each or any of them died before attaining their majority or that they died intestate or without having made at any time any conveyance of said real estate or any part thereof or that the said Oliver Cowdrey, father of the said alleged grantees, died intestate without having made any conveyance of said real estate or any part thereof as alleged, and on that ground,

Deny, That afterwards the said Jane Cowdrey, Joseph Smith Cowdrey and John Cowdrey, each or any of them died before attaining their majority or that they died intestate or without having made at any time any conveyance of said real estate or any part thereof, or that the said Oliver Cowdrey, father of the said alleged grantees, died intestate without having made any conveyance of said real estate or any part thereof, and leave the complainant to its proof.

Admit, That afterwards, namely on or about the 29th day of May, 1886, one Elizabeth Ann Cowdrey, executed a deed of conveyance to her daughter, Marie Louise Johnson.

Allege, That said respondents have no knowledge or information that said Elizabeth Ann Cowdrey was at said time the widow of said

Oliver Cowdrey, deceased, or the mother of said Jane Cowdrey, or Joseph Smith Cowdrey or John Cowdrey aforesaid mentioned,
47 or that said Marie Louise Johnson was at said time or is now the only living child of said Oliver Cowdrey aforesaid mentioned, and on that ground,

Deny, That said Elizabeth Ann Cowdrey was at the said time the widow of the said Oliver Cowdrey, deceased, or the mother of the said Jane Cowdrey, Joseph Smith Cowdrey or John Cowdrey, or that the said Marie Louise Johnson was at said time or is now the only living child of said Oliver Cowdrey, aforesaid mentioned, and leave the complainant to its proof.

Deny, That by said deed of conveyance from said Elizabeth Ann Cowdrey to said Marie Louise Johnson, there was conveyed any title or interest in the said property in controversy to said Marie Louise Johnson as alleged, or otherwise.

Admit, That afterwards, on or about the 9th day of June, 1887, the said Marie Louise Johnson, her husband, Dr. Charles Johnson, joining and concurring, did execute and deliver a deed of conveyance to one George A. Blakeslee, Bishop and Trustee in trust of the Re-Organized Church of Jesus Christ of Latter Day Saints, and that said conveyance was made to the said Blakeslee trustee in trust for the use and benefit of said church according to the laws and usages of the same.

Deny, That said deed of conveyance from said Marie Louise Johnson and her husband to said George A. Blakeslee, Bishop and Trustee as above stated, did convey the property now in controversy or any part thereof or any interest therein to said George A. Blakeslee, Bishop and Trustee in trust of the Re-Organized Church of Jesus Christ of Latter Day Saints, as alleged in said bill of complaint or otherwise.

Allege, That said defendants have no knowledge or information that said Blakeslee as Bishop to the said complainant, held
48 the legal title of all or any part of the real estate belonging to the said complainant or that on the —— day of —— 1890, the said George A. Blakeslee died or that one E. L. Kelley has since been elected or appointed by the authority of said complainant or otherwise as such Bishop as alleged, and on that ground,

Deny, That said Blakeslee, as Bishop to the said complainant holds the legal title of all or any part of the real estate belonging to the said complainant, or that on the —— day of —— 1890, the said George A. Blakeslee died, or that one E. L. Kelley has since been elected or appointed by the authority of complainant or otherwise as alleged, and deny that either said Blakeslee or said Kelley or complainant ever held or does now hold any title legal or equitable to said property to their own use or to the use of any party whomsoever.

Admit, That prior to May 5th, 1848, the said Edward Partridge died,

and that on May 5th, 1848, Lydia Partridge, widow of said Edward Partridge and Eliza M. Partridge, Emily D. Partridge and Caroline E. Partridge, children of said Edward Partridge, deceased, executed and delivered a deed to one James Pool, purporting to convey to him said premises in controversy. But allege that said deed is a deed of bargain and sale and that at the time of the execution thereof, the said grantors were in the adverse, exclusive, open, hostile, adverse and notorious possession of said land and delivered the same to said Pool.

Deny, That at the time of the execution of the said deed of conveyance, the said widow and children of the said Edward Partridge had no ownership in said land or any interest therein or that they never had, or that their ancestors never had an
49 ownership in said land except in trust as alleged, or that said Pool had knowledge that his grantors or Edward Partridge had no ownership or interest in said land except in trust as alleged at the time he took said deed, or at any other time, but on the contrary,

Allege, That said James Pool was a bona fide purchaser of said premises in good faith paying therefor to the said Lydia Partridge and Eliza M. Partridge and Emily D. Partridge and Caroline E. Partridge, children of the said Edward Partridge, and grantors as aforesaid, the sum of three hundred dollars, and had no notice of any claim or ownership or otherwise in said property or any other than his said grantors, and that said deed was duly recorded in the office of the County Recorder of Jackson County, Missouri, June 16th, 1848, in Book "N" page 203.

Admit, That afterwards, on or about August 3rd, 1848, the said James Pool by deed of conveyance did deed the premises in controversy to one John Maxwell, and allege that thereupon the said John Maxwell went into the immediate possession thereof.

Deny, That at said time or at any other time, said John Maxwell grantee as above stated, had knowledge that said premises were owned by the complainant, herein, or that said Edward Partridge took or held said premises in trust for said complainant, or any other person but that on the contrary, allege that said John Maxwell grantee as aforesaid, was a bona fide purchaser of said premises in good faith, paying said James Pool therefor the sum of six hundred dollars, and that he, the said Maxwell, had no notice of any claim of ownership or claim of any other nature in said property, other than his said grantor and that said deed was duly recorded August 30th, 1848, in the office of the County Recorder of Jackson County, Missouri, in Book "N" page 273, and that he, the said John
50 Maxwell, thereupon took possession thereof and held the open, notorious, continuous, exclusive, actual, hostile and adverse possession of the same until the same was conveyed as hereinafter alleged.

Admit, That on September 22, 1848, the sheriff of said Jackson County, on execution under certain judgments against said James

Pool, did sell said real estate to said John Maxwell, and said respondents further allege that said sheriff did on March 24th, 1849, execute a deed to said John Maxwell, of said premises, who was a bona fide purchaser of said premises in good faith, paying said sheriff therefor the sum of thirteen hundred and fifteen dollars, which said deed was duly recorded in the office of the County Recorder of Jackson County, Missouri, April 18th, 1849, in Book "O" page 99.

Deny, That said John Maxwell at the time of said purchase from the sheriff aforesaid had any knowledge of any claim of any one in said premises other than his own, and the interest that he purchased from the said sheriff.

Allege, That one Joseph C. Irwin purchased all the interest of the heirs of John Maxwell, then deceased, in all of said lots 17, 18, 19, and 22 in Woodson and Maxwell's addition to the city of Independence, on the 15th day of September, 1859, and thereupon received actual and immediate possession thereof and held the open, hostile, actual, notorious, exclusive, continuous, and adverse possession thereto until the 9th day of July, 1873, and received a deed therefor March 23rd, 1867, conveying from said heirs to him the title in fee to said lots and that said deed was duly recorded in the office of the County Recorder of Jackson County, Missouri, December 8, 1870, in Book 82, page 255, but

51 Deny, That he, the said Irwin, purchased any other part of said premises and also deny that he had any knowledge of any claim of any one except the interest he then and there purchased, but on the contrary allege that said Irwin was a bona fide purchaser of said lots, numbered, 17, 18, 19 and 22, in good faith paying therefor the sum of two thousand dollars and seventy-seven cents.

Allege, That one Thomas H. Swope purchased all interest of the heirs of said John Maxwell, then deceased, in said lots numbered 21 in said Woodson & Maxwell's addition to the city of Independence, on the 15th day of September, 1859, and thereupon received actual and immediate possession thereof, and held the actual, open, hostile, notorious, exclusive, continuous and adverse possession thereof until he conveyed the same and received a deed therefor March 16th, 1867, which said deed was duly recorded in the office of the County Recorder of Jackson County, Missouri, May 14th, 1867, in Book 52 page 68, and that said Swope was a bona fide purchaser of said lot 21 in good faith, paying therefor the sum of three hundred and eighty dollars, and that said deed conveyed to him the title in fee.

Allege, That one John Montgomery purchased all the interest of the heirs of said John Maxwell, then deceased, in said lot 20 in Woodson & Maxwell's addition to the city of Independence, on the 15th day of September, 1859, and thereupon received actual and immediate possession thereof, and held the actual, open, hostile, notorious, exclusive, continuous and adverse possession thereof until September 24th, 1857, and received a deed therefor September 9, 1867, which said deed was duly recorded in the office of the County Recorder of Jackson County, Missouri, September 30, 1868,

in Book 62, page 461, and that said Montgomery was a bona fide purchaser of said lot 20, in good faith, paying therefor
52 the sum of one hundred and six dollars and that said deed conveyed from said heirs to him the title in fee to said lot.

Allege. That prior to the 27th day of November, 1860, one Samuel H. Woodson, and Margaret J. Woodson, his wife, purchased said lot 15 in Woodson & Maxwell's addition to the city of Independence, but the exact date of said purchase is unknown, to said defendants, and on the said 27th day of November, 1860, and for some time prior thereto, was in actual, open, hostile, continuous, exclusive, notorious and adverse possession thereof.

Allege, On information and belief that prior to the 27th day of November, 1860, one John Kelly purchased said lot 16 in Woodson & Maxwell's addition to the city of Independence, Missouri, (but the exact date of said purchase is unknown to defendants) and thereupon went into the immediate, actual and exclusive possession thereof, and held the actual, hostile, notorious, exclusive, open, continuous, and adverse possession thereof until his death.

Admit, That afterwards, the said Irwin by a conveyance conveyed said lots 17, 18, 19 and 22 of Woodson & Maxwell's addition to the city of Independence, to one William Eaton, but deny that any other part of said premises were purported to be conveyed by said Irwin or that said Eaton had any knowledge of any claim or ownership or otherwise of said complainant or any other person to said lots 17, 18, 19 and 22, or any part thereof but on the contrary allege that said William Eaton was a bona fide purchaser of said lots 17, 18, 19 and 22 of Woodson & Maxwell's addition to the city of Independence in good faith paying therefor the sum of five hundred and twenty-five dollars on the 9th day of July, 1873, at which time he received a deed therefor, conveying to him a title thereto, in fee,
53 which said deed was duly recorded in the office of the County Recorder of Jackson County, July 11th, 1873, in Book 104 page 311, and held the actual, open, hostile, continuous, exclusive, notorious and adverse possession thereof until the 5th day of November, 1877.

Allege, That on or about the 23d day of November, 1860, one Samuel H. Woodson and his wife Margaret J. Woodson, being then in possession of said lot 15, in Woodson & Maxwell's addition to the city of Independence, claimed to be and who were the absolute owners of said lot did by warranty deed convey in fee to Adolphus Kean and Susan Kean all of said lot 15, and said grantees Adolphus Kean and Susan Kean were bona fide purchasers of said lot 15 at said time in good faith paying therefor the sum of one hundred and fifty dollars, and went into and held the immediate, actual, open, hostile, continuous, adverse and exclusive possession thereof, and said deed was duly recorded in the office of the County Recorder of Jackson County, Missouri, November 27th, 1860, in Book 36, page 240, and that afterwards Adolphus Kean having died said William Eaton purchased said lot 15 in Woodson & Maxwell's addition to the

city of Independence, from Maria McClanahan, mother of Adolphus Kean and Susan Nelson, nee Susan Kean, and sister of Adolphus Kean, receiving a warranty deed conveying in fee to said Eaton said lot 15 on March 7, 1874, which said deed was duly recorded in the office of the County Recorder of Jackson County, Missouri, March 7th, 1874, in Book 104 page 517; that said William Eaton was at the said time a bona fide purchaser of said lot 15, in good faith, paying said McClanahan and Nelson therefor the sum of two hundred dollars and went into the immediate possession and held the open, actual, hostile, continuous, exclusive, notorious, and adverse possession thereof until the 5th day of November, 1877.

54 Allege, That on or about the 13th day of May, 1856, said Thomas H. Swope conveyed to one Jacob Tindell all of said lot 21 in Woodson & Maxwell's addition to the city of Independence and that said Tindell was a bona fide purchaser of said lot 21, in good faith paying therefor the sum of two hundred and fifty dollars, said deed being duly recorded in the office of the County Recorder of Jackson County, June 4th, 1866, in Book 47, page 129, and thereupon went into the immediate possession thereof, and held the open, actual, hostile, notorious, continuous, exclusive and adverse possession of the same until the 22d day of August, 1867.

Allege, That on or about the 22nd day of August, 1867, said Jacob Tindell, by good and sufficient deed conveyed to one John H. Hedrick in fee all of said lot 21, in Woodson & Maxwell's addition to the city of Independence, and that said John H. Hedrick was a bona fide purchaser of said lot 21 in good faith paying therefor the sum of two hundred and fifty dollars, said deed being recorded in said office of the County Recorder of Jackson County, September 24th, 1867, in Book 50, page 331, and thereupon went into the immediate possession thereof, and held the open, actual, hostile, notorious, exclusive, continuous and adverse possession thereof until November, 8th, 1869.

Allege, That on or about the 24th day of September, 1867, said John Montgomery by deed conveyed in fee to one John H. Hedrick all of said lot 20 in Woodson & Maxwell's addition to the city of Independence, and that said John H. Hedrick was a bona fide purchaser of said lot 20 at said time in good faith, paying therefor the sum of two hundred and fifty dollars, and said deed being duly recorded in the office of the County Recorder of Jackson
55 County, Missouri, September 24th, 1867, in Book 50, page 332, and he thereupon went into the immediate and actual possession thereof and held the open, actual, hostile, continuous, notorious, exclusive and adverse possession of the same until the 8th day of November, 1869.

Allege, That on or about the 5th day of September, 1867, the said John Kelly having died, proceedings were had in the Probate and Common Pleas Court for Probate business for Jackson County, Missouri, and the said lot 16 of Woodson & Maxwell's addition to the city of Independence, was duly and lawfully sold as a portion of

the estate of said John Kelly deceased, to said John H. Hedrick, he being a bona fide purchaser paying in good faith therefor the sum of two hundred and fifty dollars and receiving on the 12th day of December, 1867, a deed therefor, conveying to him the title in fee, which was duly recorded in the office of the County Recorder of Jackson County, Missouri, December 12, 1867, in Book 53, page 526, and he thereupon went into the actual and immediate possession thereof and held the open, actual, hostile, notorious, exclusive, continuous, and adverse possession thereof, until November 8th, 1869.

Admit, That said William Eaton and wife conveyed lots 15, 17, 18, 19 and 22 of Woodson & Maxwell's addition to the city of Independence to one Granville Hedrick, trustee in trust for the Church of Christ.

Deny, That said Church of Christ is the complainant herein as alleged, but on the contrary allege that said Granville Hedrick with the money of defendants, at their instance, and request, purchased said lots 15, 17, 18, 19 and 22 of Woodson & Maxwell's addition aforesaid from the said William Eaton and wife, as trustee in trust for the Church of Christ the defendants herein on the 5th day of November, 1877, which said Church of Christ the defendants herein were bona fide purchasers of said lots 15, 17, 18, 19 and 22 of Woodson & Maxwell's addition aforesaid, at the last named date in
56 good faith, paying said William Eaton and wife therefor the sum of four hundred and twenty-five dollars and received a deed therefor which conveyed to said Granville Hedrick the title in fee in trust for defendants which is recorded in the office of the County Recorder of Jackson County, Missouri, November 6, 1877, in Book 115, page 452, and the said Church of Christ defendants herein received possession of said lots 15, 17, 18, 19 and 22 on said 5th day of November, 1877, under said deed, and have actually, openly, notoriously, exclusively, hostilely, and adversely continued to occupy and enjoy the possession of the same, against the claims of all persons.

Allege, That on the 8th day of November, 1869, the said John H. Hedrick and wife, Elizabeth Ann Hedrick, by deed of conveyance conveyed in fee to said Granville Hedrick as trustee in trust for the Church of Christ, defendants herein; all of lots 16, 20, and 21, in Woodson & Maxwell's addition to the city of Independence, in the County of Jackson, Mo., which said Church of Christ, defendants herein, were bona fide purchasers of said lots 16, 20, and 21, in Woodson & Maxwell's addition to the city of Independence, on the 5th day of November, 1869, in good faith paying the said John H. Hedrick and wife therefor the sum of seven hundred and fifty dollars money of the Church of Christ, defendants herein, which said deed was recorded in the office of the County Recorder of Jackson County, Missouri, November 12, 1869, in Book 73, page 1, and said Church of Christ, defendants herein, received possession of said lots 16, 20 and 21, in Woodson & Maxwell's addition to the city of Independence, on the said 8th day of November, 1869, and has actually,

openly, notoriously, exclusively, hostilely, adversely, continued to occupy and enjoy the possession of the same against the claims of all persons.

57 Admit, That afterwards, the said Granville Hedrick dying, on ex parte proceedings the Circuit Court of Jackson County, Missouri, did in September, 1890, appoint defendant Richard Hill trustee to execute the trust imposed by said deed from John Hedrick and wife and from William Eaton and wife on said Granville Hedrick.

Deny, That all title and ownership or that any title or ownership which said defendant Richard Hill has now in said premises is held by him in trust for the Re-Organized Church of Jesus Christ of Latter Day Saints, styled complainants herein, as alleged or otherwise, but on the contrary allege that the said Richard Hill holds said title in trust for the Church of Christ, defendant herein.

Deny, That the Church of Jesus Christ of Latter Day Saints was first regularly organized in the State of New York in the year 1830, or that the same was soon thereafter, namely, in January, 1831, removed to the town of Kirtland, in the State of Ohio, or afterwards, namely, in the year 1832, a branch of said church was established at Independence, Missouri, or another soon thereafter at Far West, Missouri, or another at Nauvoo, Illinois.

Allege, That defendants have no knowledge or information that the complainant has four hundred branches or local churches or that it has a membership of 25,000 in the United States, besides factions or secessions from the Mother Church or complainant, or that complainant at this time has a branch at Independence, Missouri, with a membership of seven hundred persons or more, and on that ground,

Deny, That said complainant has four hundred branches or churches, or that it has a membership of 25,000 in the United States, besides factions or secessions from the Mother Church or the complainant, or that complainant at this time has a branch at Independence, Missouri, with a membership of seven hundred persons
58 or more, and leave the complainant to its proof.

Deny, That said complainant is the same church association or that it teaches the same teachings or tenets or belief as to all spiritual affairs as did the said alleged church association by the name of the Church of Jesus Christ of Latter Day Saints, while at Nauvoo in the State of Illinois, or that complainant is the same association in fact or that it has since been incorporated as in complainant's bill of complaint alleged, or that by which re-organization or incorporation thereof it has taken unto itself the name of the complainant the Re-Organized Church of Jesus Christ of Latter Day Saints, or that by reason of which allegation in the said bill of complaint it has at all times since the year 1832, been the owner of all or any real estate in controversy, in this action as alleged, or otherwise, but on the contrary allege, that said Re-Organized

Church of Jesus Christ of Latter Day Saints, did not have an existence as a church or association prior to the year 1851.

Deny, That it was rendered necessary for complainants to re-organ'ze about the year 1846, because there was splits and divisions in said complainant's church at Nauvoo, Illinois, as alleged, and that complainants did re-organize.

Deny, That one faction of the church which plaintiff assumes to represent retired therefrom led by Brigham Young, went from the State of Illinois to Council Bluffs, thence to Salt Lake City, and that said Brigham Young and his followers were a faction or seceding party from said church, and that another faction, led by A. L. Strang, and another led by Galden Bishop, and others led by other men located in different parts of the United States, and taught doctrines and beliefs not in harmony with the teachings, tenets and doctrines of the Mother Church, and deny that
59 the church which the plaintiff assumes to represent had any mother church or organization whatever, prior to the time of the alleged secessions and divisions in 1846, and deny that it was composed after said alleged secession and division of those who held to the same doctrine and the same system of organization as did the Church of Jesus Christ of Latter Day Saints as originally constituted.

Defendants allege that said Church of Jesus Christ of Latter Day Saints is identical with the church that was led by Brigham Young and by him located in Utah Territory, and believing the same doctrines, tenets and teachings as were practiced by the same church at Nauvoo at Illinois, including the doctrines of tithing, baptism for the dead and polygamy.

Defendants further allege that after the great body of said Church of Jesus Christ of Latter Day Saints removed as aforesaid from Council Bluffs, Iowa, to Utah Territory, a small number thereof remaining behind separated themselves from the church aforesaid, some following J. J. Strang, others W. B. Smith and others Sydney Rigdon, and others other factional leaders and that from dissenters from these the so-called Re-Organized Church of Jesus Christ of Latter Day Saints was constituted. That in one form or another it has [propagated] a combination of tenets and doctrines peculiar to its organization by and through a system unknown to adherents of the Church of Jesus Christ of Latter Day Saints, from which it claims to have descended, as from a mother and from Joseph Smith, Sr., as a father, who inculcated and practiced polygamy, a tenet which said Re-Organized Church of Jesus Christ of Latter Day Saints at least publicly repudiates.

Defendants deny that Edward Partridge took the title to said land in trust for the Church of Jesus Christ of Latter Day Saints or in trust at all and deny that any one since that time has held said property in trust for said church or for any descendant or
60 successor thereof.

Deny, That plaintiff ever exercised any ownership or con-

trol over said property and deny that it has been recognized by the public authorities as church property, and not taxable but aver that defendant's church by its members and its trustee, has for more than twenty years held the possession thereof and (paid the taxes thereon) openly, notoriously, actually and adversely to all the world.

Deny, That said Church of Christ numbers less than twenty persons or that they are without organization elsewhere than in Independence, Missouri.

Admit, That defendants do not consider any of the articles adopted by the complainant or its authority after the year 1835, are binding upon them, and further allege that said Church of Christ defendant herein, was at the time of receiving said property now in controversy, an association entirely independent of, and had no connection with said complainant and that said Church of Christ defendant herein, never had and has not now any connection with said complainant herein.

Deny, That one Granville Hedrick was the father of the organization represented by defendants herein or that [that] the said Granville Hedrick was a member or preacher of the complainant until the year 1860, or thereabouts, or at all, as alleged or otherwise.

Admit, That defendants believe in the Bible and Book of Mormon, and allege that they also believe in the Revelations given prior to the 24th of February, 1834, contained in the Book of Doctrine and Covenants, so far as they are in harmony with the teachings of the Bible and Book of Mormon.

61 Deny, That said Re-Organized Church of Jesus Christ of Latter Day Saints or complainants herein believe in all the revelations of the Doctrine and Covenants as alleged.

Deny, That said complainant styled the Re-Organized Church of Jesus Christ of Latter Day Saints, is the Mother Church, or that it represents the Mother Church as alleged or otherwise.

And the said defendants submit to the Honorable Court that all and every of the matters in said complainant's bill mentioned, and complained of are matters which may be tried and determined at law, and with respect to which said complainant is not entitled to any relief in a Court of Equity; and these defendants hope that they shall have the same benefits of this defense as if they had demurred to said Bill of Complaint.

And these defendants deny all unlawful combinations in said bill charged, without this, that any other matter or thing material for them to make answer to and not herein sufficiently answered, avoided or denied is true to the knowledge or belief of the defendants, and which matters and things these said defendants are ready to aver and prove, as this court shall direct, and prays to be hence dismissed with their reasonable costs and charges in this behalf most wrongfully sustained.

JOHN N. SOUTHERN,

Solicitor for defendant the Church of Christ, Richard Hill, Trustee,

Richard Hill, Mrs. E. Hill, Mrs. C. A. Hall, George Frisbie, Mrs. E. Frisbie, Daniel Bauder, and C. A. Hall, President.

RICHARD HILL, Trustee,
RICHARD HILL,
ELIZABETH HILL,*
DANIEL S. BAUDER,
MRS. C. A. HALL,
C. A. HALL, President,
E. A. FRISBEY.

And afterwards, to wit, on the 16th day of December, A. D. 1891, a replication was filed in the above entitled cause.

62 Said replication is in words and figures as follows:

In the Circuit Court of the United States, Western District of Missouri, Western Division at Kansas City.

The Re-Organized Church of Jesus Christ of Latter Day Saints,

vs.

The Church of Christ at Independence, Missouri, Richard Hill, Trustee, Richard Hill, Mrs. E. Hill, C. A. Hall, President, Mrs. C. A. Hall, George Frisbie, Daniel Bauder, G. D. Cole, as members of and doing business under the name of the Church of Christ at Independence, Missouri, Defendants.

Replication of Complainant in the above cause to the Answer of the Church of Christ at Independence, Missouri, Richard Hill, Trustee, Richard Hill, Mrs. E. Hill, C. A. Hall, President, Mrs. C. A. Hall, George Frisbie, Daniel Bauder, G. D. Cole, Defendants.

This repliant saving and reserving all advantage of exception to the manifold insufficiencies of said answer, for replication thereto, says:

That it will aver and prove its said bill to be true and sufficient and that the said answer is untrue and insufficient.

Wherefore complainant prays relief as in its said amended bill set forth.

P. P. KELLEY, S. McPHERSON,
L. TRABER, and GEO. EDMUNDS,
Attorneys for Complainant.

* * * * * * * * * * * * *

65 And afterwards, to-wit, on the 8th day of March, A. D. 1892, an order was made and entered of record in the above entitled cause.

Said order is in words and figures following:

United States of America,
Western Division of the Western District of Missouri—Set.

In the Circuit Court of the United States, for the Western Division of the Western District of Missouri, March Term, A. D. 1892.

Tuesday, March 8th, 1892.

The Re-Organized Church of Jesus [Christ] of Latter Day Saints,
against
The Church of Christ at Independence.

In pursuance of a stipulation of counsel this day filed, it is ordered that John M. Orr, Esq., of Kansas City, Mo., be appointed a
66 special examiner of this court to take testimony in the above entitled cause at Great Salt Lake City, Utah Territory, and at such other places in Utah or Colorado as either party may desire to take between the 10th day of March and the 15th day of April, 1892. Said testimony to be taken at such time and places as has or may be agreed upon or as may be designated by notice given according to law.

(Signed) JNO. F. PHILIPS, Judge.

And afterwards, to-wit, on the 6th day of February, A. D. 1894, the following entry appears of record in the above entitled cause:

The Re-Organized Church of Jesus Christ, &c.,
1720 against
The Church of Christ at Independence et al.

This day this cause came on to be heard on final hearing, the complainant appeared by P. P. Kelley, L. Traber, George Edmunds and E. L. Kelley, and the respondents by John N. Southern; thereupon the complainant filed a motion in words and figures as follows, to-wit:

In the Circuit Court of the United States, for the Western District of Missouri, at Kansas City.

The Re-Organized Church of Jesus Christ of Latter Day Saints,
Complainants,
vs. Equity.
The Church of Christ at Independence et. al.

The plaintiff moves the court for leave to amend its bill filed in this cause as follows:

In paragraph 3 by striking out the words, "in fee simple by title absolute" after the word "owner" and before the word "of" and by inserting before the word "owner" the word "equitable."

67 Also by inserting "lot 22" and striking out "the triangular strip north of lot 15, the same being disclaimed by defendants.

Also insert in the 18th paragraph after the word "Nauvoo" the words "that between the years 1844 and 1846 there were splits and differences in said church at Nauvoo."

And states that the words in paragraph 3 asked to be stricken out, viz., "in fee simple by title absolute" was put into the bill by inadvertence and not by design to mislead and this application is not made for vexation or delay; that second proposed amendment is consented to by the defendant and the third amendment proposed is asked because by inadvertence the time of disintegration is stated as being 1846, while in fact the splits commenced in 1844 and continued until 1846.

Complainant submits herewith its proposed amendment.

KELLEY, McPHERSON, KELLEY,
TRABER & EDMUNDS,
Solrs. for Complt.

State and Western District of Missouri at Kansas City—ss.

P. P. Kelley being duly sworn says that the facts stated in the foregoing motion are true and further saith not.

P. P. KELLEY.

Subscribed and sworn to before me Feb'y 6th, 1894.

[Seal] ADELAIDE UTTER,
Clerk U. S. Cir. Court.

Petition granted and amendment by supplement allowed.

(Signed) JNO. F. PHILIPS, Judge.

Said amended bill is in words and figures following:

In the Circuit Court of the United States for the Western District of the State of Missouri, Kansas City.

AMENDED AND SUPPLEMENTAL BILL OF COMPLAINT.

The Re-Organized Church of Jesus Christ of Latter Day Saints, Complainants,

vs.

The Church of Christ at Independence et al., Defendants.

Complainant by way of amendment and supplement:

The complainant for amendment to its amended bill of complaint, says that at paragraph 3 of said amended bill after the word "owner" and before the word "of" strike out the words "in fee simple by title absolute" and after the word "the" in the first line of said paragraph 3 and before the word "owner" insert the word "equitable."

68 In the 18th paragraph after the words, "which said re-organization was believed to be necessary by reason of the fact that about the year 1846" there were splits and differences in the said church at Nauvoo" insert "that between the years 1844 and 1846 there were splits and differences in said church at Nauvoo."

In paragraph of said amended bill insert "lot 22" and strike out "the triangular strip north of and adjoining said lot 15," the same being disclaimed by defendants.

GEO. F. EDMUNDS, P. P. KELLEY, E. L. KELLEY,
L. TRABER and S. McPHERSON,
Solicitors for Complainant.

And thereafter, to-wit, on the 7th day of February, A. D. 1894, the following entry appears of record in the above entitled cause:

Re-Organized Church of Jesus Christ of Latter Day Saints,
1720 against
The Church of Christ at Independence et al.

This day again comes the parties by their solicitors and further arguments are heard and this cause is submitted to the court and by the court taken under advisement.

And thereafterwards, to-wit, on the 3d day of March, A. D. 1894, the following decree was rendered in the above entitled cause:

In the Circuit Court of the United States for the Western Division of the Western District of Missouri.

The Re-Organized Church of Jesus Christ of Latter Day Saints, Complainants,

vs.

69 The Church of Christ at Independence, Missouri, Richard Hill, Trustee, Richard Hill, Mrs. E. Hill, C. A. Hall, George Frisbie, Mrs. E. Frisbie, Miss Nannie Frisbie, Daniel Bauder, and G. D. Cole, as members of and doing business under the name of the Church of Christ at Independence, Missouri, Respondents.

DECREE.

On this 3rd day of March, 1894, this cause having been heretofore heard and submitted and the court being fully advised in the premises,

It is ordered, adjudged and decreed as follows:

That the Re-Organized Church of Jesus Christ of Latter Day Saints, the complainant herein, is a corporation duly and regularly organized under the laws of the State of Iowa, and as such includes in its corporate capacity the whole of the membership thereof, wherever found, and that the complainant has the right to maintain this action in its corporation capacity.

That the property in controversy, to-wit, lots 15 to 22 inclusive in Woodson & Maxwell's addition to the city of Independence, in the County of Jackson, State of Missouri, is and stands charged with a trust in favor of complainant; and that complainant is the owner of the equitable title in and to said land, the possession of which is now held by the respondents.

That the legal title to property involved in this action was from about the year 1832 to March 25, 1839, in one Edward Partridge but that said property stood charged with a trust in favor of the Church of Jesus Christ of Latter Day Saints, organized April 6th, 1830, by Joseph Smith and others, of which Church the said Edward Partridge was a member and the Presiding Bishop.

70 That about the year 1839 the said Edward Partridge being about to be driven from the State of Missouri, and with him his church, the said Edward Partridge, on March 25th, 1839, executed a deed of trust to the property in controversy, to John Cowdery, Jane Cowdery and Joseph Smith Cowdery, for the use and

benefit of the Church of Jesus Christ of Latter Day Saints, and that in truth and in fact the complainant herein is in legal succession to the said original church, holding as its system of faith and principles the doctrine, teaching and tenets of the said original church from its organization to the 27th of June, 1844.

That the respondents herein have at all times been charged with notice of the rights of the complainant to the property in controversy; and the trust character of the said property in favor of complainants. That the respondents do not and have not held to and taught the principles, tenets and faith and doctrine of the Mother Church as the same were taught and practiced by the Mother Church from its organization to June, 1844.

That the Church in Salt Lake City and Utah Territory under the name of Church of Jesus Christ of Latter Day Saints and claimed by the respondents to be the legal successor of the original Church established in 1830 by Joseph Smith, has departed from the faith and doctrine of the said original Church as taught prior to June, 1844, and has substituted as part of its tenets and belief the doctrine of Polygamy—"The doctrine that Adam was God and the supreme authority of the Priesthood," none of which were taught by the Mother Church.

That the purported deed from three of the five heirs of Edward Partridge to James Poole, was not acknowledged according to law, and the record thereof imparted no notice; and that neither said respondents nor any person through whom they claim title ever had actual or constructive possession of said property until about the month of September, 1882, and within ten years of the
71 bringing of this suit.

And the court further finds that the said complainant is the owner of the property in controversy and that said respondents nor either of them, have any legal or equitable interest therein and are not entitled to the possession thereof, and that complainant, as such owner, is entitled to the immediate possession thereof.

It is further ordered, adjudged and decreed by the court that the absolute title to said property be and is vested in complainant and that it is entitled to the immediate possession thereof, free and clear of all rights, claims or interests of the respondents or any of them.

It is further ordered by the court that if upon demand by complainant upon respondents and a refusal to obey the decree or order of this court, the complainant shall be entitled to a writ of assistance from the Clerk of this court, upon proof made by affidavit of such demand and refusal to obey, which writ shall command the Marshal of this court to eject the defendants and each and all of them from said land, to-wit: lots 15, 16, 17, 18, 19, 20, 21 and 22 in Woodson & Maxwell's addition to the city of Independence, Jackson County, Missouri, and put complainant in possession thereof.

And it is further ordered and adjudged by the court that the complainants have and recover from the respondents the costs of this action taxed at and the sum of attorney's fees to be also taxed as costs and that execution issue therefor.

(Signed) JNO. F. PHILIPS, Judge.

And afterwards, to-wit, on the 6th day of March, 1894, a motion for a re-hearing was filed by defendants. Said motion is in words and figures following:

72 In the U. S. Circuit Court, at Kansas City, Mo.

The Re-Organized Church of Jesus Christ of Latter Day Saints,
vs.
The Church of Christ et al.

Now come respondents and move for a rehearing of this cause for the following reasons, to-wit:

1. The decree should have been in favor of defendants instead of complainant.

2. The decree is contrary to the evidence.

3. The decree is contrary to law.

4. The court erred in its construction of the deed of 1839 from Partridge to the children of Oliver Cowdery,

5. The court erred in finding that said lands were so purchased with funds furnished by the Church or that they were impressed with a trust for church purposes.

6. The court erred in holding that the plaintiff had any right or interest in the lands in controversy, and in holding that it could maintain this action.

7. The court erred in holding that the State alone could contest the right of plaintiff to hold the two and one half acres in controversy.

8. The court erred in allowing the said deed of Partridge to the children of Oliver Cowdery to be read in evidence.

9. The court erred in holding that there was evidence of delivery of said deed.

10. The court erred in holding that respondents did not get title through the deed to Jas. Poole from the Partridge heirs and it erred in holding that the acknowledgment to said deed was invalid; and also in holding that there was no proof of any valuable consideration therefor.

73 11. The court erred in holding that respondents did not get title by adverse possession.

12. The court erred in holding that said Poole and those holding under and through him had notice of the alleged trust character of the land in controversy.

13. The court erred in holding that plaintiff is the beneficiary of the alleged trust so found as aforesaid by it, or that it represents them.

14. The court erred in finding that the doctrines of the Re-Organized Church of Jesus Christ of Latter Day Saints are the same or identical with the doctrines of the Church of Jesus Christ of Latter Day Saints, as held from the inception of said Church to the death of its founder, June 24th, 1844, or to the removal of said Church from Nauvoo, Ill., in 1846.

15. The court erred in its finding as to the standing and character of respondent church and that it looks to Salt Lake for aid; and in finding that Granville Hedrick was ever a member of the church which plaintiff claims to represent; and it erred in its finding as to the doctrines of respondent church.

16. The court erred in finding that respondent, R. Hill, held the property in controversy in trust for complainant church.

17. The court erred in holding that complainant was not guilty of laches.

18. The court erred in holding that a court of equity had jurisdiction in this case.

19. The court erred in decreeing possession to complainants, and in declaring a trust in their favor as to the land in controversy.

JOHN N. SOUTHERN & C. O. TICHENOR,

For Respondents.

And afterwards, to-wit, on the 23rd day of April, A. D., 1894, a stipulation was filed in the above entitled cause, said stipulation being in words and figures following, to-wit:

74 In the Circuit Court of the United States, for the Western Division of the Western District of Missouri.

The Re-Organized Church of Jesus Christ of Latter Day Saints
No. 1720. vs.
The Church of Christ et al.

It is hereby stipulated and agreed by the complainant and respondents in the above entitled cause that respondents, Pres. C. A. Hall and Mrs. C. A. Hall having severed their connection with said respondent church, and disclaiming any and all interest in the property in controversy are hereby released from any and all responsibility or liability for costs or expenses of any kind that may have been incurred since the third day of March, 1894, or that may be incurred in the further prosecution of the above entitled

cause by either complainant or respondent, and said respondents, C. A. Hall and Mrs. A. C. Hall decline to join in any appeal of the decree herein for the above reasons.

This 22d day of April, 1894.

C. A. HALL,
MRS. C. A. HALL,
L. TRABER, Atty. for Complt.
C. O. TICHENOR, Atty. for Respondent.

And afterwards, to-wit, on the 4th day of June, A. D. 1894, a petition for appeal and an assignment of errors were filed in the above entitled cause:

Said petition is in words and figures as follows:

75 In the United States Circuit Court, Western Division of Western District of Missouri, at Kansas City.

The Re-Organized Church of Jesus Christ of Latter Day Saints, Complainant,

vs.

The Church of Christ at Independence, Missouri, Richard Hill, Trustee, Richard Hill, Mrs. E. Hill, George Frisbie, Mrs. E. Frisbie, Miss Nannie Frisbie, Daniel Bauder and G. D. Cole, as members of and doing business under the name of the Church of Christ at Independence, Missouri, Respondents.

Now come the Church of Christ at Independence, Missouri, Richard Hill, Trustee, Richard Hill, Mrs. E. Hill, George Frisbie, Mrs. E. Frisbie, Miss Nannie Frisbie, Daniel Bauder and G. D. Cole, as members of and doing business under the name of the Church of Christ at Independence, Missouri, and present this their petition for an appeal together with their assignment of errors and pray that they be allowed a separate appeal, inasmuch as respondents C. A. Hall, President and Mrs. C. A. Hall decline to join in the same.

JOHN N. SOUTHERN,
C. O. TICHENOR,
Attys. for Respondents.

Said assignment of errors is in words and figures following, to-wit:

76 In the United States Circuit Court in and for the Western Division of the Western District of Missouri, at Kansas City.

The Re-Organized Church of Jesus Christ of Latter Day Saints,

vs.

The Church of Christ, R. Hill, Trustee, R. Hill, Mrs. E. Hill, C. A. Hall, Pres., Mrs. C. A. Hall, George Frisbie, Mrs. E. Frisbie, Miss Nannie Frisbie, Daniel Bauder and G. D. Cole.

For assignment of errors the parties appealing say:

1. The court erred in finding that complainant as a corporation includes in its corporate capacity the whole of the membership of the Re-Organized Church of Jesus Christ of Latter Day Saints.

2. The court erred in finding that complainant has the right to maintain this action in its corporate capacity.

3. The court erred in finding that complainant was organized in pursuance of authority conferred by the Re-Organized Church of Jesus Christ of Latter Day Saints.

4. The court erred in holding that the complainant could sue for land in the State of Missouri, and that it could hold the 2 1-2 acres sued for.

5. The court erred in its finding from respondents' answer and evidence that "the idea occurs that in theory respondents are ecclesiastical nondescripts and in practice squatter sovereigns; that they repudiate polygamy while looking to Salt Lake for succor; that they deny in their answer that this property was ever bought for the church or impressed with a trust therefor, and yet when their head men were on the witness stand they swore they are a part and parcel of the original church founded and inspired by Joseph
77 Smith the martyr and that to-day they hold the property in question in trust for that church.

6. The court erred in its construction of the testimony of these men as specified and in its construction of the pleadings, to which it refers, and erred in its conclusion that they have seized the Temple Lot and attempted to divest the trust, thus invoking the interposition of a court of equity, to establish the trust and prevent its perversion.

7. The court erred in holding that the land sued for stood charged with a trust in favor of the Church of Jesus Christ of Latter Day Saints organized April 6, 1830, by Joseph Smith and others, and the court erred in holding that respondents and those under whom they claim had notice of any such trust.

8. The court erred in holding that Edward Partridge on March 25, 1839, executed a deed in trust to the land in controversy to John Cowdery, Jane Cowdery and Joseph Smith Cowdery for the use and benefit of the Church of Jesus Christ of Latter Day Saints.

9. The court erred in holding that respondents or their grantors have at all times been charged with notice of any rights of complainant in the land sued for.

10. The court erred in admitting the copy of a deed from Edward Partridge to John Cowdery, Jane Cowdery and Joseph Smith Cowdery bearing no date but purporting to be acknowledged before Elias Higbee, styling himself, "J. C. C. C." the acknowledgment bearing date 25 March, 1839, and recorded in the Recorder's

office of Jackson County, Missouri, at Independence, February 7, 1870, in Book 73 page 432.

11. The court erred in its construction of said deed of Edward Partridge to John Cowdery and others and in holding that said deed impressed the land in controversy with a trust and in
78 holding that said deed was delivered at all.

12. The court erred in excluding the deed offered by respondents, from Lydia Partridge, Emily J. Partridge and Caroline A. Partridge, to James Pool, embracing the land in controversy, said deed bearing no date but acknowledged before A. A. Bradford, Clerk of the Circuit Court of the County of Atchison, Missouri, dated May 5, 1848, and recorded June 16th, 1848, in the Recorder's office at Independence, Missouri, in Book N, page 203.

13. The court erred in holding that it was incumbent on respondents to show that Pool paid a valuable consideration for the land conveyed in said deed last referred to, and in holding that it was incumbent on respondents to show that subsequent purchasers paid valuable considerations for their respective purchases.

14. The court erred in holding that complainant and those it claims to represent had not been guilty of laches.

15. The court erred in holding that complainant was not barred by the statute of limitations from bringing this action.

16. The court erred in allowing the complainant to amend its bill on the day of the hearing of this cause, against the objection of the respondents.

17. The court erred by misconceiving the allegation of complainant in its amended bill, to-wit: "That it is the same association, teaching the same teachings, tenets and beliefs as to all spiritual affairs as did the Church association by the name of the Church of Jesus Christ of Latter Day Saints, while at Nauvoo in the State of Illinois," up to a time in the year 1846, when splits and divisions occurred and the court erroneously substituted a material issue not made in the pleadings and determined such issue in favor of the complainant, to-wit: That "complainant church is a reproduction of the original church as it existed from 1830 to 1844" thus
79 ignoring the changes of doctrine and practice from the death of Joseph Smith on the 28th day of June, 1844, to the "splits and divisions" named in the amended bill as occurring in 1846 which doctrines and practices complainant in its amended bill claims not to hold.

18. The court erred in its finding that the Church of Jesus Christ of Latter Day Saints as it existed at Nauvoo was organized in 1852 or that at any other time after the splits and divisions in said church at Nauvoo in 1846 and that the Re-Organized Church of Jesus Christ of Latter Day Saints herein represents any such re-organization.

19. The decree is irregular, erroneous and contrary to law.

20. The court erred in rendering judgment against Nannie Frisbie and G. D. Cole.

JOHN N. SOUTHERN,
C. O. TICHENOR,
Attys. of said Respondents.

* * * * * * * * *

80. And thereafter, to-wit, on the 11th day of June, A. D. 1894, an order was made and entered of record in the above entitled cause. Said order is in words and figures as follows:

In the Circuit Court of the United States for the Western Division of the Western District of Missouri.

Monday, June 11th, 1894.

The Re-Organized Church of Jesus Christ of Latter Day Saints,
1720 against
The Church of Christ at Independence, Missouri, et al.

Now on this day a petition for a re-hearing herein being submitted to the court it is ordered that the same be and the same is hereby denied.

And now the application of respondents, to-wit, the Church of Christ at Independence, Missouri, Richard Hill, trustee, Richard Hill, Mrs. E. Hill, George Frisbie, Mrs. E. Frisbie, Miss
81 Nannie Frisbie, Daniel Bauder and G. D. Cole, for an appeal herein coming on for hearing, the same is taken up and submitted to the court and the court doth grant the said application and allow an appeal without the joining cause therein of C. A. Hall, President and Mrs. C. A. Hall. And it is further ordered that the bond for appeal this day presented to the court be and the same is hereby approved and that the same act as a supersedeas and that it be filed with the Clerk of this court and be made a part of the record herein.

(Signed) JNO. F. PHILIPS, Judge.

* * * * * * * * *

*No.*_____.

IN THE CIRCUIT COURT

OF THE

UNITED STATES,

WESTERN DISTRICT OF MISSOURI,

WESTERN DIVISION, AT KANSAS CITY.

The Reorganized Church of Jesus Christ of Latter Day Saints,
Complainant.

vs.

The Church of Christ at Independence, Missouri; Richard Hill, Trustee; Richard Hill, Mrs. E. Hill, C. A. Hall, President; Mrs. C. A. Hall, George Frisbie, Mrs. E. Frisbie, Miss Nannie Frisbie, Daniel Bauder, and G. D. Cole, as members of and doing business under the name of the Church of Christ at Independence, Missouri,
Respondents.

IN EQUITY.

COMPLAINANT'S ABSTRACT OF PLEADING AND EVIDENCE.

P. P. KELLEY,
SMITH MCPHERSON,
L. TRABER,
GEORGE EDMUNDS,
E. L. KELLEY,
Solicitors and of Counsel for Complainant.

JOHN N. SOUTHERN,
Solicitor for Respondents.

*Filed*_____ 1893.

_____ *Clerk.*

J. M. ORR, Notary and Stenographer.

LAMONI, IOWA:
HERALD PUBLISHING HOUSE AND BINDERY.
1893.

ERRATUM.

Page 105: The two last lines at bottom should be at top of page, and read church was *known*.

INDEX.

	Page.	Folio.
Amended Bill in Equity	1- 11	
Answer	11- 21	
Replication	22	
PLAINTIFF'S EVIDENCE.		
Articles of Association	24- 27	
Articles of Association, manner of adoption	77	119-120
Articles of Incorporation	284-287	670-673
Agreement	106	218
Brackenbury, John W.	106-107 231-232	219-221 548-551
Blair, W. W.	107-165	222-345
Briggs, E. C.	197-215	423-502
Carter, John H., Sen.	179-188	374-392
Crisp, John T.	274-278	
Certificate of Secretary of State, Missouri	280	
Code of Iowa—Laws of Corporations	279-282	
Clark, Gen., Speech of. Exhibit "26."	284	671
Deed, exhibit "20," Jones H. Flournoy et. ux., to Edward Partridge	234	553
Deed, exhibit "21," Edward Partridge to Jane Cowdery, et. al.	242	568-569
Deed, exhibit "22," Marie Louise Johnson and Chas. Johnson, to Geo. A. Blakeslee, Bishop and trustee of Reorganized Church	243-244	570
Deed, exhibit "23," Elizabeth Ann Cowdery (widow) to Marie Louise Johnson	246	575-576
Doctrine peculiar to Utah Church	263-264	616
Epitome of Faith of Original Church	41	53
Epitome of Faith, Reorganization	42	54- 55
Eaton, Mrs. Mary	268-274	629-640
Fallibility and Infallibility of Revelation	493-496	159-165
Gregg, Jacob	287-289	674-686
Government and Laws in General	52- 54	68- 70
Hailey, Thomas	175	366
Hall, W. R.	239-241 244-245	564-566 572
Hall, Martha A.	278-287	
Johnson, Dr. Charles	194-197	413-422
Kelley, E. L.	22 232-239 241-244 245-248	1- 6 552-563 567-571 573-577
McCoy, Wm.	173-174	363-366
Marriage, Law of	44	57- 60
" " Rebuttal	498-499	174-176
Notice, Published of Temple Lot	258 444	609 789
Notice to quit possession, exhibit "24"	247	517
Notices on practice of Marriage from *Times and Seasons*	51 303-308 500-501	65 56- 64 176-179
Rogers, Isaac N.	173	362
Rathbun, Hiram, Sen.	215-231	503-545

	Page.	Folio.
Rules of Representation	159–161	330–332
	162–163	335–338
	213–214	500–501
Ross, Charles R.	264–267	617–628
Record of election of Justices	283	668
Smith, Joseph	37– 91	47–165
Smith, Wm. B.	91–105	166–217
Stebbins, H. A.	165–171	346–359
St. Clair, Dr. Clarence	175–176	367–368
Stewart, Wm.	289–290	688–690
Taylor, John	188–194	393–408
Thomas, John H.	253–264	593–616
Title page of First Edition of Book of Doctrine and Covenants	65	88– 89
Whitehead, James	27– 37	7– 44
Weston, Robert	171–173	359–362
	248–253	578–587
Work of Granville Hedrick	259–262	611–615
	273–274	640
Young, Emily D. P.	176–179	369–373

DEFENDANTS' EVIDENCE.

Briggs, Jason W.	393–407	577–623
Grinter, P. H.	416	700–703
Hickey, L. D.	407–411	624–674
Henley, H. G.	416	699
Hill, Richard	423	720
	424	721
	428–448	739–795
Kingsbury, Joseph C.	333–343	177–228
Kimball, Lucy W.	371–379	448–494
Kelley, E. L.	414–416	695–698
	449–451	807–810
Littlefield, Lyman O.	326–333	147–176
Mason, Ember	411–414	685–693
Maxwell, Thomas	420–421	708–716
Moore, W. R.	422	717
Noble, Joseph B.	364–371	392–447
Notice, Dedication Temple Lot	294–295	20– 21
Owens, Alma	422–423	718–719
	424–428	726–738
Richards, Samuel W.	390–393	563–576
Snow, Lorenzo	216–226	108–144
Smith, Bathsheba	358–363	291–346
Staines, Priscilla M.	384	527–529
Swearingen, Josiah W.	451	811–812
Thompson, Mercy Rachel	343–358	237–290
Taylor, John H.	448–449	803–806
Woodruff, Wilford	291–313	1– 81
Willis, Melissa Lott	313–316	92–108
West, Mary Ann	379–384	495–519
Whelock, Cyrus W.	384–390	530–562
Wilson, Wm. R.	446–448	794–802
Work of Granville Hedrick	404	613
Work of Granville Hedrick, "*The Truth Teller*"	431–433	745–748
Young, Emily D. P.	363–364	348–383

PLAINTIFF'S EVIDENCE IN REBUTTAL.

Blair, W. W.	501–506	179–192
Certificate	506–507	
Griffiths, Willard	462–473	35– 92
Hawley, John	451–462	1– 34
Letters, C. A. Hall, exhibits 200, 201, 202, 203	481–483	126–132
Reynolds, C. E.	478–484	117–134
Smith, Joseph	484–501	136–178
Whitehead, James	473–478	93–113

IN THE

CIRCUIT COURT

OF THE

UNITED STATES,

WESTERN DISTRICT OF MISSOURI,

WESTERN DIVISION, AT KANSAS CITY.

The Reorganized Church of Jesus Christ of Latter Day Saints, Complainant. vs. The Church of Christ at Independence, Missouri; Richard Hill, Trustee; Richard Hill, Mrs. E. Hill, C. A. Hall, President; Mrs. C. A. Hall, George Frisbie, Mrs. E. Frisbie, Miss Nannie Frisbie, Daniel Bauder, and G. D. Cole, as members of and doing business under the name of the Church of Christ at Independence, Missouri, Respondents.	AMENDED BILL IN EQUITY.

BILL OF COMPLAINT.

The Reorganized Church of Jesus Christ of Latter Day Saints, a corporation organized under and pursuant to the laws of the State of Iowa, and having its principal place of business at the town of Lamoni, Decatur county, Iowa, and citizen of said State of Iowa, presents this its bill of complaint against said The Church of Christ at Independence, Missouri, a citizen of the State of Missouri.

Richard Hill, Trustee, a citizen of the State of Missouri.

Richard Hill, a citizen of the State of Missouri.

Mrs. E. Hill, a citizen of the State of Missouri.

Mrs. C. A. Hall, a citizen of the State of Missouri.

George Frisbie, a citizen of the State of Missouri.

Mrs. E. Frisbie, a citizen of the State of Missouri.

Miss Nannie Frisbie, a citizen of the State of Missouri.

Daniel Bauder, a citizen of the State of Missouri.

G. D. Cole, a citizen of the State of Missouri, and

C. A. Hall, President, a citizen of the State of Missouri, as members of and doing business under the name of the Church of Christ at Independence, Missouri, an association at Independence, Missouri, and a citizen of said State located at said city of Independence, county of Jackson and State of Missouri, and all citizens of said State.

And thereupon your Orator complains and says that it was incorporated under the laws of the State of Illinois on the —— day of October, 1872, and afterwards, on the —— day of June, 1891, it was duly incorporated under the laws of the State of Iowa.

The matter in dispute in this action exceeds, exclusive of costs and interest, the sum and value of five thousand ($5,000) dollars.

And your Orator further shows unto your Honors that it is the owner in fee simple, by title absolute, of the following described real estate lying and situate in the town, now city of Independence, Missouri, namely: Lots 15, 16, 17, 18, 19, 20, 21 and 22 and the triangular strip north of and adjoining said Lot 15, all in Woodson and Maxwell's addition to the said town, now city of Independence, and known as the Temple Lot, and is entitled to the immediate possession thereof as well as to the rents, profits, and the free enjoyment of said possession and ownership without let or hindrance by the defendants, or any of them, and yet the said defendants have, by unlawful means, entered into possession of said property, and the whole thereof, and refuse to surrender the possession of the same to your Orator although such possession has been frequently demanded and as often denied.

And your Orator further shows that heretofore the United States Government was the owner of said real estate aforesaid described, and by successive links in the chain of title, which would serve no purpose of being herein pleaded, one Edward Partridge, did, December 19, 1832, become the owner of said real estate, and the whole thereof, by good and sufficient conveyance by fee simple title; the said Partridge taking said property, and the title thereof, in trust, as hereinafter recited. The fact being that both your Orator and defendants claim said property by and through the same title from the United States Government to said Partridge.

And afterward, on or about the 28th day of March, 1839, the said Edward Partridge aforesaid mentioned, did, by a deed of conveyance, convey said property and the whole thereof, to Jane Cowdery, Joseph Smith Cowdery and John Cowdery, children of one Oliver Cowdery, in which said deed of conveyance it was recited and stated that the said Edward Partridge held said land in trust for the Church of Latter Day Saints, formerly of Kirtland, in the State of Ohio. He, the said Partridge, having taken said deed and bought said property with funds and moneys, the property of the said Church and by the said deed of the said Edward Partridge to the said Jane Cowdery and others, it was stated, recited, and agreed,

that the property herein in controversy, was conveyed to the said Grantees therein named for the use of the Church of Jesus Christ of Latter Day Saints, formerly of Kirtland, Ohio, as aforesaid, your Orator herein, which said Grantees at the time of such conveyance were minors of tender years, and the said real estate aforesaid was thus conveyed to them in trust as aforesaid and not otherwise.

And afterward, the time of which your Orator cannot state, the said Jane Cowdery, Joseph Smith Cowdery, and John Cowdery, each and all died before attaining their majority, dying intestate and without having made out any form for conveyance of said real estate or any part thereof; and the said Oliver Cowdery, father of said Grantees, died intestate without having made any conveyance of said real estate, or any part thereof, but the time of his death your Orator cannot state.

And afterward, namely, on or about the 25th day of May, 1886, one Elizabeth Ann Cowdery, the widow of said Oliver Cowdery, deceased, and the mother of said Jane, Joseph Smith, and John Cowdery, aforesaid mentioned, did execute a deed of conveyance to her daughter Marie Louise Johnson, the only living child of the said Oliver Cowdery aforesaid mentioned, which said deed of conveyance vested in her, the said Marie Louise Johnson, all the title in and to the property now in controversy, in so far as she, the said Elizabeth Ann Cowdery, could, by deed of conveyance vest said title.

And afterwards, on or about the 9th day of June, 1887, the said Marie Louise Johnson, her husband, Dr. Charles Johnson joining and concurring, did execute and deliver a deed of conveyance, thereby conveying the property now in controversy, and the whole thereof, to one George A. Blakeslee, Bishop and Trustee in trust of the Reorganized Church of Jesus Christ of Latter Day Saints, your Orator herein; which said conveyance was made to the said Blakeslee, Trustee in trust for the use and benefit of said Church, your Orator, according to the laws and usages of the same, at which time the said Blakeslee, as Bishop to your Orator, held the legal title of all real estate belonging to your Orator.

And your Orator further states and shows that on the —— day of ——— 1890, the said George A. Blakeslee died, and one E. L. Kelley has since been elected and appointed by the authorities of your Orator as such Bishop.

And, notwithstanding, said Partridge did, March 25, 1839, execute a deed of trust, conveying the property in trust, for your Orator, to said children, Jane, Joseph Smith and John Cowdery, the said Partridge soon after dying, his widow, Lydia Partridge, and his three children, Eliza M., Emily D., and Caroline E. Partridge, did May 5, 1848, execute and deliver a pretended Quit Claim deed, and that only of said premises, to one James Pool purporting to convey said premises in controversy to him, the said Pool, although in truth and in fact, at the time of the said Quit Claim conveyance, the widow and children of said Partridge had no ownership in said land,

nor any interest therein and never had, nor had their said ancestor, excepting in trust as aforesaid—all of which was well known to him the said Pool, when he took said pretended Quit Claim deed, and afterwards, viz.: August 3, 1848, the said James Pool by a pretended deed of conveyance, did pretend to deed the premises in controversy to one John Maxwell, he at the time knowing said premises were owned by your Orator, and he, the said Maxwell, at the time of said conveyance, well knew that the said Edward Partridge aforesaid, took and held said premises in trust for your Orator.

And September 22, 1848, the Sheriff of Jackson county, Missouri, on executions in certain judgments against him, the said James Pool, did sell said real estate to him, the said John Maxwell, at which time he, the said Maxwell, well knew all the facts aforesaid recited.

And the said Maxwell dying, his heirs did afterwards, March 23, 1867, by what purported to be a deed, deed said premises now in controversy to one Joseph C. Irwin, he the said Irwin taking said deed with full knowledge of all the facts as to said trusts and ownership as aforesaid.

And afterwards, the said Irwin did by a pretended conveyance purport to convey the said premises to one William Eaton he, the said Eaton, and said Irwin, at the time well knowing that your Orator owned said premises, and the whole thereof.

And afterwards the said Eaton conveyed said premises in trust to one Granville Hedrick, for the use and in trust for the Church of Christ of Latter Day Saints, which church in truth and fact, although the name is different, is that of your Orator.

And afterwards, the said Granville Hedrick dying, in an ex parte proceeding, the Circuit Court of Jackson county, Missouri, did, in September, 1890, appoint defendant Richard Hill, trustee, to execute the trust imposed upon him, the said Hedrick and any and all title and ownership he now has in and to said premises, is as the holder in trust for your Orator.

And your Orator further shows that the said Church of Jesus Christ of Latter Day Saints was first regularly organized in the State of New York, in the year 1830, which organization was soon thereafter, namely: in January, 1831, removed to the said town of Kirtland, in the State of Ohio, and afterwards, namely: during the year 1832, a branch of said Church was established at Independence, Missouri, another, soon thereafter, at Far West, Missouri, and another at Nauvoo, Illinois. And your Orator now has four hundred branches or local churches with a membership of 25,000 in the United States, besides factions and secessions from the mother Church, or your Orator. And your Orator has at this time a branch at Independence, Missouri, with a membership of seven hundred persons, or more.

And it was while your Orator first established its church at Independence, Missouri, that it became the owner of and possessor of the property in controversy, viz.: in 1832, while the faction or split,

now represented by defendants, was not organized, and did not come into existence until the year 1863, or thereabouts.

And your Orator further shows that your Orator is the same church association, teaching the same teachings, tenets, and beliefs as to all spiritual affairs as did the said church association by the name of the Church of Jesus Christ of Latter Day Saints while at Nauvoo, in the State of Illinois, and is the same church in fact, and the same association in fact, excepting that it has since been incorporated, as hereinbefore in this bill alleged, and by which reorganization and the incorporation thereof, has taken unto itself the name of your Orator, The Reorganized Church of Jesus Christ of Latter Day Saints, by reason of which it has at all times since the year, 1832, been the owner of all of the real estate in controversy in this action. Which said reorganization was believed to be necessary, by reason of the fact that about the year 1846, there were splits and differences in said church at Nauvoo, Illinois, and the said mother Church became disorganized and separated into factions or parties, one of which disturbing factions, led by Brigham Young, with his followers left the State of Illinois, first for the city of Council Bluffs, Iowa, and thereafter to what for many years has been known as Salt Lake City, in the Territory of Utah. Another faction led by J. J. Strang; one led by Gladden Bishop; and others led by different men, all located in different parts of the United States. Which factional, seceding and disturbing parties taught new doctrines and beliefs in no wise in harmony with, or consistent to the teachings, tenets, and doctrine of the said mother church. But that at the time of the said disorganization of and secessions from the said mother church, there were large numbers of the members and communicants of the said church, who refused to follow the leadership of any of the said factions or secessions, but who still adhered to, taught and believed the original doctrine, teachings, and tenets of the mother church, and who maintained their branch organizations, as originally made and recognized by the mother church, in the States of Illinois, Wisconsin, and Michigan, which said membership and persons who had, from the disorganization of the mother Church aforesaid, adhered to, taught and obeyed the teachings and tenets of said church, by common consent and in accordance with the teachings, doctrine, belief, and faith of the said mother Church, reorganized the said Church, which reorganization, so made by the adherents to the said mother Church is your Orator herein.

That during all the years from the year 1832, the time the said land was conveyed to Edward Partridge in trust as hereinbefore pleaded, until the year 1891, inclusive, the said property and all of the same was generally known and publicly reputed to be church property and by all the people of the said town, now city of Independence, as well as all other persons, was known and referred to as church property and as the "Temple property, or Temple lot"; and that all these facts were known to each and all the parties mentioned

and referred to in each and all the pretended deeds of conveyance hereinbefore referred to. That the said property and all of the same from the year, 1832, up to the year, 1886, inclusive, was vacant and unimproved land, without occupancy save and except the occupancy and control thereof by your Orator herein, and was recognized for a great many years by the public authorities whose duties it was to assess and collect taxes, as church property and not taxable.

That the defendant Church numbers less than twenty persons without organization elsewhere than Independence, Missouri, and it and all defendants deny that all articles adopted by your Orator and its authorities after the year 1835 are true and binding, or in any way presents the articles of faith to the Church, and all defendants insist, contrary to the teachings of the mother Church, that after the year 1834, Joseph Smith, who lost his life in 1844, was a fallen and false prophet, and his teachings to be false and heretical, although Granville Hedrick, the father of the organization and faction represented by defendants, was a member and Preacher of your Orator, or the mother Church, until the year 1860 or thereabouts.

But your Orator and defendants believe in the Bible and the Book of Mormon, while your Orator and its members believe in and teach the Book of Doctrine and Covenants of the church, from its organization in the year 1830 to the present day, which is denied by defendants after the year 1834.

And defendants deny the ordinance of Baptism for the Dead as taught by your Orator and the mother Church.

And in this as well as in many other matters, defendants are now and from their organization have been heretical, and in opposition to the teachings, tenets, and ordinances of the mother church, now represented by your Orator.

Your Orator is wholly without remedy at law, and presents this, its bill of complaint, to this court for full, adequate, and complete relief.

An answer under oath is hereby expressly waived.

And Your Orator Prays, That the Defendants, or Respondents, may be restrained from any further violation of the said rights of your Orator, and prays that your Honors may grant a Writ of Injunction issuing out of and under the Seal of this Honorable Court, perpetually enjoining and restraining the said defendants, their clerks, attorneys, agents, servants, and employees from in any manner or in any method making, or attempting to make, any conveyance of the said real estate in this Bill described, or any part thereof, or from in any manner placing or making any incumbrance or lien on or against the said property or on any part thereof; and from doing any other act in any way changing the apparent title or ownership of Record or otherwise in the said real estate.

And that upon final hearing the said Writ of Injunction be made perpetual, and that all interests held or claimed by defendants, or any of them, be declared to be held in trust for your Orator, and

that it and they, and each of them be decreed to convey all title claimed by them to your Orator.

And that upon final hearing your Orator may have a decree declaring and reciting that the said real estate, and the whole thereof belongs to, and is the property of your Orator, free and clear of all rights, claims, and interests of the defendants or any of them; and for such other and further relief as the equities of the case may require and to your Honors may seem meet.

May it please your Honors to grant for your Orator, not only a Writ of Injunction conformable to the prayer of this Bill, but also a Writ of Subpoena of the United States of America directed to the said Church of Christ, at Independence, Missouri, and the said Richard Hill, Trustee, and the said Richard Hill, Mrs. E. Hill, C. A. Hall, President, George Frisbie, Mrs. E. Frisbie, Miss Nannie Frisbie, Daniel Bauder, G. D. Cole, commanding them on the day certain, to appear and answer unto this Bill of Complaint and to abide and to perform such order and decree in the premises as to the court shall seem proper and required by principles of equity and good conscience.

_____

_____

Solicitors for Complainant and of Counsel for the Reorganized Church of Jesus Christ of Latter Day Saints.

Title of Court and Cause.]

ANSWER.

The answer of the Church of Christ at Independence, Missouri, a citizen of the State of Missouri, Richard Hill, Trustee, a citizen of the State of Missouri; Richard Hill, a citizen of the State of Missouri; Mrs. E. Hill, a citizen of the State of Missouri; Mrs. C. A. Hall, a citizen of the State of Missouri; George Frisbie, a citizen of the State of Missouri; Mrs. E. Frisbie, a citizen of the State of Missouri; Daniel Bauder, a citizen of the State of Missouri; C. A. Hall, President, a citizen of the State of Missouri; as members of and doing business under the name of the Church of Christ at Independence, Missouri, an association at Independence, Missouri, and a citizen of said State, located in said city of Independence, county of Jackson, and State of Missouri, some of the defendants to the bill of complaint of the Reorganized Church of Jesus Christ of Latter Day Saints.

The said respondents now and at all times hereinafter reserving all manner of benefit and advantage of exception to the many errors

and insufficiencies in said bill contained, for answer thereto, or unto so much, or such parts thereof as these respondents are advised are material for them to make answer unto, they answer and say: That they have no knowledge or information that the said complainant, styled The Reorganized Church of Jesus Christ of Latter Day Saints was incorporated under the laws of the State of Illinois, on the —— day of October, 1872, or afterwards on the —— day of June, 1891, it was duly or at all incorporated under the laws of the State of Iowa and on that ground deny it and leave the complainant to its proof. Respondents say, that though said incorporation exist as alleged by plaintiff it has no valid authority to own and control the property which it seeks to obtain from defendants; that said State of Iowa could not confer such authority over real estate in the State of Missouri upon a corporation for the promotion of the tenets of a confessedly religious organization and that whatever incorporation plaintiff has if any purporting to confer such authority is null and void in so far as it may be invoked to recover the property sought by this action. And that the allegations of plaintiff's bill show that plaintiff is not a proper or necessary party thereto, and that there is a defect of parties plaintiff to which defendant here takes exception on account of which plaintiff ought not to recover in its action.

Deny,—That the complainant the alleged Reorganized Church of Jesus Christ of Latter Day Saints is the owner of in fee simple title absolute or otherwise of the following described real estate, lying and situate in the town, now city of Independence, Missouri, namely:—

Lots 15, 16, 17, 18, 19, 20, 21, and 22 or any part thereof, all in Woodson and Maxwell's addition to the said Town, now the city of Independence, and known as the Temple lot or otherwise, or is entitled to the immediate or otherwise possession thereof, or to the rents or profits or the free enjoyment of said possession or ownership without let or hindrance by the respondents or any of them, or that the said respondents have by unlawful means entered into possession of said property or any part thereof as alleged, but on the contrary allege: That said respondents are the owners in fee simple by title absolute of said real estate and the whole thereof and are entitled to the immediate possession thereof as well as the rents and profits, and the free enjoyment of said possession and ownership without let or hindrance by said complainant or any other person.

Deny,—That complainant has demanded respondents to surrender the possession of the said property to the said complainant or any other person.

Admit,—That heretofore the United States Government was the owner of said real estate as aforesaid described, and that by successive links in the chain of title which would serve no purpose by being herein pleaded one Edward Partridge did, December 19, 1832,

become the owner of said real estate and the whole thereof by good and sufficient conveyance by fee simple title.

Deny,—That said Partridge took said property or the title thereto in trust as in said bill of complaint recited or that he took the same otherwise in trust.

Deny,—That afterwards on or about the 28th day of March, 1839, or at any other time the said Edward Partridge, aforesaid mentioned, did by a deed of conveyance convey said property or any part thereof to Jane Cowdery, Joseph Smith Cowdery, and John Cowdery, children of one Oliver Cowdery or to any of them, or that said alleged deed of conveyance it was recited or stated that the said Edward Partridge held said land in trust for the children of Latter Day Saints, at Kirtland in the State of Ohio as alleged, or otherwise, or that the said Partridge took the said deed or bought the said property with funds or moneys, the property of the said church, or that by the said alleged deed of the said Edward Partridge to the said Jane Cowdery and others, it was stated, recited, or agreed that the property herein in controversy was conveyed to the said grantees therein named for the use of the children of Latter Day Saints formerly of Kirtland, Ohio, as in said bill of complaint alleged, or otherwise, or that said alleged grantees or any of them, at the time of the said alleged conveyance were minors of tender years, or that said real estate aforesaid was conveyed to them or either of them in trust as alleged, or otherwise.

Allege,—That said respondents have no knowledge or information that afterwards the said Jane Cowdery, Joseph Smith Cowdery, and John Cowdery, each or any of them died before attaining their majority or that they died intestate, or without having made at any time any conveyance of said real estate or any part thereof or that the said Oliver Cowdery, father of said alleged grantees, died intestate without having made any conveyance of said real estate or any part thereof as alleged, and on that ground,

Deny,—That afterwards the said Jane Cowdery, Joseph Smith Cowdery, and John Cowdery, each or any of them died before attaining their majority or that they died intestate or without having made at any time any conveyance of said real estate or any part thereof, or that said Oliver Cowdery, father of the said alleged grantees, died intestate without having made any conveyance of said real estate or any part thereof, and leave the complainant to its proof.

Admit,—That afterwards, namely: on or about the 29th day of May, 1886, one Elizabeth Ann Cowdery executed a deed of conveyance to her daughter Maria Louise Johnson.

Allege,—That said respondents have no knowledge or information that said Elizabeth Ann Cowdery was at said time the widow of said Oliver Cowdery, deceased, or the mother of said Jane Cowdery, or Joseph Smith Cowdery, or John Cowdery aforesaid mentioned, or that said Maria Louise Johnson was at said time or is now the only

living child of said Oliver Cowdery aforesaid mentioned, and on that ground,

Deny,—That said Elizabeth Ann Cowdery was at said time the widow of said Oliver Cowdery, deceased, or the mother of said Jane Cowdery, Joseph Smith Cowdery, or John Cowdery, or that the said Maria Louise Johnson was at said time or is now the only living child of said Oliver Cowdery aforesaid mentioned, and leave the complainant to its proof.

Deny,—That by said deed of conveyance from said Elizabeth Ann Cowdery to said Maria Louise Johnson there was conveyed any title or interest in the said property in controversy to said Maria Louise Johnson as alleged or otherwise.

Admit,—that afterwards on or about the 9th day of June, 1887, the said Maria Louise Johnson, her husband, Dr. Charles Johnson, joining and concurring did execute and deliver a deed of conveyance to one George A. Blakeslee, styled Bishop and trustee in trust of the Reorganized Church of Jesus Christ of Latter Day Saints, and that said conveyance purports to have been made to the said Blakeslee, trustee in trust for the use and benefit of said church, according to the laws and usages of the same.

Deny,—That said deed of conveyance from said Maria Louise Johnson and her husband to said George A. Blakeslee, Bishop and trustee as above stated, did convey the property now in controversy or any part thereof or any interest therein to said George A. Blakeslee, Bishop and trustee in trust of the Reorganized Church of Jesus Christ of Latter Day Saints, as alleged in said bill of complaint or otherwise.

Allege,—That said respondents have no knowledge or information that said Blakeslee as Bishop, to the said complainant, held the legal title of all or any part of the real estate belonging to said complainant or that on the —— day of ——— 1890, the said George A. Blakeslee died or that one Kelley has since been elected or appointed by the authority of said complainant or otherwise as such Bishop, as alleged, and on that ground,

Deny,—That said Blakeslee, as Bishop to the said complainant holds the legal title of all or any part of the real estate belonging to said complainant or that on the —— day of ——— 1890, the said George A. Blakeslee died, or that one Kelley has since been elected or appointed by the authority of said complainant or otherwise, as alleged, and leave the complainant to its proof.

Admit,—That prior to May 5, 1848, the said Edward Partridge died and that on May 5, 1848, Lydia Partridge, widow of said Edward Partridge and Eliza M. Partridge, Emily D. Partridge, and Caroline E. Partridge, children of said Edward Partridge, deceased, executed and delivered a deed to one James Pool, purporting to convey to him said premises in controversy. But allege that said deed is a deed of bargain and sale and at the time of the execution thereof, the said grantors were in the adverse, exclusive, and notori-

ous possession of said land and delivered the same to said Pool.

Deny,—That at the time of the execution of said deed of conveyance, the said widow and children of said Edward Partridge had no ownership in said land nor any interest therein, or that they never had, or that their ancestors never had any ownership in said land excepting in trust as alleged, or that said Pool had knowledge that his grantors or Edward Partridge had no ownership nor interest in said land except in trust as alleged at the time he took said deed, or at any other time, but on the contrary,

Allege,—That said James Pool was a *bona fide* purchaser of said premises in good faith, paying therefor, to said Lydia Partridge, widow of said Edward Partridge and Eliza M. Partridge, Emily D. Partridge, and Caroline E. Partridge, children of the said Edward Partridge and grantors as aforesaid, the sum of three hundred dollars, and no notice of any claim of ownership or otherwise in said property of any one other than his said grantors, and that said deed was duly recorded in the office of the county recorder of Jackson county, Missouri, June 16, 1848, in book "N," page 203.

Admit,—That afterwards, on or about August 3, 1848, the said James Pool by deed of conveyance did deed the premises in controversy to one John Maxwell, and allege that thereupon the said John Maxwell went into the immediate possession thereof.

Deny,—That at said time or at any other time, said John Maxwell, grantee as above stated had knowledge that said premises were owned by the complainant herein or that said Edward Partidge took or held said premises in trust for said complainant, or any other person, but on the contrary allege, that said John Maxwell, grantee as aforesaid was a *bona fide* purchaser of said premises in good faith paying said James Pool therefor the sum of six hundred dollars, and that he, said Maxwell, had no notice of any claim of ownership or claim of any other nature in said property, other than his said grantor and that said deed was duly recorded August 30, 1848, in the office of the county recorder of Jackson county, Missouri, in book "N," page 273, and that he, the said John Maxwell thereupon took possession thereof and held the open, notorious, continuous, exclusive, actual, hostile, and adverse possession of the same until the same was conveyed as hereinafter alleged.

Admit,—That on September 22, 1848, the Sheriff of said Jackson county, on execution under certain judgments against said James Pool did sell said real estate to said John Maxwell, and said respondents further allege, that said Sheriff did on March 24, 1849, execute a deed to said John Maxwell of said premises, who was a *bona fide* purchaser of said premises in good faith, paying said Sheriff therefor the sum of thirteen hundred and fifteen dollars, which said deed was duly recorded in the office of the county recorder of Jackson county, Missouri, April 18, 1849, in book "O," page 99.

Deny,—That said John Maxwell at the time of said purchase from the said Sheriff aforesaid had any knowledge of any claim of any-

one in said premises other than his own and the interest that he purchased from said Sheriff.

Allege,—That one Joseph C. Irwin purchased all the interest of the heirs of John Maxwell, then deceased, in all of said lots numbered 17, 18, 19, and 22 in Woodson and Maxwell's addition to the city of Independence on the 15th day of September 1859, and thereupon received actual and immediate possession thereof, and held the open, hostile, actual, notorious, exclusive, continuous, and adverse possession thereto until the 9th day of July, 1873, and received a deed therefor March 23, 1867, conveying from said heirs to him the title in fee to said lots and that said deed was duly recorded in the office of the county recorder of Jackson county, Missouri, December 8, 1870, in book 82 page 255, but,

Deny,—That he, the said Irwin, purchased any other part of said premises and also deny that he had any knowledge of any claim of anyone excepting the interest he then and there purchased, but on the contrary allege that said Irwin was a *bona fide* purchaser of said lots numbered 17, 18, 19, and 22, in good faith, paying therefor the sum of one thousand dollars and seventy-seven cents.

Allege,—That one Thomas H. Swope purchased all the interest of the heirs of said John Maxwell, then deceased, in said lot number 21 in said Woodson and Maxwell's addition to the city of Independence on the 15th day of September, 1859, and thereupon received actual and immediate possession thereof and held the actual, open, hostile, notorious, exclusive, continuous, and adverse possession thereof until he conveyed the same, and received a deed therefor March 16, 1867, which said deed was duly recorded in the office of the county recorder of Jackson county, Missouri, May 14, 1867, in book 52, page 58, and that said Swope was a *bona fide* purchaser of said lot 21 in good faith, paying therefor the sum three hundred and eighty dollars, and that said deed conveyed to him the title in fee.

Allege,—That one John Montgomery purchased all the interest of the heirs of said John Maxwell, then deceased, in said lot 20 in Woodson and Maxwell's addition to the city of Independence on the 15th day of September, 1859, and thereupon received actual and immediate possession thereof and held the actual, open, hostile, notorious, exclusive, continuous, and adverse possession thereof until September 24, 1857, and received a deed therefor September 9, 1867, which said deed was duly recorded in the office of the county recorder of Jackson county, Missouri, September 30, 1867, in book "63" page 461 and that said Montgomery was a *bona fide* purchaser of said lot 20 in good faith, paying therefor the sum of one hundred and six dollars, and that said deed conveyed from said heirs to him the title in fee to said lot.

Allege,—That prior to the 27th day of November, 1860, one Samuel H. Woodson and Margaret J. Woodson, his wife, purchased said lot 15 in Woodson and Maxwell's addition to said city of Independence, but the exact date of said purchase is unknown to said respondents,

and on the said 27th day of November, 1860, and for some time prior thereto was in the actual, open, hostile, continuous, exclusive, notorious, and adverse possession thereof.

Allege,—On information and belief that prior to the 27th day of November, 1860, one John Kelly purchased said lot 16 in Woodson and Maxwell's addition to the city of Independence, Missouri, (but the exact date of said purchase is unknown to your said respondents,) and thereupon went into the immediate, actual, and exclusive possession thereof, and held the actual, hostile, notorious, exclusive, open, continuous, and adverse possession thereon until his death.

Admit,—That afterwards the said Irwin, by a coveyance conveyed said lots 17, 18, 19, and 22 of Woodson and Maxwell's addition to the city of Independence, to one William Eaton, but deny that any other part of said premises were purported to be conveyed by said Irwin, or that said Eaton had any knowledge of any claim of ownership or otherwise of said complainant or any other person to said lots 17, 18, 19, and 22 or any part thereof but on the contrary allege, that said William Eaton was a *bona fide* purchaser of said lots 17, 18, 19, and 22 of Woodson and Maxwell's addition to the city of Independence in good faith, paying therefor the sum of five hundred and twenty-five dollars, on the 9th day of July, 1873, at which time he received a deed therefor conveying to him a title thereto in fee, which said deed was duly recorded in the office of the county recorder, of Jackson county, July 11, 1878, in book "104," page 311, and held the actual, open, hostile, continuous, exclusive, notorious, and adverse possession thereof until the 5th day of November, 1877.

Allege,—That on or about the 23d day of November, 1860, one Samuel H. Woodson, and his wife Margaret J. Woodson, being then in possession of said lot 15 in Woodson and Maxwell's addition to the city of Independence, claiming to be and who were the absolute owners of said lot, did by a warranty deed convey in fee to Adolphus Kean and Susan Kean, all of said lot 15, and said grantees, Adolphus Kean and Susan Kean were *bona fide* purchasers of said lot 15 at said time in good faith, paying therefor the sum of one hundred and fifty dollars, and went into and held the immediate, actual, open, hostile, continuous, adverse, and exclusive possession thereof, and said deed was duly recorded in the office of the county recorder of Jackson county, Missouri, November 27, 1860, in book "36," page 240, and that afterwards Adolphus Kean having died, said William Eaton purchased said lot 15 in Woodson and Maxwell's addition to the city of Independence, from Maria McClanahan, mother of Adolphus Kean and Susan Nelson, nee Susan Kean, and sister of Adolphus Kean, receiving a waranty deed, conveying in fee to said Eaton, said lot 15 on March 7, 1874, which said deed was duly recorded in the office of the county recorder of Jackson county, Missouri, March 7, 1874, in book "104," page 517, that said William Eaton was at said time a *bona fide* purchaser of said lot 15, in good faith, paying said

McClanahan and Nelson therefor the sum of two hundred dollars, and went into the immediate possession and held the open, actual, hostile, exclusive, notorious, and adverse possession thereof until the 5th day of November, 1877.

Allege,—That on or about the 13th day of May, 1866, said Thomas H. Swope by deed, conveyed to one Joseph Tindell, all of said lot 21, in Woodson and Maxwell's addition to the city of Independence, and that said Tindell was a *bona fide* purchaser of said lot 21 in good faith, paying therefor the sum of two hundred and fifty dollars, said deed being duly recorded in the office of the county recorder of Jackson county, June 4th, 1866, in book "47" page 129, and thereupon went into the immediate possession thereof and held the open, actual, hostile, notorious, continuous, exclusive, and adverse possession of the same until the 22d day of August, 1867.

Allege,—That on or about the 22d day of August, 1867, said Jacob Tindell, by good and sufficient deed, conveyed to one John H. Hedrick in fee all of said lot 21 in Woodson and Maxwell's addition to the city of Independence, and that said John H. Hedrick was a *bona fide* purchaser of said lot 21 in good faith, paying therefor the sum of two hundred and fifty dollars, said deed being recorded in said office of the county recorder of Jackson county, September 24, 1867, in book "50" page 331, and thereupon went into the immediate possession thereof and held the open, actual, hostile, notorious, exclusive, continuous, and adverse possession thereof until November 8, 1869.

Allege,—That on or about the 24th day of September, 1867, said John Montgomery, by deed, conveyed in fee to one John H. Hedrick all of said lot 20 in Woodson and Maxwell's addition to the city of Independence and that said John H. Hedrick was a *bona fide* purchaser of said lot 20 at said time in good faith, paying therefor the sum of two hundred and fifty dollars, and said deed being duly recorded in the office of the county recorder of Jackson county, September 24, 1867, in book "50," page 332, and he thereupon went into the immediate and actual possession thereof, and held the open, actual, hostile, continuous, notorious, exclusive, and adverse possession of the same until the 8th day of November, 1869.

Allege,—That on or about the 5th day of September, 1867, the said John Kelley, having died, proceedings were had in the Probate and Common Pleas Court for probate business, of Jackson county, Missouri, and the said lot 16 of Woodson and Maxwell's addition to the city of Independence, was duly and lawfully sold as a portion of the estate of said John Kelly, deceased, to said John H. Hedrick, he being a *bona fide* purchaser, paying in good faith therefor the sum of two hundred and fifty dollars, and receiving on the 12th day of December, 1867, a deed therefor conveying to him the title in fee which was duly recorded in the office of the county recorder of Jackson county, Missouri, December 12, 1867, in book "53," page 526, and he thereupon went into the actual and immediate possession thereof,

and held the open, actual, hostile, notorious, exclusive, continuous, and adverse possession thereof until November 8, 1869.

Admit,—That the said William Eaton and wife conveyed said lots 15, 17, 18, 19, and 22 of Woodson and Maxwell's addition to the city of Independence, to one Granville Hedrick, trustee in trust for the Church of Christ.

Deny,—That said Church of Christ is the complainant herein as alleged, but on the contrary allege that said Granville Hedrick, with the moneys of your respondents at their instance and request, purchased said lots 15, 17, 18, 19, and 22 of Woodson and Maxwell's addition aforesaid from the said William Eaton and wife, as trustee in trust for the Church of Christ, the respondents herein on the 5th day of November, 1877, which said Church of Christ, the respondents herein, were *bona fide* purchasers of said lots 15, 17, 18, 19, and 22 of Woodson and Maxwell's addition aforesaid at said last named date, in good faith, paying said William Eaton and wife therefor the sum of four hundred and twenty-five dollars, and received a deed therefor, which conveyed to said Granville Hedrick the title in fee in trust for your respondents which was recorded in the office of the county recorder of Jackson county, Missouri, November 6, 1877, in book "115," page 452, and said Church of Christ, respondents herein, received possession of said lots 15, 17, 18, 19, and 22 on said fifth day of November, 1877, under said deed, and have actually, openly, notoriously, exclusively, hostilely, and adversely continued to occupy and enjoy the possession of the same against the claims of all persons.

Allege,—That on the 8th day of November, 1869, the said John H. Hedrick and wife, Elizabeth Ann Hedrick, by deed of conveyance conveyed to Granville Hedrick as trustee in trust for the Church of Christ, respondents herein, all of lots 16, 20, and 21 in Woodson and Maxwell's addition to the city of Independence in the county of Jackson, Missouri, which said Church of Christ, respondents herein, were *bona fide* purchasers of said lots 16, 20, and 21 in Woodson and Maxwell's addition to the city of Independence on said eighth day of November, 1869, in good faith, paying the said John H. Hedrick and wife therefor the sum of seven hundred and fifty dollars, moneys of the Church of Christ, respondents herein, which said deed was recorded in the office of the county recorder of Jackson county, Missouri, November 12, 1869, in book "73," page 1, and said Church of Christ, respondents herein, received possession of said lots 16, 20, and 21 in Woodson and Maxwell's addition to the city of Independence on said 8th day of November, 1869, and has actually, openly, notoriously, exclusively, hostilely, and adversely continued to occupy and enjoy the possession of the same against the claims of all persons.

Admit,—That afterwards the said Granville Hedrick dying, on ex parte proceedings, the Circuit Court of Jackson county, Missouri, did in September, 1890, appoint respondent, Richard Hill trustee to execute the trust imposed by said deed from John H. Hedrick and

wife and from William Eaton and wife, on said Granville Hedrick.

Deny,—That all title or ownership, or that any title or ownership which said respondents, Richard Hill, now has in said premises is held by him in trust for the Reorganized Church of Jesus Christ of Latter Day Saints, or the complainant, herein as alleged, or otherwise, but on the contrary allege that said Richard Hill holds said title in trust for the Church of Christ respondents herein.

Deny,—That the Church of Latter Day Saints was first regularly organized in the State of New York in the year 1830, or that the same was soon thereafter, namely; in January, 1831, removed to the town of Kirtland, in the State of Ohio or afterwards namely; during the year 1832, a branch of said church was established at Independence, Missouri, or another soon thereafter at Far West, Missouri, or another at Nauvoo, Illinois.

Allege,—That said respondents have no knowledge or information that the complainant has four hundred branches or local churches, or that it has a membership of 25,000 in the United States besides factions or secesssions from the mother church or the complainant, or that complainant at this time has a branch at Independence, Missouri, with a membership of 700 persons and on that ground,

Deny,—That said complainant has four hundred branches or local churches or that it has a membership of 25,000 in the United States besides factions or secessions from the mother church or the complainant, or that complainant at this time has a branch at Independence, Missouri, with a membership of 700 persons, and leave the complainant to its proof.

Deny,—That the said complainant is the same Church association, or that it teaches the same teachings, or tenets, or beliefs as to all spiritual affairs as did the alleged church association by the name of the Church of Latter Day Saints while at Nauvoo, in the State of Illinois, or that complainant is in fact or the same association in fact excepting that it has since been incorporated as in complainant's bill of complaint alleged, or by which reorganization or incorporation thereof it has taken unto itself the name of the complainant, the Reorganized Church of Jesus Christ of Latter Day Saints, or that by reason of which allegations in said bill of complaint, it has all times since the year 1832, been the owner of all or any of the real estate in controversy in this action as alleged or otherwise, but on the contrary allege, that said Reorganized Church of Jesus Christ of Latter Day Saints did not have an existence as a church or association prior to the year 1851.

Deny,—That it was rendered necessary for complainant to reorganize by the alleged reason that about the year 1846, there were splits or divisions in said complainant's church at Nauvoo, Illinois, as alleged.

Deny,—That one faction of said complainant's church retired therefrom, led by Brigham Young, who with his followers left the State of Illinois, first for the city of Council Bluffs, Iowa, and soon after for what for many years has been known as Salt Lake City, in the

Territory of Utah, or that said Brigham Young and his followers were a faction or seceding party from the complainant as alleged.

Deny,—That the said Church of Christ, respondents herein, numbers less than twenty persons or that they are without organization elsewhere than in Independence, Missouri.

Admit,—That respondents do not consider any of the articles adopted by the complainant or its authority after the year 1835, are binding upon respondents, and further allege that said Church of Christ, respondent herein, was at the time of receiving said property now in controversy, an association entirely independent of and had no connection with said complainant and that said Church of Christ, respondent herein, never had and has not now any connection with said complainant herein.

Deny,—That one Granville Hedrick was the father of the organization represented by respondents herein, or that he, said Granville Hedrick, was a member or preacher of the complainant until the year 1860, or thereabouts, or at all, as alleged or otherwise,

Admit,—That respondents believe in the Bible and Book of Mormon, and allege that they also believe in the Revelations given prior to 24th of February, 1834, contained in the Book of Doctrine and Covenants so far as they are in harmony with the teachings of the Bible and Book of Mormon.

Deny,—That said Reorganized Church of Jesus Christ of Latter Day Saints, believe in all of the Revelations of the Doctrine and Covenants, as alleged.

Deny,—That the said complainants, or the Reorganized Church of Jesus Christ of Latter Day Saints is the mother church or that it represents the mother church as alleged, or otherwise,

And the said respondents submit to the Honorable Court that all and every of the matters in the said complainant's bill, mentioned and complained of are matters which may be tried and determined at law, and with respect to which the said complainant is not entitled to any relief from a court of equity and these respondents hope that they shall have the same benefit of this defense as if they had demurred to said bill of complaint.

And these respondents deny all unlawful combinations in said bill charged, without this, that any other matter or thing material for them to make answer to and not herein sufficiently answered, avoided, or denied is true to the knowledge or belief of the respondents, and which matters and things these said respondents are ready to aver and prove as this court shall direct, and prays to be hence dismissed with their reasonable costs and charges in this behalf most wrongfully sustained.

JOHN N. SOUTHERN,

Solicitor for respondents, the Church of Christ, Richard Hill, trustee; Richard Hill, Mrs. E. Hill, Mrs. C. A. Hall, George Frisbie, Mrs. E. Frisbie, Daniel Bauder, C. A. Hall, President.

Title of Court and Cause.]

REPLICATION.

Replication of complainant in this cause, to the answer of the Church of Christ at Independence, Missouri,—Richard Hill, Trustee, Richard Hill, Mrs. E. Hill, C. A. Hall, President, Mrs. C. A. Hall, George Frisbie, Daniel Bauder, and other defendants named in said answer.

This replicant saving and reserving all advantage of exceptions to the manifold insufficiencies of said answer, for replication thereto says: That it will aver and prove its said Amended Bill to be true and sufficient, and that the said answer is untrue and insufficient.

PLAINTIFF'S EVIDENCE.

E. L. KELLEY, of lawful age, being produced, sworn, and examined on the part of the complainant herein, testified as follows, in chief:—

My name is E. L. Kelley; I reside at present at Lamoni, Iowa; I
2 am the Presiding Bishop of the complainant church. I was one of the incorporators of the complainant in this case in Iowa, in the year 1891. The paper "B" is the original Articles of the Incorporation of the Church of Jesus Christ of Latter Day Saints, the plaintiff in this case.

CROSS-EXAMINATION.

The plaintiff or complainant in this action is a corporation. A man may be a bishop of a society or rather an incorporation by a society, which provides for the office of a bishop incorporating under the statutes of a State providing for such officer as trustee.

I am the Bishop of the church known as the Reorganized Church of Jesus Christ of Latter Day Saints, which was incorporated at Lamoni, Iowa, the sixth day of June, 1891, in accordance with the laws of the State of Iowa. It is recited in the Articles of Incorporation themselves what part the church at Independence, Missouri,
3 took with reference to this, in connection with the other churches of the body, by resolution of all the churches made in its General Conference, the Independence church being duly represented there. I refer to the Annual General Conference of the church, and one that was held April 6, 1891, at Kirtland, Ohio. That conference provided that such an incorporation might take place, and also authorized any church of a like nature; and especially authorized the incorporation at Lamoni, Iowa. The paper handed me purports to be a supplement to the *Saint's Herald;* the *Saint's Herald* is an authorized publication of the church, but the paper or pamphlet is not. I remember that a resolution similiar to that you suggest was passed, but whether there was any other, I cannot state from
4 memory. The association at Lamoni, Iowa, adopted Articles, as set forth in the originals to which I have already testified. They were

signed by the parties whose names appear in the Articles, were duly acknowledged, and were filed in the recorder's office of the county of Decatur, Iowa, as provided for under the laws of Iowa. There might have been other things done with reference to it, but that is as near as I remember. I mean by association the church; by church, I mean the church located at Lamoni, Iowa, as set forth in the Articles of Incorporation. The incorporation of the Lamoni church was in harmony with the resolution of the Annual General Conference, and at the instance of the church at Lamoni, Iowa. All the members of the church at Lamoni participated in the incorporation by vote, but not by signature. If I knew just the membership there, I could tell how many participated by vote, but I cannot do so, because I do not know the membership. In round numbers the membership is about seven hundred and fifty (750) or eight hundred (800); the Articles of Incorporation show how many participated by signature. The church at Lamoni effected the Articles of Incorporation because that is the Central Church, and all others are simply branches of that church; that is the way we understand it. It is the headquarters; it is the incorporated body; it is made the headquarters, the
5 principal place of business; and was made the principal place of business by common consent of the body, which is the rule of action of the body. The body I refer to is the incorporated church at Lamoni, and all the branches of that church in its representative capacity. The church at Lamoni is not, so far as time is concerned, the older organized church; there are branches of the church that have an older organization than the present headquarters of the church, so far as time is concerned. We designate that which is older as a branch, from that which is younger, by virtue of the rules of the body governing the church. These rules are found in the recognized books of the church, and the actions of the General Conferences of the body. Under the laws of the State of Iowa, provision is made for the incorporation of local societies, and providing in such corporation supervision in the manner of a presbytery, synod, or General Convention of churches; and so the incorporation of this church is made. We hold property in other States, by virtue of the law of comity existing between the States. I stated that I was Bishop of the Reorganized Church of Jesus Christ of Latter Day Saints and am at the present time the Bishop. There is but one at the present that is acting in the office of bishop, but he has counselors to assist and advise him. The Bishop is not the highest officer in the
6 church; the highest officer is the President or Presiding Elder. The resolution authorizing the incorporation of the church is general, and any branch of the church in any State where such corporation is permitted, might act in harmony with the resolution and incorporate; but there was a special resolution in regard to the incorporation of the church at Lamoni, Iowa. The incorporation was had in Iowa because we preferred to incorporate under the Iowa law.

ARTICLES OF ASSOCIATION.

EXHIBIT B.

Articles of Association made pursuant to a resolution passed at the Annual Conference of the Reorganized Church of Jesus Christ of Latter Day Saints, on Friday, April 10, A. D. 1891, providing:—

"That a committee of three be appointed to prepare Articles of Incorporation in harmony and in conformity with the present incorporation under the laws of the State of Illinois, the same to be used to further incorporate the Society in the State of Iowa and other States by vote of any large Branch or Stake in such State or States, as provided by the laws of the same.

"These said Articles having been adopted by the Reorganized Church of Jesus Christ of Latter Day Saints at a general meeting of the members of said Church, held at Lamoni, county of Decatur, in the State of Iowa, on the sixth day of June, A. D. 1891.

"*Article 1.*—The name of this association and organization shall be, The Reorganized Church of Jesus Christ of Latter Day Saints, and shall be incorporated under the laws of Iowa in and by that name.

"The Church *adheres to the doctrines and tenets* of the original Church of Jesus Christ of Latter Day Saints as organized by Joseph Smith (the Martyr), on the sixth day of April, A. D. 1830, as the same has been reorganized by Joseph Smith, formerly of Plano, Illinois, now of Lamoni, Iowa, with the advice and assistance of Jason W. Briggs, Zenos H. Gurley, Sen., William Marks, Sen., Israel L. Rogers, Isaac Sheen, and many others.

"THE CHURCH GOVERNMENT CONSISTS:—

"1. Of a First Presidency — consisting of a President and two Counselors.

"2. A Quorum of the Twelve (a traveling High Council).

"3. A 'Standing High Council' of the church; and at each 'stake' a similar subordinate Standing High Council, consisting of twelve chosen for that purpose.

"4. A High Priests' quorum.

"5. One or more quorums of Seventy, not exceeding seven.

"6. Quorums of Elders.

"7. Bishops, consisting of a Presiding Bishop, and associate or local bishops, said bishops having temporal jurisdiction subject to the general direction of the church, and higher church authorities.

"8. Quorums of Priests.

"9. Quorums of Teachers.

"10. Quorums of Deacons.

"The Reorganized Church at Lamoni, Iowa, shall be the principal or Central Church, unless change is made otherwise as provided for by amendment to these articles; all others shall be 'stakes,' or 'branches,' but all subject to the same church government, subordinate to this organization, and forming constituent parts of the same;

and a general or business meeting of said Reorganized Church may be called at any of said churches or places, according to the laws provided by said organization for convening its assemblies.

"A 'branch' may be organized at any time or place, by the concurrence of six or more resident members of said Reorganized Church, who are in good standing, one of whom must be an elder, priest, teacher, or deacon.

"A stake is a large branch, organized into a 'stake,' at the direction of a General Conference of the church; Lamoni, Decatur county, Iowa, shall be the principal place of business of said corporation, but to facilitate the work of the society, business may also be transacted at the 'stakes,' or 'branches,' when deemed proper.

"Said Reorganized Church, and its 'stakes,' and 'branches' are in all respects subject to the doctrines and tenets of the said Original and Reorganization, in this article mentioned.

"*Article 2.*—The Presiding Bishop and his Counselors shall be the trustees of the church, and perform all the duties contemplated by chapter two of title nine of the Code of Iowa, a majority of whom may perform any act under said law, or contemplated by this organization.

"*Article 3.*—This organization shall publish, print, circulate, sell, or give away, religious, school, and missionary books, papers, tracts, and periodicals, such as said church shall deem necessary or useful to the promotion of religion and morality; and for that purpose may purchase, or own such printing presses, types, cases, and material as shall be necessary to conduct such publication, binding, and circulation of books and published matter aforesaid; and said publication business shall be under the immediate control and management of a Board of Publication, to be nominated by the Presiding Bishop and confirmed or approved by the church, at any General, Annual, or Semi-annual Conference; but the title of the property to be in the corporation, and all suits relating thereunto must be in the corporate name.

"*Article 4.*—This corportion may purchase, and hold, or receive donations, or in any legal way procure, receive, and hold the title of any real or personal property for the use of said church, its stakes and branches, the title of all of which, whether procured by the general church or any stake or branch, shall be taken to the corporation and in the corporate name of said Reorganized Church; and said corporation shall hold the same for the use of the church, its stakes and branches; and said corporation may sell and convey the same, or any part thereof, applying the proceeds to the use aforesaid.

"*Article 5.*—This church corporation shall have a corporate seal; all conveyances shall be signed by the Presiding Bishop, as the trustee, and sealed with the seal of said corporation.

"These Articles of Association constitute the By-laws of said corporation, until revised or amended. Said By-laws or Articles of As-

sociation may be revised or amended at any General Conference of the Church, by a two thirds' majority vote of the members of said church present and voting at said conference. Notice of such amendment shall be given in the church paper at least two months before action can be had on such proposed change.

"The principal place of business of said corporation may be changed from Lamoni aforesaid to any other place, by the direction of the Quorum of the First Presidency, the Bishop and Counselors, and the Board of Publication. Upon such change being made, a certified copy of the affidavit of organization of this corporation, together with a similar affidavit of the action of said church reorganizing said corporation, and naming such new principal place of business, shall be filed in the office of the Recorder of Deeds of the county in which such new principal place of business is located. Such change of principal place of business shall not change or affect the right of said corporation, but only the location of its principal office or place of business. Said corporation may establish subordinate places of business at any time and in any place; but all shall be subject to the control of the general office. Said corporation may appoint agents at any time and place to act in behalf of said corporation. Said corporation may sue and be sued, defend and be defended, in all courts and places; but all shall be done in said corporate name.

"*Article 6.*—All property now held or owned by said church, in the name of any person or persons, as trustees or otherwise, including the publication establishment of said church, shall vest in said corporation. And all persons holding such property in trust for said church are hereby directed and required to transfer and convey the same to said corporation, as the property of said church. And said corporation shall by operation of law succeed to all property now owned by said church or held for its use, and may sue for and recover the same in the name of said corporation.

"*Article 7.*—The term of office of said trustee shall be as follows, viz.: of the trustee, who is the Presiding Bishop of the Church, during his good behavior, and while he remains such Presiding Bishop. Of the other trustees, who are the Counselors of said Presiding Bishop, during their good behavior, not extending beyond the term of office of said Presiding Bishop as such trustee, except as hereinafter provided. Upon the death, resignation, or removal from office of said Presiding Bishop, the office of the other trustees shall become vacant, upon the appointment of another Presiding Bishop, who shall be the successor as Bishop, and his assuming the office of such trustee; and thereupon such new Presiding Bishop and his Counselors shall be the trustees of said corporation; it being understood that no person can be trustee of said corporation except the Presiding Bishop of said church and his Counselors. Said trustees, or either of them, may be removed by said church for cause, the same as any other church officer.

"*Article 8.*—This organization reserves to itself all the rights, powers, privileges, and exemptions conferred by chapter two, title nine of the Code of Iowa, providing for the Incorporation of Churches or Religious Societies and the same so far as applicable is made a part of these Articles of Association.

"*Article 9.*—The trustees of this association, now duly elected and qualified according to the laws and usages of the Society to act for the same and for this present year, are, E. L. Kelley, Presiding Bishop of said Reorganized Church, and George H. Hilliard and Edwin A. Blakeslee, Counselors to the Bishop aforenamed.

"In testimony of the foregoing declaration of principles, rules, usages, and purposes, we hereby subscribe our names, and acknowledge the same to be our voluntary act and deed for the objects set forth.

"Done at Lamoni, Decatur county, Iowa, this sixth day of June, A. D. 1891."

Signed by "E. L. Kelley," and thirty others.

"State of Iowa, } ss.
"Decatur County, }

"Before me, Asa S. Cochran, Notary Public in and for said county and State, personally appeared the above-named, E. L. Kelley, D. F. Nicholson, W. W. Blair, Robert Winning, Alex. Hale Smith, Robert M. Elvin, D. F. Crane, C. H. Barrows, Jasper H. VanMeter, Edwin B. Stafford, F. M. Smith, S. P. Bass, Ed Weedmark, A. K. Anderson, Samuel Ackerley, J. P. Dillon, Seth M. Bass, George Derry, J. B. VanMeter, John Traxler, Emeline A. Elvin, Minnie E. Anderson, Ekin Lovell, David Dancer, Henry A. Stebbins, Joseph Smith, S. D. Shippy, William Anderson, and D. D. Young, personally known to me to be the identical persons whose names are attached to the foregoing Articles of Incorporation, and acknowledged the signing of the same to be their voluntary act and deed, and for the purposes named.

[SEAL.] "ASA S. COCHRAN,
"Notary Public.

"LAMONI, Iowa, June 6, 1891."

JAMES WHITEHEAD, of lawful age, being produced, sworn, and examined on the part of the complainant, testified as follows, in chief:—

7 My name is James Whitehead; I live at Lamoni, Iowa; I have lived there nearly three years. Before that I lived at Alton, Illinois, for about forty years. Before going to Alton I lived at Nauvoo, Illinois. I landed in Nauvoo, the thirteenth day of April, 1842; lived there till the fall of 1847; I was engaged while there in church work. I was the private secretary of Joseph Smith from early in June, 1842, until he was killed in 1844. I was there when he was killed;

I knew the offiers in the old church; I was a member of the church when I went to Nauvoo. I was baptized the eighteenth day of October, 1837, at Preston, Lancashire, England; was baptized by Heber C. Kimball.

8 I was acquainted with the general doctrine and tenets of the old church from 1842 to 1844. I am acquainted with the doctrine, tenets, and teachings of the Reorganized Church of Jesus Christ of Latter Day Saints. The doctrine, tenets, and teachings of the old church in the days of Joseph Smith the prophet, and the doctrine, teachings, and tenets of the Reorganized Church now are identically the same; the books of doctrine of the old church are the same books that are used by the Reorganized Church, the plantiffs in this case; I mean, of course, the standard books, the books of doctrine. The standard books in the Reorganized Church and also in the old church are the Bible, the Book of Mormon, the Book of Doctrine and Covenants; these are the three books that are standard. They were the standard books of the old church in the days of Joseph Smith; they are recognized as the standard, both by the old church and by the Reorganized Church.

Besides being the private secretary of Joseph, I held the office of a high priest in the original church, from 1841 until this time; I was ordained at the first General Conference in Manchester, England. I hold the same office now in the Reorganized Church, a High Priest. The duties of the High Priest are to preach the gospel as it is written according to the divine will of the Master; to preside at meetings,
9 to give instruction according to the standard of the faith; but the teachings must be in harmony with the word of God.

I recollect a meeting that was held in the winter of 1843, at Nauvoo, Illinois, prior to Joseph Smith's death, at which the appointment was made by him, Joseph Smith, of his successor. His son Joseph was selected as his successor. Joseph Smith did the talking. There were present Joseph and Hyrum Smith, John Taylor, and some others who also spoke on the subject; there were twenty-five I suppose at the meeting. At that meeting Joseph Smith, the present presiding officer of the complainant church, was selected by his father as his successor. He was ordained and anointed at that meeting. Hyrum Smith, the Patriarch, anointed him, and Joseph his father blessed him and ordained him, and Newell K. Whitney poured the oil on his head, and he was set apart to be his father's successor in office, holding all the powers that his father held. I cannot tell all the persons that were present, there was a good many there. John Taylor and Willard Richards, they were two of the "Twelve," Ebenezer Robinson was present, and George J. Adams, Alpheus Cutler, and Reynolds Cahoon. I cannot tell them all; I was there too.

I know what the doctrine of the old church was from the time it was established in 1830 down to 1844, with reference to marriage. The doctrine of the church was, that one man could have one wife

only. The doctrine of polygamy was never taught by the elders, or high priests, or by any other person or persons of authority in that church, so far as I know or ever heard between the years 1830 and 1844. The doctrine of polygamy has never been, to my knowledge, taught or practiced by any person in the Reorganized Church, the complainant herein, since its organization, because we did not believe in it; and if anybody had taught or practiced it, they would have been cut off mighty quick. None of the books of the Reorganized Church teach or countenance the practice of polygamy, nor did any of the books of the original church teach or indorse that practice. Exhibit C, being King James' translation of the Bible, was used by the elders and members of the original church as a book of doctrine. Exhibit DD, being the original Book of Mormon, was one of the books of doctrine of the old church, and is also a book of doctrine of the Reorganized Church. It was acknowledged and accepted both in the old church and the Reorganized Church. The book marked exhibit E, being the Book of Doctrine and Covenants, was indorsed by the original church, and also by the Reorganized Church, the plantiff in this case, being the 1835 edition. Exhibit F, being the 1874 edition of the Book of Mormon, published at Lamoni, Iowa, is the same in text as exhibit DD, and is correct, and was recognized by the original church as a book of doctrine, and is also by the Reorganized Church. Exhibit G, being the 1845 edition of the Book of Doctrine and Covenants; and exhibit H, being the 1846 edition of the same book; and exhibit I, being the 1852 edition of the same book; and exhibit J, being the 1880 edition of the Book of Doctrine and Covenants, were all recognized books of doctrine of the original church from 1830 to 1844. The books themselves show what portions have been added since 1844.

The book now handed me is the *Times and Seasons*. That was the authorized church publication recognized as official up to the time of Joseph and Hyrum Smith's death in 1844, and up to that date is recognized and acknowledged as offcial by the Reorganized Church. The *Times and Seasons* was the official church publication or paper until 1844, and was recognized as such by the church, and is so recognized by the Reorganized Church. The books marked exhibit K and exhibit L, being the *Times and Seasons* from November, 1839, to November 11, 1842, volumes 1, 2, and 3, were published by the church at Nauvoo, Illinois, of which Joseph Smith was the head or president. It was published by authority of the church, and was recognized by the church as the church paper and authority. Joseph Smith was editor part of the time; John Taylor was the editor at the time Joseph Smith was killed. John Taylor, who appears as the editor of the *Times and Seasons*, is the same person who went with the Brighamite portion of the church to Salt Lake Valley. In 1844, Joseph Smith was President of the church, and Bishop Miller was President of the High Council at Nauvoo, Illinois. William Marks was President of the Nauvoo Stake, and also President of the High

13 Council at the time Joseph Smith was killed in 1844. This William Marks sustained the relationship to the Reorganized Church, after 1844, of Counselor to Joseph Smith the present President of the Church. He was a member of the original church, President of the High Council in 1844, when Joseph Smith was killed; President of the Nauvoo Stake at that time; afterwards was a member of the Reorganized Church, and was one of the President's counselors.

CROSS-EXAMINATION.

I was born in England; I landed in this country at New Orleans on the first day of April, 1842; and at Nauvoo, Illinois, the thirteenth of April, 1842. I was a member of the church when I came to Nauvoo. Before I came to this country I took a certificate from the church in England, certifying that I was a member there, and when I came here handed it to the President of the branch, and was recognized as a member here; the branch at Nauvoo, Illinois. At that time there were about ten thousand (10,000) Latter Day Saints in
14 Nauvoo. There were about twenty-five thousand (25,000) there when Joseph and Hyrum Smith were killed in 1844. There were branches of that denomination at other places at that time; one at Carthage, one at Fort Madison, and at other places. At the time that Joseph Smith was killed there were about two hundred and fifty thousand (250,000) adherents or members in this country and other countries; there were more in England than at Nauvoo. I do not know how many there were in the United States; I guess probably one half the membership, or more. I do not know how many members there are in the Reorganized Church; I suppose there are
15 over thirty thousand (30,000) in this country, and there are some in other places. Now that is my opinion as to the number.

I took the position of private secretary to Joseph Smith on the eleventh day of June, 1842. Was in the office before that, but not as his secretary. My duties were to keep his correspondence, letter books, and everything of that nature belonging to the office as his secretary. He had a good deal of correspondence. I did not keep the historical records nor the church records. There was a historian for that purpose; William Richards, who lived at Nauvoo, was the historian. James Sloan was Church Historian before William Richards; he is now dead. I do not know whether he went to Salt Lake or not. I think the records were all taken to Salt Lake; I know all the church records that I had anything to do with were taken there; I know they were, because I packed them myself. I
16 was ordered by Joseph Smith's administrator, Mr. Joseph Coolidge, to pack them up. I did so, and delivered them to the "Twelve" according to his instructions.

I stayed at Nauvoo until I had finished up my business with the church, then went to Winter Quarters, at Omaha, Nebraska, where Brigham Young and the rest of his followers were. I went there to make my report to what claimed to be the High Council, or "Twelve." I suppose the Twelve went from there to Salt Lake, but

I did not go with them. I went to Omaha, in the fall of 1847; got there in December, and stayed there until early in the following April. I was appointed private secretary of Joseph Smith in 1842, held that position until he was killed, the twenty-seventh day of June, 1844, and had certain records in my possession as private secretary all the time until 1847, when they were turned over by order of Joseph Smith's administrator, to the "Twelve," at Omaha. And at Omaha, in 1847, I helped to repack the church records, and
17 left them in the possession of the "Twelve;" then I returned to Alton, Illinois.

The persons who composed the Twelve at that time, were Brigham Young, Heber C. Kimball, Orson Hyde, George A. Smith, William B. Smith, Wilford Woodruff, Parley Pratt, Orson Pratt, Lyman Wight, J. E. Page, John Taylor, and Amasa Lyman. All those persons composing the "Twelve" went to Salt Lake City with Brigham Young, except John E. Page, Lyman Wight, William B. Smith, and Amasa Lyman; they refused to follow his leadership. I had never lived at Alton prior to 1848, but had friends living there. I did not believe in the way they were doing. There was so much wickedness and corruption among them that I could not stay with them; all kinds of wickedness, drinking, carousing, and everything else. I do not mean in the church at Alton, but mean the followers of Brigham Young at Omaha. That was the reason I went to Alton; I was not suited with their practices; their drinking, wickedness, and carousing. That was not what Joseph Smith had taught, and so I left them, disgusted.

I do not know how many there were at Omaha; there were a great many started for there, but they got scattered in every direction. I do not know how many there were in Winter Quarters at Omaha,
18 nor how many belonged to the branch at Alton, Illinois. When I went there I did not become a member of the branch; I had left the church entirely, and did not have anything to do with them. I afterwards became a member of the Reorganized Church of Jesus Christ of Latter Day Saints, in September, 1865. I remained out of the church about seventeen (17) years. I became a member of the Reorganized Church at Alton, Illinois; I joined a branch at St. Louis, because there was none at Alton. I was pretty well acquainted with the movements of the Reorganized Church from the time of its organization to the time I joined it; and the reason I became a member was because I knew that Joseph Smith was the right man to lead that church; I knew that he had been ordained and set apart by his father as his successor in office, and he came out and made that proclamation to the conference of the Saints, and they received it.

I always believed in the doctrine and teaching of the church, and intended to go back to it when the right time came, and the right man assumed the leadership. I did not become a member earlier, because Joseph Smith was a boy about twelve (12) years old when he was ordained, and he was not to take his place as the President of

the Church until the Lord called him; and he did not become the president until 1860.

The ordination of young Joseph Smith, the gentleman who is now the President of the Reorganized Church of Jesus Christ of Latter Day Saints, took place in the winter of 1843. I do not know the ex-
19 act date; if I had the history or minutes of that meeting, I could tell you; but the history or minutes of the meeting all went to Salt Lake City, and it has been so long that I cannot remember the date. Of course I do not know whether the records ever reached Salt Lake or not; they started for that place; I was not with them; I cannot say what became of them after they left my hands.

The ceremony of the ordination of young Joseph Smith by his father was performed at Nauvoo. Young Joseph was called into the meeting, anointed with oil by his Uncle Hyrum Smith, Patriarch of the church. Newell K. Whitney, the Bishop of the church, held the oil, and Joseph Smith, his father, laid his hands upon him, and blessed him and ordained him to be his successor in office. I am ac-
21 quainted with the Book of Mormon, with the book of Doctrine and Covenants, and they are the standard books of the church. I have read them and do read them regularly. They do not teach that anyone can be a prophet unless they have the Urim and Thummim.

I was acquainted with and familiar with the prevailing doctrines
23 of the church, at the time it was under the presidency of the elder Joseph Smith. They were the same then that they are now, according to what is taught in these books of doctrine of the church. The doctrine of Baptism for the Dead was taught at one time under the Presidency of Joseph Smith, and Paul believed in and taught it. I have never heard the Reorganized Church say anything about that doctrine. I am a priest and a preacher in the Reorganized Church, and I do not know whether the doctrine of Baptism for the Dead has ever
24 been taught in the Reorganized Church. I do not know that it has, but I believe that it has not been taught in it. It is not taught that I know of. It was a doctrine of the church in the days of Joseph the Martyr, but I have never heard it taught in the Reorganized Church. I do not know of its being practiced in the Reorganized Church, and it was not practiced in the original church for a long time before Joseph was killed. The doctrine of the gathering of the Saints I preached in the old church a great many times. It was simply directing the Saints to gather together in holy places and to be true to the doctrine and teaching of the word of God. Holding property in common was not taught in the old church, to my knowledge. I have never heard it preached in the Reorganized Church either; and it is not the doctrine of the Reorganized Church.

I never heard the doctrine of holding property in common preached in either church. I have heard the doctrine of polygamy taught, and I hate and despise it. It is a doctrine of the Devil; there is no question about that. I do not believe in it, or countenance it in any way. I heard Brigham Young preach it at Nauvoo,

after Joseph Smith was killed; that was one reason why I left the church. I saw enough to convince me that it was time for me to leave the church. They were preaching the doctrine of polygamy
25 when they left Nauvoo, in 1846. I do not know whether all that believed in the doctrine left or not; I expect they all did. I was in Nauvoo at the time the *Expositor* office was destroyed. I was not fa-
26 miliar with the paper, had nothing to do with it, never read one; knew there was a paper published there by that name. Do not know by what authority the paper was published. I never heard anything about the doctrine of polygamy until after the time Joseph Smith was killed. I do not think I ever heard of such a thing before his death. I knew Austin Cowles and William Law; they were at one time members of the old church, but not members at the time of the death of Joseph Smith. I know when William Cowles left
27 the church; he was expelled for the crime of adultery. It was not for polygamy, but for adultery. The church never took any action on the question of polygamy, before the ordination of young Joseph; there was no occasion for any action on the question of polygamy.

The church did take action as a body on the question of the ordination of young Joseph as his father's successor; the church consented to it. That was done first by the indorsement of the High Council, and then it was brought up before the whole body of the congregation, the whole people; and there were thousands there. That was done at the meeting held in the grove at the east end of the temple. I should think there were three thousand (3,000) there.
28 There was a record kept of it, but the record was taken to Salt Lake. I was present on that occasion. There was a vote taken, the congregation voted, and agreed to the appointment of young Joseph as the successor of his father. The vote was taken by raising the right hand I think. A negative vote was taken, but nobody voted in the negative; Joseph Smith had been preaching that day, and at the close of the sermon made the announcement to the congregation, that his young son Joseph had been appointed as his successor. The question was submitted to the congregation for approval or rejection. The congregation or members knew that the subject would be brought up that day. This vote was taken after the ordination of young Joseph.

I have read the first edition of the book of Covenants through. This book is the first Book of Covenants I had; I do not know whether there was one before that or not. I cannot keep in my memory all the doctrine taught in this book, but I know about what
29 it contains, and what is in it. This book contains the same doctrine that I first saw and read in 1838, as far as I can remember. I do not know any difference in the books. I have read it through more than once, but I cannot remember everything in it. My recollection is that they are the same. The book in testimony contains the same doctrine as the book I first read. Of course I cannot specify every sentence that is in it; I think the two books are the same entirely.

This is the 1835 edition; the one I first read was published in 1835. I have read that one there, over and over again, the edition of 1848. I think the 1835 edition contains the same doctrine entirely. I have read the Book of Covenants, and the 1835 and 1848 editions were the same. The particular book that you hold now, I probably have not read; but these books are all published in the same edition. I have read this same edition but in another book.

I have read the Book of Mormon time and again; cannot say I ever saw this identical book before. I read the matter that is in the par-
30 ticular book you present, but it might have been in another volume, and it might be that I have read it in that one. I have read out of a great many of these books. They are all alike so far as text is concerned. I have not read the Palmyra edition of the Book of Mormon; the text is the same in all the editions.

I have read the *Times and Seasons* before; I have them at home, every one of them, six (6) volumes. I do not know that I ever saw
31 those identical books before, but I have seen the *Times and Seasons*, have them, have read them, and have them now.

I have the Inspired Translation of the Holy Bible; I have read it, but not in the old church, or in Joseph's day. It was not published then; it had not been printed. It was in manuscript the time he died. It was published afterwards by the Reorganized Church. It was translated by Joseph Smith, president of the original church, prior to 1844. I have the book called the *Times and Seasons*, I cannot say that I have read this identical book, but I have read the same kind, the same issue. There never was but one edition of the book, and I have read that. I read one just like this.

I left the church on account of its corruption, after Joseph was killed, but not right away after he was killed. As soon as I finished my work as secretary, and made my report, I left. The church I now belong to, the Reorganized Church of Jesus Christ of Latter Day Saints, is the same church, teaches the same doctrine as Joseph taught, and is the same church I belonged to in 1844, at Nauvoo. It
33 is the same church that was established in 1830, and continued until 1844, the time Joseph was killed. It is not the same church that I left; that was the apostate church; they had denied their faith and principles. After 1844, I left them, and the church I now belong to is the reorganization of the old church, as it existed in the days of Joseph the Martyr.

I have heard Joseph the Martyr preach many times; never heard Joseph Smith announce that there should be no more baptisms for the dead, but I heard of it. That announcement was made, as I recollect, in America, before I came here. I witnessed one baptism for the dead after I came to this country, that was myself. I have been in the temple at Nauvoo many times; I used to measure the stone work, and carpenter work, and all that. There was a font in the temple for the baptism for the dead. It stood on twelve (12) oxen, cut out of stone. It never was used, because Joseph Smith

was killed and the temple was never finished. There was a General Conference of the church held every half year, while I was in Nauvoo, they held them every six (6) months then. They held their meetings in the grove; there was no building large enough to accom-
35 modate them. I was acquainted with the organization of the church in Nauvoo, Illinois; do not know that I can give all the details of the organization.

The organization was the same as the organization of the church now. There were district presidents; I am sure there were district presidents; I know there were. At that time we had rules of order. The present Reorganized Church has a book of Rules of Order.
37 The Reorganized Church has rules of representation; that is, they have delegates to General Conference sent from all the branches. It is a system that represents the branches. We had the same system in the original church, of representation, that we now have in the Reorganized Church. We had conferences the same as we do
38 now. We might not have them as often now as we did then. I do not know whether they allowed members and sisters to act as delegates in the conferences at Nauvoo. I have never seen lay members or ladies delegates in the Reorganized Church.

I knew William Marks at Nauvoo; he was a brother in the church, was a high priest, member of the High Council, and president of the stake, at Nauvoo. I believe he is dead now. I did not say the "Twelve" were all at Omaha; there were only eight of the persons I named as the members of the "Twelve" that went to Omaha. There
39 was such a thing in the old organization as "stakes;" Nauvoo was a stake. There were a great many different districts; Kirtland was once a stake, probably the first one.

REDIRECT EXAMINATION.

When I was at Omaha, at Winter Quarters, in 1847, quite a number of the persons I named as members of the Twelve were not present. The church there, (it would be hard to say what it was,) was not what it was in the days of Joseph Smith. It was the apostate church, for they did not carry out the principles that were taught
40 by the books, or Joseph Smith. There were all manner of abominations committed among them there. They taught and practiced these abominations openly. They did not teach or practice the same doctrine that was taught and practiced at Nauvoo, prior to 1844, and during the lifetime of Joseph Smith; they practiced quite the contrary. I withdrew from the church there on account of its wickedness. They had become so corrupted and wicked, that I could not tolerate them, so I withdrew; but the original faith, I believed in it always, all the time, from the day I was baptized, and do yet. The first Book of Doctrine and Covenants I ever saw I got in 1838, in England.

I turned over, by direction of the administrator of Joseph Smith, to the Twelve, all the papers and records that I had; but of course
41 I did not have them all. I do not know what the other men had. I

did not have control of the record of the membership of the church. I think James Sloan was the man who at that time had something to do with the records, and that was what he did I think. The records I refer to as having turned over to the Twelve, are the records of Joseph Smith's private office, and the records that belonged to the building of the temple, and the records of deeds. I recorded them, or a great many of them, and had the records in my office.

The original manuscript of the Holy Scriptures was not in Joseph Smith's private office. That was in the possession of his wife, Emma Smith. That was not turned over to the administrator of Joseph Smith. It was not turned over to anyone, because it did not belong to the church. Emma Smith never turned it over to anybody until it was turned over to the Reorganized Church for publication.

The time that elapsed between the selection of Joseph Smith as his father's successor and the time of the public announcement, was four (4) or five (5) days. The selection and confirmation was on Wednesday evening, and on the Sunday following, after the sermon was delivered, Joseph Smith made the declaration that his son Joseph had been selected as his successor in office.

The general talk in Nauvoo was that young Joseph would succeed his father as leader of the church. I do not know whether the Twelve took any action in their own quorum about the selection, I was not at their meeting.

42 Brigham Young, said to me at different times, "I am not the leader of the church, nor the prophet of the church; we know who that is; it is Joseph, the son of Joseph the Martyr."

I mean by this ordination of young Joseph as his father's successor, that he was ordained to the same position that his father was in, to be the leader of the church, the First Elder of the church; he was ordained as his father's successor. His authority would not commence until after the death of his father, nor would he take his position until the proper time came.

RECROSS-EXAMINATION.

43 Joseph Smith prior to 1844, held the position of prophet, seer, and revelator to the Church of Jesus Christ of Latter Day Saints. He held the Melchizedek priesthood. Holding that priesthood would constitute him the Presiding High Priest or first Elder in the Church.

There was no ordination of young Joseph to be a prophet, priest, and king. The authority for selection and ordination of Joseph Smith to be his father's successor in office, was by revelation. I do not know whether the ordination was in the usual form or not. I never saw except the one ordination of that kind. I do not know by what authority Hyrum Smith did the anointing. His authority was all right. There is authority in the books of doctrine of the church for using oil at an ordination. Aaron was anointed with oil at the

time of his ordination. The word *king*, was never used during the ordination of young Joseph Smith as his father's successors.

I heard what is known as the "King Follett" sermon preached. That sermon was published. Joseph Smith did not in that sermon teach the plurality of gods. It was the general understanding and belief among all the members of the church at Nauvoo, that young Joseph was to be his father's successor. I never heard any dissent from it, either before or after the ordination, or before or after the declaration made by Joseph Smith at the meeting at the east end of the temple, that his son had been selected as his successor. That declaration was made to the people.

There might have been three thousand (3,000) or more present; there might not have been quite so many. I do not know the exact number. The people were assembled in Nauvoo, at the east end of the Temple; there was a stand there, and Joseph Smith preached there that day, and made the announcement to the congregation that his son Joseph had been selected as his successor, and that was the time that the people sanctioned it. The people who were there present at that time and sanctioned that ordination belonged to the Church of Jesus Christ of Latter Day Saints. The people were not called together on the Sunday following the ordination of young Joseph Smith for the purpose of sanctioning the selection and appointment. It was the regular preaching service every Sunday afternoon, there was no calling about it. They gathered to hear the preaching and at that meeting it was declared by Joseph Smith himself that the selection and ordination of his son Joseph as his successor in office had been made, and the people agreed to it, by a vote in the usual way, voting by the uplifted hand.

---

47 JOSEPH SMITH of lawful age being produced, sworn, and examined on the part of the plantiff, testified as follows, in chief:—

I live at Lamoni, Decatur county, Iowa; lived there since the fall of 1881. Prior to that time I lived at Plano, Kendall county, Illinois. I lived at Plano, Illinois, from 1866, to 1881. I lived at Nauvoo, Illinois, from 1839, to 1866. I lived in Missouri a while and in Ohio a while; but I was very young at that time. I am the son of Joseph Smith, who was the President of the Church of Jesus Christ of Latter Day Saints. I was born November 6, 1832, at Kirtland, Ohio.

I am the President of the Reorganized Church of Jesus Christ of Latter Day Saints, and its Presiding Elder, and am also engaged as the Editor of their church publication called the *Saints' Herald*. I have been the Presiding Elder of that church since April 6, 1860.

The way the Reorganization of the Church of Latter Day Saints was effected, and the parties that effected the reorganization are in substance as follows:—

It began in the year 1851, as I understand it, by the meeting together of persons who were, or had been members of the church,

but who refused to recognize the western authorities, by their convening themselves together and conferring in regard to the conditions as they then existed. After they had done this, they issued a call, or an appeal, to the scattered members of the church, and they met in conference in the year 1852, and appointed some of their members as missionaries, and sent them out to look after the scattered individuals.

I became acquainted personally with the movement sometime in 1856, by the visit to me of two of them. I united with them in the spring of 1860, on April 6. I met with them in conference at Amboy, Lee county, Illinois. I had been baptized into the church by my father in the fall of 1843, or the spring of 1844, the date I do not recollect, and have no record of the date. I was received into the Reorganized Church, like others, on my original baptism, and became identified with the movement, and was chosen to preside over its reorganization, and was ordained as a high priest, and chosen to preside over the body, and ordained by them.

William Marks, Zenas H. Gurley, Sr., and W. W. Blair, are the ones who officiated at the ordination. William Marks was a member of the original church, I recollect him as being a member as long as I can remember any man outside of my own family. Zenas H. Gurley was a member of the original church in my father's day, but I did not know him then, but I knew William Marks well. At the time I knew William Marks in Nauvoo, he was a high priest and presided over the stake at Nauvoo, and over the High Council of the stake. He was presiding officer over the stake and the High Council there at Nauvoo. That was the highest office in the local organization.

I do not know personally what position Gurley held in the old church, further than by general reputation.

48 The meeting at Amboy, Illinois, at which I united with the church was the yearly conference of the organization, the General Annual Conference.

I was chosen as the presiding officer of the church, by a motion being made to that effect, and put to the vote of the conference, by a motion and vote of the people there assembled—the vote on the motion properly made by some person, and properly seconded, which was put to the meeting by the presiding officer. The vote was taken by a show of hands, and the vote was unanimous.

My recollection is now that Zenas Gurley, Sr., was the presiding officer at that time. William Marks was present, but I believe Zenas Gurley, Sr., was the presiding officer of that conference.

The conference was composed of persons who had been members of the old church principally, together with the number that had been baptized by means of their preaching. There were persons there from other States than Illinois; there were members present from Wisconsin, from Iowa, from Illinois, and there may have been members from other States.

There were present at that conference, that were members of the church, possibly one hundred and fifty (150) people; there may have been more. The meeting was in a hall, and it is hard to say how many were present, but I think there were at least that many.

Besides Elders Marks and Gurley there were quite a number present, who were members of the old church, but I cannot state the number definitely. Among the people that were present were Elders Isaac Sheen, Dwight Webster, Zenas Whitcomb, Israel L. Rogers, and Hiram P. Brown. I do not know that I can now recall to mind the number, but at that time I doubtless remembered and knew who were there that were members of the old church.

I can only make an estimate as to the number of elders, high priests, and other officers of the old original church who had united themselves with the reorganization prior to 1860. I can only approximate the number, but there must be some thousands of them.
50 The major part of that body were members of the old church, and had united themselves with the reorganization either before or since 1860. I cannot say as to the period prior to 1860, but since that time there has been a great many of them united with the church as it now exists.

My Uncle William Smith, and his three sisters, and the husband of the youngest of them, Arthur Milliken, William Aldrich, John Gaylord, John C. Gaylord, Archibald Wilsey, Asa Manchester, and a great many others have united with the Reorganized Church, who were members of the old church. How many in the aggregate I am unable to say. Those are the ones I remember at the present time. They are not all, by any means; I might think of a great many more if I had time to think it over.

After my father's death, my mother remained at Nauvoo, until in the fall of 1846, September, I think. At the time of the disturbance there, we then moved north to Whitesides county, where we remained until February, 1847; we then returned to Nauvoo, and remained there.

My father's mother went to Knoxville, Illinois, and resided there a while with her daughter. She remained there and at Nauvoo and Colchester, with my family and her youngest daughter, until she died, about 1855.

My Uncle William removed first to Knoxville, then near Amboy, and from there to Pennsylvania, and finally settled some twenty (20) odd years ago in Clayton county, Iowa, where he is living at the present time.

My father's brothers, Hyrum and Samuel, both left families. The family of Hyrum and a part of Samuel's family went to Salt Lake Valley. Part of Hyrum's family did not remove immediately, but his oldest daughter went in 1860 or 1862 to Salt Lake Valley.

The three (3) sisters of my father did not leave Illinois at all; they did not go west. They with their children remained in Illinois, and
51 Catherine is still living there, but the other two are dead. Two of

my father's brothers were living at the time he died, Samuel and William. Samuel died soon after my father, about two months later. William is still living, or was up to a day or two ago. He is a member of the Reorganized Church, and all the family united with the Reorganized Church, excepting my grandmother, and she died in 1855, before I became connected with it.

My mother went with me to the Amboy conference in 1860, she was received as a member at the same time I was. She was a member of the original church. I mean, when I say the subject of the Reorganization of the church came to my knowledge in 1856, that before that I had simply heard a rumor of the gathering of the people, and the work of reorganization. I heard of it at that time, or before that time; but at that time they brought a particular message to me, and asked me to come and join with the movement.

Samuel Gurley, son of Zenas Gurley, and Edmund C. Briggs came to see me. When I went to the Amboy conference in 1860, the first thing done in which I was personally interested was, I made application to be received upon my original membership, and it was so done upon motion and vote, and my mother was received the same way. Both were received as members, and our original membership acknowledged at that time. After I became a member by vote of the conference, I was, by the vote of the body, ordained to the Melchizedeck priesthood, or made a High Priest, and was then chosen to preside over the priesthood and the church. I was chosen to preside by vote of the people. That vote was taken upon a motion properly put to the conference, and voted upon, and declared carried. I think the vote was taken by uplifted hand, in the same method as the former vote.

52 I was ordained at that conference by President Marks, Zenas Gurley, and W. W. Blair. They officiated at the ordination. President Marks was at that time a High Priest. He was a High Priest in the original church, and at the time I was in Nauvoo, he was President of the Stake, and also President of the High Council, at the time of my father's death I mean.

From the time of the disorganization of the old church, up to 1860, and 1861, there were two branches of that church that remained intact; one in the northern part of Illinois and the southern part of Wisconsin, and one in Jeffersonville, in Wayne county, presided over by Thomas P. Greene. Mr. Greene, with most of his members, were received into the Reorganized Church. Their branch was organized about 1842.

I was about twelve years old when my father died, would have been twelve on the sixth day of November, and he was killed on the 27th day of June, 1844.

About my selection by my father to be his sucoessor in office, I remember of being called in his office, or into a room adjoining his office, and receiving the laying on of hands, and a prophetic blessing or setting apart, whatever it may be called. I remember that, and

also remember that just before his departure for Carthage, with a number of others, I was called into a room in the Mansion House, and there again received the laying on of hands, and the blessing. I was also present at a meeting in the grove near the temple, and I remember my father laying his hands on my head, and saying to the people that this was his successor, or was to be his successor. I remember some of the parties that were on the stand, a few of them I remember, but I do not remember all of them. William Marks, George J. Adams, and I think Willard Richards were on the stand at the time.

I am acquainted with the faith and doctrines of the original church, as they are laid down in the public records, and the books of the church. I am also acquainted with the doctrine and faith of the Reorganized Church. I am also acquainted with the doctrine that was preached when I was a boy, and was taught in the Sunday school.

So far as I can comprehend, the disruption and disorganization of the church occurred from the apparent usurpation of authority on the part of President Young, and some of his compeers, and the practice or private teaching of the doctrine, if it can be called a doctrine, of the plurality of wives; to which practice and teaching a great many refused to accede, my mother and President Marks being among the number, and others that I remember. It was culminating or rather brewing for some time, but culminated as I understood it in the winter of 1846, when a great many members of the church refused to follow these teachings and withdrew.

53 The political troubles that occurred there at that time, I do not remember very much about, as I was too young to retain any very distinct recollection regarding them, and I may say that about all I know is what I heard about that matter. They were driven out from the city, and scattered around, and a great many of them were scattered all throughout Iowa, and this western country, and a great many more went east and settled down in different places. The principal cause of this disruption and scattering of the church was due to the introduction of doctrines, that were not in accordance with the published doctrine or faith of the church that the people had been taught or baptized into. Volume 3 of the *Times and Seasons*, which is marked exhibit L, contains an epitome of faith of the original church. It is found commencing with these words, "We believe," on page 709 of exhibit L, down to the words "after these things," on page 710. It is as follows:—

"We believe in God the eternal Father, and in his Son Jesus Christ, and in the Holy Ghost.

"We believe that men will be punished for their own sins, and not for Adam's transgression.

"We believe that through the atonement of Christ all mankind may be saved by obedience to the laws and ordinances of the Gospel.

"We believe that these ordinances are, 1st, Faith in the Lord Jesus Christ; 2d, Repentance; 3d, Baptism by immersion for the remission of sins; 4th, Laying on of hands for the gift of the Holy Ghost.

"We believe that a man must be called of God by 'prophecy,' and by 'laying on of hands' by those who are in authority to preach the Gospel, and administer in the ordinances thereof.

"We believe in the same organization that existed in the primitive church; viz., apostles, prophets, pastors, teachers, evangelists, etc.

"We believe in the gift of tongues, prophecy, revelations, visions, healings, interpretation of tongues, etc.

"We believe the Bible to be the word of God as far as it is translated correctly; we also believe the Book of Mormon to be the word of God.

"We believe all that God has revealed, all that he does now reveal, and we believe that he will yet reveal many great and important things pertaining to the kingdom of God.

"We believe in the literal gathering of Israel and in the restoration of the ten tribes. That Zion will be built upon this continent. That Christ will reign personally upon the earth, and that the earth will be renewed and receive its paradisaic glory.

"We claim the privilege of worshiping Almighty God according to the dictates of our conscience, and allow all men the same privilege, let them worship how, where, or what they may.

54 "We believe in being subject to kings, presidents, rulers, and magistrates, in obeying, honoring, and sustaining the law.

"We believe in being honest, true, chaste, benevolent, virtuous, and in doing good to all men; indeed, we may say that we follow the admonition of Paul, 'we believe all things, we hope all things;' we have endured many things, and hope to be able to endure all things. If there is anything virtuous, lovely or of good report or praiseworthy, we seek after these things."

My father's name is signed to the epitome of faith about which I have been testifying. The pamphlet marked exhibit M is an authorized publication of the Reorganized Church of Jesus Christ of Latter Day Saints, and it contains the epitome of faith of the Reorganized Church. The epitome of faith is found on pages 16 and 17 and reads as follows, omitting the references to the Bible and other church publications shown therein:—

"EPITOME OF FAITH.

"We believe in God the eternal Father, and his Son Jesus Christ, and in the Holy Ghost.

"We believe that men will be punished for their own sins, and not for Adam's transgression.

"We believe that through the atonement of Christ all men may be saved by obedience to the laws and ordinances of the Gospel.

"We believe that these ordinances are,—

"1. Faith in God, and in the Lord Jesus Christ.

"2. Repentance.

"3. Baptism, by immersion, for the remission of sins.

"4. Laying on of hands for the gift of the Holy Ghost.

55 "5. We believe in the resurrection of the body; that the dead in Christ will rise first, and the rest of the dead will not live again until the thousand years are expired.

"6. We believe in the doctrine of Eternal Judgment, which provides that men shall be judged, rewarded, or punished, according to the degree of good or evil they shall have done.

"We believe that a man must be called of God and ordained by the laying on of hands of those who are in authority, to entitle him to preach the Gospel and administer in the ordinances thereof.

"We believe in the same kind of organization that existed in the primitive church; viz., apostles, prophets, pastors, teachers, evangelists, etc.

"We believe that in the Bible is contained the word of God so far as it is translated correctly. We believe that the canon of Scripture is not full, but that God by his Spirit will continue to reveal his word to man until the end of time.

"We believe in the powers and gifts of the everlasting gospel; viz., the gift of faith, discerning of spirits, prophecy, revelation, healing, visions, tongues, and the interpretation of tongues, wisdom, charity, brotherly love, etc.

"We believe that marriage is ordained of God, and that the law of God provides for but one companion in wedlock, for either man or woman, except in cases where the contract of marriage is broken by death or transgression.

"We believe that the doctrines of a plurality and a community of wives are heresies and are opposed to the law of God. The Book of Mormon says: 'Wherefore, my brethren, hear me, and hearken to the word of the Lord; for there shall not any man among you have save it be one wife, and concubines he shall have none, for I, the Lord God delighteth in the chastity of women. And whoredoms are an abomination before me saith the Lord of Hosts.'

"We believe that in all matters of controversy upon the duty of man towards God, and in reference to preparation and fitness for the world to come, the word of God should be decisive and the end of dispute, and that when God directs, man should obey.

"We believe that the religion of Jesus Christ as taught in the New Testament Scriptures, will, if its precepts are accepted and obeyed, make men and women better in the domestic circle; better citizens of town, county, and State; and consequently better fitted for the change which cometh at death.

"We believe that men should worship God in spirit and in truth, and that such worship does not require a violation of the constitutional law of the land.

"We claim the privilege of worshiping Almighty God according

to the dictates of our conscience, allow all men the same privilege, let them worship how, where, and what they may."—Epitome of Faith and Doctrine.

56 The two epitomes of faith are mainly alike. There are some differences in the language that is used, and in regard to the question of marriage, this matter being stated more fully in our reorganized epitome of faith, and in the enlargement of the texts cited; but the principles are the same in both. I do not remember that there is any specific principle, in the epitome of faith of the original church, that is not contained in the epitome of faith of the Reorganized Church, except as I stated before on the question of marriage, the principle is the same, but it is enlarged in the epitome of faith, and specifically mentions the plurality of wives, which is not in the epitome of faith in the original church. There is nothing stated at all in the original epitome of faith on that matter I believe.

The book handed me, marked exhibit E, is the Book of Doctrine and Covenants. It was published in 1835, and contains lectures on faith and doctrine, and the commandments of God to the church, and the rules and regulations adopted by the church in 1835. The doctrine of the original church with reference to marriage was monogamy; one man and one wife, one man and one woman only to be united in wedlock. The doctrine of the original church as to marriage is found on page 251, section 101, of exhibit E. The subject of the title is "Marriage." Section 10 prescribes the forms that shall attend the marriage ceremony, etc.; the duties of parents towards their children, and of children to parents, etc.

There are other parts of this book that refer to the same subject. In paragraph 7, of section 13, of exhibit E, there is a commandment to the church, and which is recognized by the church in reference to marriage. That is on pages 121 and 122, and on page 192, para-

57 graph 3, section 65, of exhibit E, there is a declaration in reference to marriage, or the connection between husband and wife. The publication of the Doctrine and Covenants of the years 1845, 1852, 1854, and 1869, contain the same statement with reference to marriage as the statement on that subject in exhibit E, the 1835 edition of the same book, it is the same in every publication of the Doctrine and Covenants that is used in every faction of the church, that I know anything about, down to 1869. They do not contain any other form or doctrine of marriage, than what is set out in exhibit E, that I now hold in my hand. There is no other form of marriage indorsed or recognized than what is set out in exhibit E, and that reads as follows:—

"MARRIAGE.

"1. According to the custom of all civilized nations, marriage is regulated by laws and ceremonies; therefore, we believe that all marriages in this Church of Jesus Christ of Latter Day Saints, should be solemnized in a public meeting or feast, prepared for that purpose; and that the solemnization should be performed by a pre-

siding high priest, high priest, bishop, elder, or priest, not even prohibiting those persons who are desirous to get married, of being married by other authority. We believe that it is not right to prohibit members of this church from marrying out of the church, if it be their determination so to do, but such persons will be considered weak in the faith of our Lord and Savior Jesus Christ.

"2. Marriage should be celebrated with prayer and thankgsiving; and at the solemnization, the persons to be married, standing together, the man on the right, and the woman on the left, shall be addressed, by the person officiating, as he shall be directed by the Holy Spirit; and if there be no legal objections, he shall say, calling each by their names: 'You both mutually agree to be each other's companion, husband and wife, observing the legal rights belonging to this condition; that is, keeping yourselves wholly for each other, and from all others, during your lives,' and when they shall have answered, 'Yes,' he shall pronounce them 'husband and wife,' in the name of the Lord Jesus Christ, and by virtue of the laws of the country and authority vested in him. May God add his blessings, and keep you to fulfill your covenants from henceforth and forever. Amen.

"The clerk of every church should keep a record of all marriages solemnized in his branch.

"All legal contracts of marriage made before a person is baptized into this church should be held sacred, and fulfilled. Inasmuch as this Church of Christ has been reproached with the crime of fornication and polygamy, we declare that we believe that one man should have one wife; and one woman but one husband, except in case of death, when either is at liberty to marry again. It is not right to persuade a woman to be baptized contrary to the will of her husband, neither is it lawful to influence her to leave her husband. All children are bound by law to obey their parents; and to influence them to embrace any religious faith, or be baptized, or leave their parents without their consent, is unlawful and unjust. We believe
58 that all persons who exercise control over their fellow beings and prevent them from embracing the truth, will have to answer for that sin."

Paragraph 7, section 13, on pages 121 and 122 of exhibit E, is as follows:—

"And again I say, thou shalt not kill; but he that killeth shall die. Thou shalt not steal; and he that stealeth and will not repent, shall be cast out. Thou shalt not lie; he that lieth and will not repent, shall be cast out. Thou shalt love thy wife with all thy heart, and shall cleave unto her and none else; and he that looketh upon a woman to lust after her, shall deny the faith, and shall not have the Spirit, and if he repent not, he shall be cast out. Thou shalt not commit adultery; and he that committeth adultery and repenteth not, shall be cast out; but he that has committed adultery, and repents with all his heart, and forsaketh it, and doeth it no more, thou

shalt forgive; but if he doeth it again, he shall not be forgiven, but shall be cast out. Thou shalt not speak evil of thy neighbor, nor do him any harm. Thou knowest my laws concerning these things are given in my Scriptures; he that sinneth and repenteth not shall be cast out."

The book now handed me marked exhibit D is the Palmyra edition of the Book of Mormon, published in 1830. It is the first edition of the Book of Mormon that was published. The original church indorsed that book as a book of doctrine. The Reorganized Church indorses and recognizes that book as one of its standard authorities on the question of doctrine, and has had it printed several times. I do not really know that I could point out all the passages or references that there is in exhibit D on the question of marriage, but I could give some of them. On pages 126 and 127 exhibit D there is an express declaration in regard to the question of having more wives than one. It is declared that they are to be confined to one wife. That is found in the second chapter of Jacob, and is as follows: "But the word of God burthens me because of your grosser crimes. For, behold, thus saith the Lord; this people begin to wax in iniquity; they understand not the Scriptures; for they seek to excuse themselves in committing whoredoms, because of the things which were written concerning David, and Solomon his son. Behold David and Solomon truly had many wives and concubines, which thing was abominable before me, saith the Lord. I have led this people forth out of the land of Jerusalem, by the power of mine arm, that I might raise up unto me a righteous branch from the fruit of the loins of Joseph. Wherefore, I, the Lord God, will not suffer that this people shall do like unto them of old. Wherefore, my brethren, hear me, and hearken to the word of the Lord; for there shall not any man among you have, save it be one wife; and concubines, he shall have none; for, I, the Lord God, delighteth in the chastity of women. And whoredoms are an abomination before me: thus saith the Lord of hosts."

59 That is about all that is necessary to quote, but there is more here in this same chapter that bears on the same subject, but I think I have read enough to show that the practice of polygamy is expressly prohibited. Now on page 558 in the Book of Ether, so called, there is also a reference to the same matter, and also on page 128. The reference on page 128 is as follows: "Behold, the Lamanites your brethren, whom ye hate, because of their filthiness, and the cursings which hath come upon their skins, are more righteous than you; for they have not forgotten the commandment of the Lord, which was given unto our fathers, that they should have, save it were one wife, and concubines they should have none; and there should not be whoredoms committed among them. And now this commandment they observed to keep; wherefore, because of this observance in keeping this commandment, the Lord God will not destroy them, but will be merciful unto them; and one day they shall become a

blessed people. Behold, their husbands love their wives, and their wives love their husbands, and their husbands and their wives love their children; and their unbelief and their hatred towards you is because of the iniquity of their fathers."

The facts are that every member of the church was under obligation to observe the marriage rules given in the Book of Mormon, in the Book of Commandments and Covenants, and also as taught in the Bible, and always to obey the law of the land in regard to it.

With reference to the members of the church being under obligation to observe the marriage rules given in the books of the church, the fifth paragraph, section 13 of exhibit E reads as follows: "And again, the elders, priests, and teachers of this church shall teach the principles of my gospel which are in the Bible and the Book of Mormon, in the which is the fullness of the gospel; and they shall observe the covenants and church articles to do them, and these shall be their teachings, as they shall be directed by the Spirit; and the Spirit shall be given unto you by the prayer of faith, and if ye receive not the Spirit ye shall not teach. And all this ye shall observe to do as I have commanded concerning your teaching, until the fullness of my Scriptures are given," etc.

60 On page 123, paragraph 16 of the same section is found the following with reference to the obligation of the members of the church to observe the laws of the church: "Thou shalt take the things which thou hast received, which have been given unto thee in my Scriptures for a law, to be my law, to govern my church; and he that doeth according to these things, shall be saved, and he that doeth them not shall be damned, if he continues."

And on this same subject, section 4, paragraph 8, exhibit E, reads as follows: "And your minds in times past have been darkened because of unbelief, and because you have treated lightly the things you have received, which vanity and unbelief hath brought the whole church under condemnation. And this condemnation resteth upon the children of Zion, even all; and they shall remain under this condemnation until they repent and remember the new covenant, even the Book of Mormon, and the former commandments which I have given them, not only to say, but to do according to that which I have written, that they may bring forth fruit meet for their Father's kingdom, otherwise there remaineth a scourge and a judgment to be poured out upon the children of Zion; for shall the children of the kingdom pollute my holy land? Verily I say unto you, Nay."

Answering the questions with reference to the priesthood, and how they are to be ordained, and by what authority, section 2 of the second part, paragraph 17, of exhibit E reads as follows: "Every president of the high priesthood, or presiding elder, bishop, high counselor, and high priest, is to be ordained by the direction of a high council, or general conference.

And on this same subject paragraph 11, section 3 of exhibit E reads as follows: "Of necessity there are presidents, or presiding

offices, growing out of, or appointed of, or from among those who are ordained to the several offices in these two priesthoods. Of the Melchizedek priesthood, three presiding high priests, chosen by the body, appointed and ordained to that office, and upheld by the confidence, faith and prayer of the church, form a quorum of the presidency of the church. The twelve traveling counselors are called to be the twelve apostles, or special witnesses of the name of Christ, in all the world; thus differing from other officers in the church in the duties of their calling. And they form a quorum equal in authority and power to the three presidents, previously mentioned. The seventy are also called to preach the gospel, and to be especial witnesses unto the Gentiles, and in all the world—thus differing from other officers in the church in the duties of their calling; and they form a quorum equal in authority to that of the twelve especial witnesses, or apostles, just named. And every decision made by either of these quorums must be by the unanimous voice of the same; that is, every member in each quorum must be agreed to its decisions, in order to make their decisions of the same power or validity one with the other."

And on the same subject, section 5 paragraph 6 this same exhibit E reads as follows: "The president of the church, who is also the president of the council, is appointed by revelation, and acknowledged, in his administration, by the voice of the church; and it is
61 according to the dignity of his office, that he should preside over the council of the church; and it is his privilege to be assisted by two other presidents, appointed after the same manner that he himself was appointed; and in case of the absence of one or both of those who are appointed to assist him, he has power to preside over the council without an assistant; and in case that he himself is absent, the other presidents have power to preside in his stead, both or either of them."

Paragraph 2 section 14 of exhibit E on the same subject reads as follows: "But verily, verily, I say unto you, that none else shall be appointed unto this gift, except it be through him, for if it be taken from him he shall not have power, except to appoint another in his stead; and this shall be a law unto you, that ye receive not the teachings of any that shall come before you as revelations or commandments; and this I give unto you that you may not be deceived, that you may know they are not of me. For verily I say unto you, that he that is ordained of me shall come in at the gate and be ordained as I have told you before, to teach those revelations which you have received, and shall receive through him whom I have appointed." The paragraphs and sections that I have referred to in exhibit E are the same in the publication of the same book, published by the Reorganized Church, as they were in the 1835 edition. The reading matter is the same, but the sections have been differently arranged—most of them have. The sections are placed in different order, but there is no change in text. The sections and

paragraphs also are given, so that one can find any reference in one book by comparing it with the other.

The book handed me marked exhibit N is the Church Record belonging to the Reorganized Church, and containing the minutes of some of the first conferences held, and also the record of the different branches of the church. The record of membership, etc., conference minutes, etc. That is the official record of the church so far as it has been held.

This record exhibit N, with reference to the belief of the Reorganized Church on certain questions, reads as follows:—

62 Resolution 5: "Resolved that we believe that the Church of Christ organized on the 6th day of April A. D. 1830, exists as on that day, wherever six or more saints are organized according to the pattern in the book of Doctrine and Covenants."

Resolution 6: "Resolved that the whole law of the Church of Jesus Christ is contained in the Bible, Book of Mormon, the Book of Doctrine and Covenants," etc.

Resolution 9: "Resolved that this conference believes it the duty of the elders of this church who have been legally ordained, to cry repentance and remission of sins to this generation through obedience to the gospel as revealed in the record of the Jews, Book of Mormon, and Book of Doctrine and Covenants, and to not faint in the discharge of duty."

Those are the resolutions passed at the General Conference about
63 which I have been interrogated, and the book referred to therein as the record of the Jews is the Bible, the Old and the New Testaments.

I was present at the General Conference held in September, 1878. I do not know that I can remember specifically what was done. I do not know that I can remember anything in reference to this record. I know there was something done in reference to the records of the church, and the standard books, but my recollection is that it was in the way of reaffirming something that had been done prior to that time; but I would not like to say from memory what was done. I was present and knew at the time the action taken, what was being done, but just the things that were done I could not tell from recollection.

After having refreshed my recollection by referring to exhibit M offered and introduced in this case, I am compelled to state now what was done. I presided at that meeting, and put the resolution when it was presented. The resolution was presented for recognizing the standard books of the church, the Scriptures, Book of Mormon, and Book of Doctrine and Covenants. The books referred to in the action of that General Conference in 1878 were the same in text as the Book of Mormon, which is marked exhibit D in this case; and the Book of Doctrine and Covenants which is marked exhibit E, and exhibit J being the 1880 edition of the book of Doctrine and Covenants.

The paper now handed me and marked exhibit B is the Articles of

Incorporation of the Reorganized Church of Jesus Christ of Latter Day Saints, of date June 6, 1891, and I was one of the Incorporarators; my name is signed to these articles.

These are the Articles of Incorporation of the church from whose
64 records I have been citing passages during the taking of my deposition. The church government expressed in these Articles of Incorporation, is the church government of the church of which I am the president. The articles of church government set out in the Articles of Incorporation above referred to are the same as the articles of church government set out in the standard works of the church under exhibits D, J, and E.

And the order of church government as set out in the Articles of Incorporation of the Reorganized Church, dated June 6, 1891, is the same order of church government as that set out in King James' translation of the Bible, which was introduced in this case, marked exhibit C.

I do not know of any difference between the two, if there is any, it has escaped my attention.

I am familiar with the practice and usages of the church with reference to the acceptance of revelations by the church. On that subject the usages and practice is, both in the original church of 1830 to 1844, and also in the Reorganized Church, that whatever purports to be revelation is referred to the church for action to be taken on it by the church before it can be binding upon the body.

It must be examined by the leading quorums of the church, and be accepted by them before it can be presented to the body. If accepted by these quorums, then it is presented to the body for its
65 action, and upon their acceptance becomes binding upon the church. By the term *quorum*, I mean certain organizations of the ministry, such for instance as the First Presidency, or the Quorum of Twelve. The first president of the church and his council form the first quorum, which consists of three members when full. The next quorum is that of the Twelve, and is known as the twelve apostles, and when full contains twelve persons. The next quorum is known as the Seventy, and it may consist of seven quorums of seventy each, when full.

Now the matter of revelation is submitted to each of these quorums separately, to be examined by them separately, and when the have decided, it is either accepted or rejected. They can of course examine the matter separately or conjointly, and after they have passed on it, it is presented to the body and acted upon by the body of the church. If accepted by the body, it then becomes a law of the church and binding upon the members.

Exhibit O now handed me is the *Times and Seasons*, published by the church at Nauvoo, Illinois. This is the official publication of the church, from page 423 of exhibit O, under date of Thursday, February 1, 1844, is the following, which I now read in answer to the question asked me:—

"NOTICE.

"As we have lately been credibly informed that an elder of the Church of Christ of Latter Day Saints, by the name of Hiram Brown, has been preaching polygamy, and other false and corrupt doctrines, in the county of Lapeer, State of Michigan, this is to notify him, and the church in general, that he has been cut off from the church for his iniquity; and he is further notified to appear at the Special Conference on the 6th of April next, to make answer to these charges.

"JOSEPH SMITH,
"HYRUM SMITH,
"Presidents of said Church."

I was a member of the original church at the time the notice I have just read to the reporter was issued, and the book from which I have read, being the *Times and Seasons*, exhibit O was held out by the
66 original church, as a church paper, and authorized by the church, up to 1844, and it has been recognized since then by the Reorganized Church as the official publication of the original church. It was understood to be so by me until the death of Joseph Smith and Hyrum Smith in 1844, and has been so regarded by the Reorganized Church, and by everybody else that has ever had anything to do with the church. Now that is my understanding of it. The book exhibit O has always been regarded as an original and authorized publication of the church up to the time of the death of Joseph and Hyrum Smith, and has been so treated so far as I am aware. Between the elders of the Reorganized Church and those of other factions or churches, between myself and other factions of the same church and other churches, in all public and private discussions, it was always regarded as the current, official, and authorized publication of the church up to 1844.

67 The attitude of the original church from 1830 to 1844, (June 27,) towards the government of the United States is shown from the authorized books of the church as follows: Exhibit E, page 137:—

"Let no man think that he is ruler, but let God rule him that judgeth, according to the counsel of his own will: or in other words, him that counseleth, or sitteth upon the judgment seat. Let no man break the laws of the land, for he that keepeth the laws of God, hath no need to break the laws of the land: wherefore, be subject to the powers that be, until He reigns whose right it is to reign, and subdues all enemies under his feet. Behold the laws which ye have received from my hand, are the laws of the church; and in this light shall ye hold them forth. Behold, here is wisdom."

Paragraphs 21, 22, and 23, of section 13, the same book, with reference to the same subject, are as follows:—

Paragraph 21: "And again, every person who belongeth to this Church of Christ, shall observe to keep all the commandments and covenants of the church. And it shall come to pass that if any person among you shall kill, they shall be delivered up and dealt with

according to the laws of the land; for remember that he hath no forgiveness; and it shall be proven according to the laws of the land."

Paragraph 22: "And if any man or woman shall commit adultery, he or she shall be tried before two elders of the church or more, and every word shall be established against him or her by two witnesses of the church, and not of the enemy, but if there are more than two witnesses it is better; but he or she shall be condemned by the mouth of two witnesses, and the elders shall lay the case before the church, and the church shall lift up their hands against him or her, that they may be dealt with according to the law of God. And if it can be, it is necessary that the bishop is present also. And thus ye shall do in all cases which shall come before you. And if a man or woman shall rob, he or she shall be delivered up to the law of the land. And if he or she shall steal, he or she shall be delivered up unto the law of the land. And if he or she shall lie, he or she shall be delivered up unto the law of the land. If he or she shall do any manner of iniquity, he or she shall be delivered up unto the law, even that of God."

Paragraph 23. "And if thy brother or sister offend thee, thou shalt take him or her between him or her and thee alone; and if he or she con fess, thou shalt be reconciled. And if he or she confess
68 not, thou shalt deliver him or her up unto the church, not the members, but to the elders. And it shall be done in a meeting, and that not before the world. And if thy brother or sister offend many, he or she shall be chastened before many. And if any one offend openly, he or she shall be rebuked openly, that he or she may be ashamed. And if he or she confess not, he or she shall be delivered up unto the law of God. If anyone shall offend in secret, he or she shall be rebuked in secret, that he or she may have opportunity to confess in secret to him or her whom he or she has offended, and to God, that the church may not speak reproachfully of him or her. And thus shall ye conduct all things."

That is not all that exhibit E contains with reference to this subject. There is a declaration of the attitude of the church in regard to government. It is section 102 of this book, exhibit E, pages 252, 253, and 254, as follows:—

"OF GOVERMENT AND LAWS IN GENERAL.

"1. We believe that governments were instituted of God for the benefit of man, and that he holds men accountable for their acts in relation to them, either in making laws or administering them, for the good and safety of society.

"2. We believe that no government can exist in peace, except such laws are framed and held inviolate as will secure to each individual the free exercise of conscience, the right and control of property and the protection of life.

"3. We believe that all governments necessarily require civil officers and magistrates to enforce the laws of the same, and that such

as will administer the law in equity and justice should be sought for and upheld by the voice of the people, (if a Republic,) or the will of the Sovereign.

"4. We believe that religion is instituted of God, and that men are amenable to Him and to Him only for the exercise of it, unless their religious opinions prompt them to infringe upon the rights and liberties of others; but we do not believe that human law has a right to interfere in prescribing rules of worship to bind the consciences of men, nor dictate forms for public or private devotion; that the civil magistrate should restrain crime but never control conscience; should punish guilt but never suppress the freedom of the soul.

"5. We believe that all men are bound to sustain and uphold the respective governments in which they reside, while protected in their inherent and inalienable rights by the laws of such governments, and that sedition and rebellion are unbecoming every citizen thus protected, and should be punished accordingly; and that all governments have a right to enact such laws as in their own judgments are best calculated to secure the public interest, at the same time however, holding sacred the freedom of conscience.

"6. We believe that every man should be honored in his station, rulers and magistrates as such—being placed for the protection of the innocent and the punishment of the guilty; and that to the laws all men owe respect and deference, as without them peace and harmony would be supplanted by anarchy and terror; human laws being instituted for the express purpose of regulating our interests as individuals and nations, between man and man, and divine laws, given of heaven, prescribing rules or spiritual concerns, for faith and worship, both to be answered by man to his Maker.

"7. We believe that Rulers, States, and Governments have a right, and are bound to enact laws for the protection of all citizens in the free exercise of their religious belief; but we do not believe that they have a right, in justice, to deprive citizens of this privilege, or proscribe them in their opinions, so long as a regard and reverence is shown to the laws, and such religious opinions do not justify sedition or conspiracy.

"8. We believe that the commission of crime should be punished according to the nature of the offence; that murder, treason, robbery, theft, and the breach of the general peace, in all respects, should be punished according to their criminality and their tendency to evil among men, by the laws of that government in which the offence is committed; and for the public peace and tranquility all men should step forward and use their ability in bringing offenders against good laws to punishment.

69

"9. We do not believe it just to mingle religious influence with civil government, whereby one religious society is fostered and another proscribed in its spiritual privileges, and the individual rights of its members, as citizens, denied.

"10. We believe that all religious societies have a right to deal

with their members for disorderly conduct according to the rules and regulations of such societies, provided that such dealing be for fellowship and good standing; but we do not believe that any religious society has authority to try men on the right of property or life, to take from them this world's goods, or put them in jeopardy either life or limb, neither to inflict any physical punishment upon them,—they can only excommunicate them from their society and withdraw from their fellowship.

"11. We believe that men should appeal to the civil law for the redress of all wrongs and grievances, where personal abuse is inflicted, or the right of property or character infringed, where such laws exist as will protect the same; but we believe that all men are justified in defending themselves, their friends, and property, and the government, from the unlawful assaults and encroachments of all persons, in times of exigencies, where immediate appeal cannot be made to the laws, and relief afforded.

"12. We believe it just to preach the gospel to the nations of the earth, and warn the righteous to save themselves from the corruption of the world; but we do not believe it right to interfere with bond servants, neither preach the gospel to, nor baptize them, contrary to the will and wish of their masters, nor to meddle with or influence them in the least to cause them to be dissatisfied with their situations in this life, thereby jeopardizing the lives of men: such interference we believe to be unlawful and unjust, and dangerous to the peace of every government allowing human beings to be held in servitude."

CROSS-EXAMINATION.

70 I have testified in answer to the interrogatories with reference to the number of publications filed as exhibits in this case, and among others have stated that the Book of Mormon is an authority in the church to which I belong. That is a fact, and I have so stated it; and I have also stated that it was authority in the church before I left Nauvoo, Illinois.

The Reorganized Church uses the same edition of the Book of Mormon that the Nauvoo church did; the Palmyra edition published in 1830, and the Liverpool edition, one published by Mr. Huntley,—I do not remember the date of the edition,—and also one published by ourselves. We regard these editions as authority. The one published by ourselves was in 1863 or 1864, and the edition was issued either in Chicago or Cincinnati. We understand the subject matter in these editions to be the same.

My knowledge is that they are not identical in words; that is, they are not all identical as far as words go. There was an edition gotten up in Nauvoo, at one time, and that edition is not exactly the same in words as the Palmyra edition, but the substance and teaching is the same. We regard all the editions alike. We use this one, meaning the book in my hand, because it is versified and is more easily handled on that account; but we have all of them, and they are of

equal authority with us, for there has been no specific change in any of them; that is, in any of the Books of Mormon, published by anyone that I know anything about.

I have also testified that the book called the Book of Doctrine and Covenants is an authority in the Reorganized Church, and that the same book was an authority in the original church prior to 1844. There are different editions of that book; all the edition that I have seen that was used in the church prior to 1844, is the edition of 1835. The 1835 edition was published at Kirtland, Ohio; then there was an edition of 1845, and 1846, published at Nauvoo,
71 Illinois. There were editions published in 1852, and in 1854 in Europe. One was published by Albert Carrington in 1869. All these editions, 1835, 1845, 1846, 1852, 1854, and 1869, are the same in substance so far as I have had an opportunity to examine them. Some of them I have examined thoroughly, and some I have not examined so thoroughly; but to the best of my judgment they are practically the same.

There are what purports to be revelations in some of the later editions of the book of Doctrine and Covenants that are not in some of the prior editions; but in so far as they have been published contemporaneously or purport to give the teachings of the church as it existed in the time prior to the death of my father and Hyrum Smith, and which were authorized by the church to which we belong, or by the body of the church, and were published in book form, they are identically the same.

Yes sir, I say that some of the later editions of the Doctrine and Covenants have subject matter in them that former editions do not have, and in that regard they are not identically the same. I do not know that I can tell what editions of this book contain matter not in the first edition published in 1835, and the editions published subsequent thereto in 1845 and 1846. I think, however, there was a revelation said to be given sometime in 1834 that is not in the later editions. And in the edition published by us we have added what has been given us in the way of direction and commandment, or what has been recognized by the church since 1844.

There is not much of the book composed of that matter, a few pages, possibly twenty-four pages in all. These new revelations are in the book which has been presented in this case, and marked Exhibit J, and are regarded as authoritative by the Reorganized Church.

The edition marked Exhibit J was published in 1882. In 1878,
72 there was an authoritative declaration made by the church authorizing the Board of Publication to insert these later revelations in the Book of Doctrine and Covenants, and ordering the publication. The church was reorganized in 1852, and from 1852 to 1878 used the 1835, 1845, and 1846, editions of the Book of Doctrine and Covenants. They contained all of the revelations that had been authoritatively received by the church up to that time. The revelations given after the pub-

lication of 1845, regarded as authoritative by the Reorganized Church, were given in 1861, 1863, 1865, 1873, 1882, and 1887.

At first these were not comprised in the Book of Doctrine and Covenants, and were not published until they were accepted and authorized by the church. All that had been received up to 1878 were ordered printed in the book.

Now these revelations given from 1861 to 1882, after they were accepted by the church, became a rule to the church, and are authoritative and binding upon the church, as much so as any given prior to June 27, 1844. They were accepted as authority by the church, at least some of them prior to the time of their publication, and were accepted at the time of the revelation, or about that time. In the Book of Doctrine and Covenants that is now the rule of action
73 in the Reorganized Church and binding upon the church, there are certain rules and doctrines that are not found in the original book of Doctrine and Covenants published in 1835, 1845, and 1846, which references have been made in my examination, nor are they found in any book published before 1835 and 1836, that I know anything about. The part to be found in the Book of Doctrine and Covenants now used and held as authority in the Reorganized Church that is not found in the editions of 1835, 1845, and 1846, is simply revelations given in 1861, and thereafter; they have been adopted by the church, but all other matters contained in these books are substantially the same.

The methods which were used in their adoption by the Reorganized Church required that they should be presented to the quorums, and acted upon by them; they are then presented to the body, and accepted by the body in conference. The body in conference is the membership assembled in conference. It is the official membership recognized as *ex officio* conference members and delegates appointed by the different branches and districts of the churches forming the conferences.

The official membership of the conference is composed of the president of the church, the twelve, the high priests, the seventy, and the elders; these are *ex officio* members of the conference; they attend and vote each for himself. They may be *ex officio* delegates or not, or they may be lay delegates, or I should say lay members, and cast the vote of their district. Delegates are selected by the branches and by the members of the districts at the district conferences. Branches are church organizations, or congregations they may be called, I suppose. The districts are officially designated territories, composed of two or more branches contiguous to each other. Branches are presided over by officers chosen by the branch in case there is an organization, districts by the person appointed by the conference temporally; but usually one who may be selected by the members of the district and called the district president.

Each isolated branch is entitled to one representative, if there is only a few members in it; if the number of members is over twenty-

five, it is entitled to two members in conference. Districts are represented in conference by delegates chosen at their district
74 conferences. Branches and districts are the only organizations below the conference. The churches exist in the branches and districts, where they are organized; but branches may exist without a district organization.

The next higher government in the order of the church above the district, is the General Conference. It represents the whole body of the church everywhere. It means the church wherever it may exist, without reference to the location, or what country it may be in. The General Conference represents the Church everywhere it exists, whether at home or abroad.

The quorum to do business in the conference, is the membership present, *ex officio's*, and delegates. There has never been any designated number required to form a quorum. Proceedings of Annual Conferences are kept by secretaries; that is, they are kept through a permanent secretary of the church being present, with his assistants, and keeping a record of the proceedings of the conference. If he is not present the proceedings are kept by a person selected temporarily to perform that duty, and reported to the secretary. The proceedings of the conferences are usually published to the church through the medium of the official publication or organ of the church, but the written record itself is kept by the Secretary and Recorder of the church in his office.

I believe the proceedings of the conferences are uniformly published. At least they have been regularly published since my connection with the church in 1860. I do not know that the minutes of the conference held by the Reorganized Church were published prior
75 to 1860, for the reason that the Reorganized Church had no official organ prior to 1860. I cannot say anything about the minutes of the conferences of the church from 1832 to 1844, only as I see them represented in the published records or journals of the day.

I have never seen the records of the conferences held from 1832, to 1845, only as I have seen them published in the journals of the day, the *Times and Seasons* and the *Millennial Star*. The *Millennial Star* was published at Liverpool, England. I said that I had never seen any of the original official publications of the conference minutes of the church from 1830 down to 1845, unless it has been in the current journals of the time. I have never seen the written originals. I do not know whether the proceedings of the conferences I have seen in the publications before referred to are authentic or not, but I have no doubt but that they are authentic. I do not know it from my own knowledge.

I do not know what became of these records of the church prior to 1844. We have in our possession one of the minute books of the church, the record of the First Quorum of Elders. There was a record kept by a Mr. Norton, who died up in Michigan, and who sent it to us.

I cannot say whether there is any sect or faction of the church which claims to have these records from 1830 to 1845-6; I do not know anything about that.

I believe there is a sect that claims to be the true church and claims to practice the doctrine and faith, governed by the same rules as the Church of Jesus Christ of Latter Day Saints from 1830 to
76 1844. That sect or church has existed all the time from 1845 to the present time. I do not know whether that church has these records before referred to or not. I have never seen them, know nothing about them.

The minutes of the last General Conference of the Reorganized Church of Latter Day Saints is authoritative as published. Minutes of a conference are usually ordered to be published, and this last spring they were ordered published in pamphlet form as supplement to the *Saints' Herald*, and were so published. There are no other official publications of the Reorganized Church aside from the proceedings of the General Conferences, unless it be the current journal of the church. There are no others unless the *Saints' Herald* was authorized to be published. It was selected by the Board of Publication maintained by the church, and from time to time the official proceedings of the church are published in it, by vote of the conference; I mean the General Conference of the church. That prior to 1844 was held twice a year, and such are now held once each successive year. This publication was authorized at every conference from 1859. I think that it was first published by Isaac Sheen, at Cincinnati, Ohio. It is now published under the charge and control of a Board of Publication, appointed by the church at each annual meeting; that is they either retain the old Board of Publication or select, as the case may be, a new Board; this Board retains a certain number of per-
77 sons to edit and manage it, then in addition there is a mechanical department that sets the type, and men that make the copy and read the proofs, and persons who mail it after it is printed. Only the Board of Publication is selected by the conference, and they appoint all the other employees. The paper has two editors appointed by the Board of Publication.

That part of the paper or publication which bears the official signature is authentic; that is, the authorities who represent themselves. For instance, the Bishopric when it sends out anything over its signature, that would be authentic as coming from them; and if the Twelve would do the same thing, it would be authentic as coming from them; or if the elders would do it, it would be coming from them; and the writers of communications are responsible for their own communications.

Everything that appears in that way in the church publication is authentic as coming from the source it purports to come from, but it is not binding upon the church until it has been accepted by the church.

I have not offered anything in the church publication as testimony in this case. The *Herald* has not been offered as testimony in this case, to my knowledge.

I know the paper called the *Times and Seasons*, that was the journal published in Nauvoo, from 1839, to 1844; I think it was published in pamphlet form and issued to subscribers. I do not know that I can describe it specifically. It partook of the character of a church publication at the time it was published, and it was undoubtedly an official organ of the church. The church organized in 1830, and existed at that time. It was never an official organ of the Reorganized Church of Jesus Christ of Latter Day Saints, was not used by them, but was accepted by them from 1839 to 1844, that is, for what it purports to be.

I have had frequent opportunities of observing these volumes of the *Times and Seasons* identified in this case, and part of them are from my library; they are not complete, part of them are missing. The first three volumes are complete, I do not know that there is anything missing from them. The last three I have not examined
78 and do not know whether they are complete or not; if there is anything incomplete, it is leaves that have dropped out by wear and time, or which have been accidentally torn out. All the volumes of the *Times and Seasons* placed as exhibits in this case are of date between 1840 and 1844, I think these are the dates, but the whole number ran to 1846. I have not identified any of the volumes after 1844, I have in my possession the volumes after 1844, but not here. All that were brought here, Mr. Kelley has.

So far as the old church is concerned, we regard all of them as official until the death of Joseph Smith, in 1844, June 27; after that they were published by other parties, and we do not regard them as of any weight with us after that date.

They were published after June 27, 1844, by those who continued there at Nauvoo, under the parties who took charge of the church after the death of Joseph Smith; they were Brigham Young and others.

The publication of the *Times and Seasons* was begun under Joseph Smith's presidency of the church, and continued until he was killed, and the publication was continued some years afterwards by the parties who claim to succeed him. I do not know that his presidency had anything to do with the publication of the newspaper, but part of the time he was editor of the paper. I mean to say that he was editor only part of the time while he was living; when he was not editor, Ebenezer Robinson and Don Carlos Smith run the paper, and John Taylor a part of the time. They were not all on the paper at
79 one time. John Taylor conducted the paper after the death of Joseph Smith; he was editor at the time Joseph Smith was killed, and I think remained editor until the suspension of the paper. It was suspended some time in 1846. I believe John Taylor was editor of the paper before my father's death, a part of the time. He is the

same John Taylor who after my father's death went to Salt Lake; he went with the church to Salt Lake at the time that Brigham Young went, as I understand it; that is what I am informed is the fact, but do not know that it is a fact, for I was not with them at the time. My information is that he went to Salt Lake with them at the time Brigham Young went and was president of the church in Utah, after the death of Brigham Young; I mean president of the Utah church after Brigham Young.

The *Times and Seasons* at the beginning of its career, was an individual concern published by Ebenezer Robinson, and Carlos Smith in partnership. It is not a fact that the paper was never published by the church; the paper was purchased by the church and published by it, that is after Robinson and Smith ceased publishing it; it was purchased by the church and published in the interest of the church. I do not remember the date it was purchased. After it was purchased from Robinson and Smith it was considered as an authority in the church, and was so considered as an authority up to the time of the death of Joseph Smith, June 27, 1844; and I presume that by those who published it, it was considered an authority after June 27, 1844; but was never so regarded by the Reorganized Church; the members of the church who were members of
80 the church before my father's death, and who did not take affiliation with the incoming authority, or the authority under Brigham Young.

There was a history of Joseph Smith written for the public, and published. The publication was begun in the *Times and Seasons*, and I am not sure but what it was in the paper published here, Independence, Missouri. I am not certain about the date, it must have been about 1833. It began to be published again in the *Times and Seasons*, very nearly at the start of that paper; I do not recollect the date. The publication was continued after the death of my father. It purported to be the life of Joseph Smith, as written by himself; that part of it which appeared after his death June 27, 1844, is not accepted by the Reorganized Church of Jesus Christ of Latter Day Saints as correct.

Exhibit M, now handed me, is an authorized publication; it was published by the Board of Publication of the Reorganized Church. Exhibit M has never been passed on by the General Conference; not as a pamphlet it has not. The document marked Exhibit M, was printed this winter, probably in the month of December, 1891. It was published by the Board of Publication, and so shows on its face; I
81 mean the Board of Publication of the Reorganized Church of Jesus Christ of Latter Day Saints, at Lamoni, Decatur county, Iowa. All these facts are stated on the first page.

It is a fact that what the Board of Publication does as the agent of the church is the work of the church, until it is questioned and proved otherwise. By being printed by that Board, it is not authority the same as if it had been indorsed by the church in its con-

ferences, for the reason that it is yet subject to the church in conference, there to be approved or disapproved upon its merits by that body.

Exhibit M was printed and published after the institution of this suit. It was not published with a view of being used in the taking of these depositions. No sir, it was not. It was published as a pamphlet for our men in the field, for the information of the men in the field, giving as it does a statement of the position of the church in succession.

Now that it might be used in this suit was of course presumed, but at that time I knew nothing of the taking of these depositions; it was not compiled for use in this suit. That was not the object of its compilation. The Board of Publication is composed of Bishop E. L. Kelley, David Dancer, W. W. Blair, James H. Peters, and Robert Winning. I assisted in compiling exhibit M, and helped to read the proofs.

It is not a fact that anything that is printed and published by the Board of Publication is an authentic publication of the Reorganized Church of Jesus Christ of Latter Day Saints. We print a good many things that are the authentic declarations of other men, and we pub-
82 lish them as such, for what they are, or purport to be; but it does not follow from that, that they are the declarations of the church, or binding upon the church. We just publish these things for what they purport to be, and nothing else. The matter that is found in exhibit M quoted, we obtained from the published and authorized works of the church, and other published documents. Not all of exhibit M is original matter; some portions of it are original. The parts that are used by the writers to connect it together are original with the writers. The writers were W. W. Blair, E. L. Kelley, and Joseph Smith. At the time we were compiling this pamphlet, the expectation was that it might be used in this examination. It is not a fact that at the time of the compilation of this pamphlet we were fixing up testimony for this case. No sir, that is not true. I think I have answered the question; if I have not, I do not think it is possible for me to answer it. To answer the question again I will say, It is not a fact that at the time we were compiling this pamphlet, we were fixing up testimony to use at the trial of this case, or at this examination; nor is it true that we were fixing up a mass of facts to be used as testimony in this case.

I said yesterday that in order for revelations to become authentic and binding upon the church as authoritative, they must first pass through the quorums of the church, and be accepted by the body of the church. These quotations on pages 16 and 17 of exhibit M have been adopted by the church; they have not been passed through and examined by these quorums of the church; I did not so state; nor did I state that things of that kind were required to pass through that ordeal. A declaration of doctrine and faith must necessarily
83 pass through such an ordeal, but they are presented to the church

and accepted by the church before they are received as authoritative. They were presented to the Reorganized Church for adoption (I do not know the exact date from memory) at Plano, Kendall county, Illinois, and since the year 1860, when I became connected with the church. It was prior to 1878.

I did not say pages 16 and 17, introduced here from exhibit M, were presented to the church in the regular way, and indorsed in such a way as to render them binding upon the church. No sir, I did not say that; but I did say that the subject matter upon the sixteenth and seventeenth pages of exhibit M was presented, and indorsed by the church, but not the pages themselves; the pages themselves were only compiled this winter, or rather this pamphlet was only compiled this winter.

I mean by the subject matter on these pages the Epitome of Faith there presented, and I mean that every statement in this Epitome of Faith has been presented to and passed upon by the church, and approved by the church; but I am unable to state the date that it was done, without examining the record. I helped compile that Epitome of
84 Faith myself, and was present when it was presented and was with the body when it was adopted as the Epitome of Faith. We did not include in this Epitome of Faith what is on page 17 of exhibit M under the head of "church record." We did not for the reason that it is not a part of the Epitome. I believe what is stated there, however, is authoritative; and it is taken from the church records presented in this case yesterday. The minutes of the conference, and it is authentic, for what is taken from the church records is authentic, and the whole of it is taken from the church records.

The resolution shown on the minutes of the conference is as follows: "Resolved that the whole law of the Church of Jesus Christ is contained in the Bible, Book of Mormon, and the Book of Doctrine and Covenants." It was considered at the time it was adopted by the conference, true, that was in June, 1852.

It is not a fact that this is as true at the present time as it was then, simply because there have been additions to the church rules since that time. Yes sir, I state as a positive fact that there have been additions to the rules of the church since 1852; additions authorized by the church at its General Conferences, and by its various quorums.

I did not say, and have not said, that all revelations to be authentic and of binding force upon the church must be presented to the quorums, and be approved by them; I said that before a revelation, or what purports to be a revelation, could be accepted as binding upon the church, it must be submitted to that ordeal. It cannot become a law and be binding as law until it is submitted to the quorums and indorsed by them, and approved by the body; but it may be accepted by the members and acted upon subject to inquiry and examination. The acceptance of revelations by the quorums and the church makes it binding upon the church, but it may be a revelation

without such acceptance and indorsement, but before it can be binding upon the church as a church, it must be acted upon and accepted. That was the doctrine of the church prior to the death of Joseph Smith, in 1844.

I could not say there were any revelations given and published by my father, that he submitted to the quorums, from personal knowl-
85 edge. I do not know whether the revelation spoken of by Mr. Whitehead in his testimony, by which I was selected by my father as his successor was submitted to the quorums; I do not know that it was, and I do not know that it was not. I do not claim that it was, and so far as I am concerned, I do not make the statement that there was any such a revelation given. So far as I am concerned I did not, and have not made any such a statement. My statement is, that I do not know anything whatever about it. I do not know whether the revelation was given or not. I cannot say that if such a revelation had been given and had not been submitted to the quorums, that it would or would not be valid. I could have been properly ordained under the laws of the Reorganized Church to the office I now hold, without a revelation to that effect from my father. Yes sir, you understand me correctly; I claim that I could properly be ordained and qualified and put in the possession of the office which I now hold, without a revelation to that effect to my father. I make that claim.

If my father received such a revelation, I cannot say whether I was ordained under it or not. I would not like to say that, for I have already said I did not know there was such a revelation. I understand that the ordination was legally done according to the rules of the church, and that was all that was necessary. Yes sir, I stated that I was ordained at Amboy.

I cannot say that my ordination was made without reference to the alleged revelation to my father. My ordination was made upon the authority of the understanding of the law, as they had it, and from the fact that they regarded it as a fact that there had been such a revelation, but personally I know nothing whatever about it.

Personally I do not know whether there was or was not such a revelation. I know that there was such an appointment of myself as my father's successor in office, but I do not know whether it was by virtue of a revelation or not. As a rule, before a president or high
86 priest can be ordained there must be some kind of a manifestation in regard to it individually, before he can be ordained to any office in the Melchisedek priesthood. There is no law of the church that such a revelation or manifestation before it can be enforced must be accepted by the quorum. It requires an acceptance by the body; I should say, acted upon and accepted by the body before which it comes, either a branch, district conference, or General Conference. It is owing to the nature of the revelation. For instance; a man may be called and ordained in the body or branch. In a congregational organization he may rise and speak what he considers is the voice of the Spirit, and be ordained by reason of this manifestation,

without the matter being submitted to the different quorums; but if it is a matter to be presented to the body, and to become a rule of action for the general body it must be presented in that way; but in rising in a local congregation it must be acted on immediately by the voice of the people there assembled.

I do not know that I can just turn to the law of the church to that effect. There are precedents in the Book of Mormon for it. You are asking for a special law of the church to that effect; I have stated that I do not know where I can find it, or whether I can find it. It is in the Book of Doctrine and Covenants that has been identified here. That is, the principle is undoubtedly there. Yes, sir, the principle is in the authorized publications of the church prior to 1852, but I do not know that I can give you the exact location of it. What you read to me in your question, to wit: "There is a way by which all revelations purporting to be from God to any man can be tested," down to the words, "Brother Joseph said, 'let no revelation go to the people until it has been tested,'" that in itself is not a law of the church; it is a statement of one Orson Hyde with reference to what was the rule of the church; I say that is not the law of the church, as it is contained there. That is a statement of Orson Hyde, as to what was the rule, and he belonged to the Utah Church. I believe the statement to be a correct one.

87 The *Millennial Star* was a publication published in England. I do not know whether it is being published now or not.

Yes, sir, it is stated in our Epitome of Faith that, "We believe in the same kind of organization that existed in the primitive church," apostles, prophets, pastors, teachers, evangelists, etc., and is a statement of the belief of the Reorganized Church.

The book marked exhibit N came from Lamoni, Iowa. It was brought to Lamoni, from Plano, Kendall county, Illinois, by the Secretary of the Church. Henry A. Stebbins is and was at the time the secretary. That book, exhibit N, purports to contain the records of the church from June, 1852, down to sometime in the seventies; I do not know exactly what the year is. It contains the records of the conferences held between these dates, I think; I know it does some of them, but do not know positively that it contains all of them. I cannot say that it contains records of other meetings besides conference meetings. Henry A. Stebbins was not in charge of it all the time; Isaac Sheen had charge of it before Mr. Stebbins. No other person was in charge of it during that time to my knowledge. I said Henry Stebbins brought it from Plano, but really I do not know, for I did not see him bring it; but he was Secretary of the Church, and had charge of the books. I have seen the book in his possession at Lamoni, and at Plano, and this is the same book that I saw in his possession at those places. When the book is at Lamoni, it is in the custody of the Secretary of the Church, and in his office—the office of Henry A. Stebbins; he is the Secretary of the Reorganized Church.

88 I brought the book here myself at the request of Bishop Kelley; the

package of books was made up at his request, and I brought it with me.

I recognize the resolution you read, "Resolved that we believe that the Church of Jesus Christ, organized on the 6th day of April, 1830, exists as on that day, wherever six or more Saints are organized according to the pattern in the Book of Doctrine and Covenants," as having been introduced in testimony yesterday from this book. The name of the church referred to in this resolution is the Church of Jesus Christ. Of course I am not sure of that, because I was not there at the time; I know only by the general appellation that was given it.

It has been called the "Church of Christ," the "Church of Jesus Christ," and the "Church of Jesus Christ of Latter Day Saints."

From my own knowledge I cannot tell what was the real and technical name of the church from its organization in 1830 down to 1844. The historical appellation accepted by the Reorganized Church of Jesus Christ of Latter Day Saints is, The Church of Jesus Christ, and the words "of Latter Day Saints" is added, descriptive.

I do not know of my own knowledge that the word *Jesus* was in the name of the church in 1830; all I know about it I get from my reading of the books of the church, and the records.

I have in my hand the Book of Doctrine and Covenants, first edition, exhibit E. I could not read the title page for the reason that there is none. It has been lost, apparently. I would like to read it for you if I could. The headlines on page five of exhibit E, which you ask me to read, are,—

"THEOLOGY. LECTURE FIRST ON THE DOCTRINE OF THE CHURCH OF THE LATTER DAY SAINTS. OF FAITH."

The words "of Jesus Christ" are not there; they do not appear in
89 that headline. I am safe in saying I am reasonably acquainted with the book marked exhibit E; I have read it. I cannot say from memory whether I ever saw in the book exhibit E the words "Church of Jesus Christ."

The fifth resolution in this book, exhibit N, is in the record of the conference of June 12, 1852. I cannot say that because in section 2 of exhibit E the church is denominated the "Church of Christ," that it is not properly named in said section. I will say this, Colonel; that if it be the same body, it is immaterial as to what specific name be given it by writers writing about it or by documents in reference to it. It may be called the "Church of Christ," the "Church of Jesus Christ," the "Church of Christ Jesus," or the "Church of the Latter Day Saints," or the "Church of Jesus Christ of Latter Day Saints," or what the denominated title of the church was at the time; and whatever the title of the church has been since that time is immaterial.

I do not know what the title of the church was before I became connected with it, only from the information I gather about it by

reading and otherwise; but what the title of the church has been since my connection with it, I am prepared to testify about.

I cannot see that if at the time of the presidency of the church by
90 my father, it had been called the Methodist Church, and the church I now belong to, was called or designated as it is, that it would make any difference, if as a matter of fact the principles were the same; the name has very little to do with it, if the doctrine, rules, and practices are the same.

I am not prepared to say what might have been the distinctive title of it before my connection with it, except as I get it from history. I cannot say what the particular, specific name of the church was from 1830 to 1834. I can testify in a manner of course, but I am not prepared to testify from my own knowledge, for I do not know anything about it from personal knowledge or experience, but only as I get it from history. I have read the history to some extent. The history as I read it says that it was called the "Church of Latter Day Saints," the "Church of Christ," and it is referred to as the "Church of Jesus Christ," in the histories I have read referring to the matter of name. I do not know that it was given specifically in all these cases as the name, but the title of the church appears in all these forms. I am not sure that such was the case prior to 1834; I know it only as I get it from history. I have no personal knowledge of it. I am sure the history so states; that is my remembrance of having so read it. That is the only means of knowledge I have. Of course I was there at the time, but it was only as a child, and I do not recollect how that was; but that is my recollection of my reading upon the subject. As a child I could not remember, or be expected to remember what the distinctive title or name of the church was at that time, from actual, personal knowledge and observation.

I have read the Book of Mormon; there is a statement in it indicating that there was a dispute over the name of the church, what it should be. I think the question was not settled. I did not so understand it to be stated in the Book of Mormon to have been settled. I recognize what you read from the Book of Mormon, exhibit D, page 507, as authoritative teaching of the book so far as it is read. The part of exhibit B read by counsel to witness is as follows: "And they which were baptized were called the Church of Christ." "And it came to pass that as the disciples of Jesus were journeying, and were preaching the things which they had both heard and seen, and were baptizing in the name of Jesus, it came to pass that the disciples were gathered together, and were united in mighty prayer
91 and fasting. And Jesus again showed himself unto them, for they were praying unto the Father in his name; and Jesus came and stood in the midst of them, and saith unto them, What will ye that I shall give unto you? And they saith unto him, Lord we will that thou wouldst tell us the name whereby we shall call this church; for there are disputations among the people concerning this matter. And the

Lord said unto them, Verily, verily, I say unto you, Why is it that the people should murmur and dispute about this thing? Have they not read the Scriptures which say, Ye must take upon you the name of Christ, which is my name, for by this name ye shall be called at the last day; and whoso taketh upon him my name, and endureth to the end, the same shall be saved at the last day; therefore whatsoever ye shall do, ye shall do it in my name; therefore ye shall call the church in my name; and ye shall call upon the Father in my name that he will bless the church for my sake; and how be it my church save it be called in my name?"

But the same author of the history read, the same individual said, "My name is Jesus Christ," specifically; the same individual whose language you have read said, "My name is Jesus Christ," and in the Bible it is so recognized that that is his name. That is the name in which his disciples are to do everything they do, the name of Jesus Christ. And if you read the whole book through you will find that those quotations are only partial, for it is called the "Church of Christ," precisely the same way that it is called in this resolution.

I do not know of any church referred to in the Book of Mormon, that is called the Church of Latter Day Saints. I do not believe there is any church referred to in the Book of Mormon called the Church of Jesus Christ of Latter Day Saints, or the Reorganized Church of Jesus Christ of Latter Day Saints. I do not know of any by these names in the Book of Mormon.

92 I think the Church of Latter Day Saints and the Church of Christ is mentioned in the first edition of the Book of Covenants; I am not certain about the "Church of Jesus Christ of Latter Day Saints." I understand the name, "Church of Christ," is the name in which defendant is sued.

There is a book not put in testimony, or on exhibit; it is called the Book of Commandments. I do not know that that book holds any place in the laws of the church. The Reorganized Church does not indorse or hold the Book of Commandments as a book of authority in the church—not as a fragmentary book. Things that are in the book, as published in the Book of Covenants subsequently, from 1835, we recognize; but the matter that is in the Book of Commandments, so far as that matter is authorized, we recognize. We recognize the matter in the Book of Commandments, that has been passed upon and accepted by the church, as authoritative. Whatever in the Book of Commandments there is that has been acted upon by the church, we accept. We do not accept all the matter in the Book of Commandments as published. We do not recognize it as a complete book accepted by the church. The Book of Commandments was a fragmentary work, the publication of which was interrupted here in this very city, and the leaves scattered; and subsequently to that, a committee was appointed whose work it was to compile that book, but as the work was uncompleted and never accepted or passed upon

by the church, we never regarded it as an authentic publication. The Reorganized Church never did.

93 We recognize the Book of Doctrine and Covenants as authorized by the church in 1835, as the declared law of the church to govern it. I cannot tell you whether there was a revelation given through my father in 1838 giving the name of the church as the Church of Jesus Christ of Latter Day Saints. I do not know whether there was such a revelation or not. I do not remember of publishing an editorial in the *Herald*, in which I stated that to be a fact. I would recognize
94 the paper if I saw it. I recognize the paper handed me, it is a copy of the *Herald* published at Lamoni, Iowa. I recognize the article on the first page as the leading article, Questions and Answers. I recognize it as an article written by one of the editors. The editors are Joseph Smith and W. W. Blair. Joseph Smith, that is myself. I indorse that article as an editorial utterance of the editor who wrote it, simply indorse it as the utterance of the editor who wrote it. The statements and citations given there are stated to be from current and written history, but as to their correctness and truthfulness, I could not say. We considered the authority from which we quoted as being indicative of what the understanding at that time was, and as evidence concerning the name of the church.

We get authority for the addition to the name of the church, from the fact understood by us that it was a reorganization of the elements into a new organization of the elements of the church that had been scattered abroad. We get it from the logic of events, things that transpired, and the membership. They were gathered together in that way from different sections. We recognize in the Reorganized Church the rule of logic of events, when we are compelled to do so. No, sir, we do not recognize the logic of events of every character whatever, for the guidance of the Reorganized Church; there are facts of various descriptions and character, and they may be for us or against us.

The name that is given is a question to be determined hereafter,
95 whether it is for us or against us. That is a question I presume that will have to be determined hereafter, it appears to be the issue in this case.

We adopted the word *reorganized* as a kind of distinctive title from that of the church in the Utah Valley at Salt Lake, or Deseret. We did not get it by revelation, nor out of the Book of Mormon, nor the Book of Doctrine and Covenants, nor out of the *Times and Seasons*, nor the *Millennial Star;* we did not get it out of any of these, Colonel. We got it from the apparent necessities of the time, and our disposition in regard to it. I cannot give you the date when the church was first designated as the Reorganized Church; the name was formally and definitely adopted at our conference. I do not know that any title had been agreed upon in 1860, at the time I became connected with it.

From 1860 down to the present time I have been the president of the church, the position I hold is that of Presiding Elder.

96 Yes, sir, additional revelations were put in the Book of Doctrine and Covenants about the year 1879. I do not remember the number of pages that were added. It is not a fact that the additions were made to the Book of Covenants making the change of name very appropriate. It is not a fact that a change in name of a religious body would necessarily be appropriate by the addition of rules and regulations to govern the body, I did not say it in that way. It would be the same body after the additions to the rules were made. The additional laws to govern a body would make no difference.

Yes, sir, I maintain that if a church organization had a dozen or any other number of rules or regulations made for the government of the church, and afterwards there were added one hundred other and supplementary rules and regulations, that the body of the church would be the same; that is, it would be the same unless there was a radical change made in its organic structure, or faith and doctrine; but it would be the same body if the rules and regulations added were in harmony with its organic laws, and particularly would this be the case if the same body of people substantially remained with it and came under the government of these rules and regulations. So that it is the same church even if it has additional or added rules for its government in the Book of Doctrine and Covenants, so long as they are not in conflict with its organic laws and fundamental
97 principles. We do not propose to reorganize a dead body, in the case of the reorganization of the church the body was alive all the time from 1844, although for a time its vitality was very low.

Those individuals who had been members of the original church met together, as they had the undoubted right to do and renewed their faith by entering into a representative organization, few at first, but gradually gathered others who had also been members of the original church during the lifetime of Joseph and Hyrum Smith. That was the way it was done, and out of the scattered remnants of the original church who remained steadfast in the faith the work of reorganization was begun and carried through to its successful consummation.

At the time of the death of Joseph and Hyrum Smith there was a change of administration, which a great many of the adherents of the church, could not and did not accept, and these parties scattered throughout a great many different counties in Iowa, Wisconsin, and
98 Illinois, and having confidence and faith in the church to which they had belonged, and having been consistent members of it, they essayed an organization upon the principles existing prior to the death of Joseph and Hyrum Smith.

They met by the authority that all individuals had to meet who were constitutional members of the church before its fall. No single individual member had the right to assemble the church, but he had a right to commence the movement however. A dozen individuals

would have the right to assemble in a church of their own free will and accord, and there was no restriction in that, except of course they must have been members of the old original church. I am not aware of the fact, that I have made any such a statement or claim, that the church had been dissolved, I have not and did not make any such statement. The church had not dissolved, for they were its members, and had the undoubted right to claim the privilege of exercising the rights of membership. They were undoubtedly members, and were in reality of the church.

Some of them had been attending church in certain places, but not attending conferences, for the reason that none had been held by those who believed with them; but conferences had been held by other parties who afterwards came into the church.

Conferences were held by the old church in the usual way, I think they were both semiannual and annually held. That was according to custom, not according to law, for the law simply says they should meet from time to time. The times of meeting were fixed by the church itself, and fixed according to custom and convenience, I presume. There was an interval between the dates of the semiannual conferences. These people who met in 1852, met in accordance with the custom. The custom of meeting together for conference and for preaching and for song service, and for prayer service, that is how they happened to come together, they would be in their local assemblages of course.

99 I cannot tell you who notified them to come together at Newark, Wisconsin. I cannot tell that anyone did, that was before my connection with the church, and I have no personal knowledge of the facts and circumstances surrounding that meeting. I cannot say anything about that, for the reason that the conference was held in 1852, and I became connected with the church first in 1860.

Yes sir, I stated that I did not go with those who left Nauvoo, in 1846 or 1847, and went to other places, and also that quite a number of others refused to go, and that my refusal to go was based upon additions to the doctrine and practices of the church, or rather I should say practice of members claiming to belong to the church. I considered that I was doing right in refusing to go.

I could unite with the reorganization and be consistent because there was no rule or doctrine changed or added by the Reorganized Church that differed in any material degree from what was in the original church,—nothing that was in any respect in conflict with the organic structure of the church as it existed in the days of my father.

There has been nothing added in the rules and regulations since I have been a member, that has been subversive of the rights of the people or the organic structure of the church, while in those we ob-
100 jected to we considered there were.

The authority that has governed me in this matter is my own individual opinion, of what the rules and organic structure of the

church, its doctrine, and faith, and principles as laid down in the recognized standards are. My estimate of these things, as a matter of course, governs me in my choice of principles and doctrine.

I do not know what governed the individual opinion of the other parties who joined in this movement with me; I do not know what their motives may have been. The persons who effected the reorganization, in 1852, affirmed that they were directed by revelation; but whether they were or not is a matter for them to testify to, and not for me; that is their testimony, and not mine.

In respect to uniting with the Reorganized Church, I was led by revelation. If the affirmations of the people who reorganized the church in 1852 are correct, it was reorganized in pursuance of revelation; that is what they say, but of course I cannot testify as to that. That is a matter that I am not a competent witness to prove.

I cannot tell you how you can ascertain whether they were deceived or not. I cannot tell you how you can ascertain whether I was deceived in uniting with the reorganization.

101 I do not fill the gap between the disruption at Nauvoo and the coming together again in 1852, by the assumption that the people were authorized to come together in 1852 by revelation. My understanding of the matter is this: persons invested with a right of membership in the original church did not lose that right because of the introduction into the church of new doctrines and teachings which they held to be pernicious or incorrect doctrines, because of their conflict with the fundamental principles of the church into which they had been baptized; and these parties remained in the country round about, one in one direction, and one in another, and began again to collect together. They had done this prior to the conference of June 12, 1852, although this was the first regular conference that had been held after the dispersion. They had met together in small bodies prior to this and had agreed among themselves, and by a call to others, to meet together at Newark, Wisconsin, to take in consideration what they should do in regard to their membership. Now that is the way I understand it; but what moved them to that course, personally I do not pretend to say. I do not know the facts of that, only as I have been told and from the records of the conference.

I do not think there is any history authorized and accepted by the church. There was a statement made by one of the men who was present at that meeting, I think the one who presided at that conference, and he gives a historical statement, which is accepted by the
102 Reorganized Church as a true statement. That is accepted by the individual members of the church as being substantially a true statement of the conference and the matters that transpired there, but as to that I do not know personally. I do not think there has been any historical statement of that conference accepted by the Reorganized Church as to what transpired there. I think Zenas H. Gurley wrote an article which is entitled, perhaps, a history of the Reorganized

Church, and it was published perhaps in the *Herald*. I do not know that it was ever completed, but it was simply published as his statement, and so stands in the columns of the *Herald*.

I am only casually familiar with the minutes of the conference, offered here and identified as an exhibit. I have read them in a general way, and not with any intention of charging my mind with the contents to a sufficient degree to state confidently what they contain. I was not a participant in any of the meetings or gatherings
103 of the Reorganized Church from 1852, to 1860, and therefore of my own personal knowledge I do not know anything about them. I heard from time to time that there was an attempt being made at reorganization; I do not remember anything positively until 1856, when two of the members visited me. The two persons who visited me I think were elders; that is my understanding, but I do not state it as a positive fact.

I understood they had a president of the Reorganized Church, provisionally or temporarily, from 1852 to 1860. I do not know of my own knowledge about that. There is a provision of the law that would authorize a provisional president in a promiscuous assemblage—the one holding the highest authority presides. That is a principle, however, that is acceded to by us in the Reorganized Church, that in a promiscuous assemblage where there is not any organization, the one holding the highest authority present presides.

I stated the fact to be, that in 1860 I was elected or ordained to preside over the church as its president. As I understand it, I am to preside over the organized assemblies held from time to time, and have a spiritual watchcare over the whole church, in connection with my colleagues.

104 At present I am Associate Editor of the *Herald*, but it is not inherent to the office of President of the Church.

The priestly functions connected with the office would be presiding over the authorities of the church, or over the priesthood of the church. Yes sir, I am a high priest and the Presiding High Priest. The rule of law requires that there should be three when the quorum is full, chosen from amongst the high priesthood, and the President of the Church is called President of the High Priests or High Priesthood. These three form a presiding quorum called the First Presidency. There are but two, who are at present acting.

There was the same organization at Nauvoo, prior to 1844. Prior to 1844, June 27, my father and his counselors comprised the First Presidency. The right of revelation did not inhere in the First Presidency, because the right of revelation inheres to every member of the church who is possessed of the gift, but the gift to receive revelation for the church and its guidance inheres in the Presidency of the church, and whatever purports to be revelation is still tested, as has been the custom; that is, whatever purports to be revelation for the doctrine or government of the church, or affecting either in any material issue, before it becomes authority, must be presented

to and acted upon by the presiding quorums of the church,—the Presidency, the Twelve, and the Seventy especially.

I think we have the record showing that this was done with revelations given through my father. It is not in the law, it is in the records of the General Assembly held on the 17th of August, 1835, on page 255, of Exhibit E, and the same history is found in the current literature of the time. That statement is accepted as the minutes of an assembly held on that day, and only that. It is accepted for what it purports to be, and nothing more. I do not know that
105 there is any doctrine in it, it is a simple statement of events as they transpired. The same record, or substantially the same, was published at the time in the *Evening and Morning Star*, or the *Messenger and Advocate*. I do not know just which it was, but it was one of these publications. I cannot tell you whether the facts recited in the minutes of that assembly were true or not. I took it from history for what it purports to be, for a record of a thing that occurred. I was not there at the time; at that time I was not yet three years old, so I do not know anything about it, of my own knowledge.

The proceedings and action taken at that meeting, August 17, 1835, are a precedent to the Reorganized Church of the present day. They are a precedent, that is all. All the revelations, with perhaps one or two exceptions, that are recognized as binding upon the church, the Reorganized Church, are found in this Book of Doctrine and Covenants published by the Reorganized Church in 1882. There are some later that we have not as yet printed in the book. I mean there are one or two that we have not printed in the book as yet; that is, they are not as yet printed and bound in the book that you have there.

I think likely there are some matters regarded as authority in the Reorganized Church, not found published in the Book of Covenants. In the spring of 1891 there were instructions received and acted upon by the church that are not incorporated in that book; but they are received, accepted, and acted upon by the church, but are not in the book.

I do not know whether the revelation of February, 1834, was accepted and adopted by the quorums before Joseph Smith was killed. I could not tell you whether that revelation is in the first Book of Covenants; I hardly think it is. I would not say positively, but I am pretty sure it is not.

106 The revelation given June 28, 1834, on Fishing River, Missouri, has been received by the Reorganized Church for what it purports to be. It is recognized as a rule of action by the church of which I am now the president. We recognize it in so far as it purports to be a rule of action. I do not know whether that was in the first edition of the Book of Covenants or not. I could not say that it was ever received by the General Assembly or by the quorums before the death of Joseph Smith.

Section 105, of exhibit J, entitled "The word of the Lord given unto Thomas B. Marsh," at Kirtland, I hardly think that is in the first Book of Covenants, because the first Book of Covenants was published in 1835; this was given in 1837. I do not see how it could have been printed in the first edition.

That is regarded as authority by the Reorganized Church for what it purports to be; it is accepted for what it purports to be. I do not know that it was ever adopted by the assembly and accepted by the quorum before the death of Joseph Smith.

The revelation of July, 1838, exhibit J, section 106, is a rule of action; so far as it purports to be it is. It is accepted and acted upon for what it purports to be. And the same is true with regard to the revelation of January 19, 1841, on page 301 of exhibit J.

107 The letter of Joseph Smith dated Nauvoo, September 1, 1842, found on page 320 of exhibit J, the Reorganized Church accepts simply as a letter, what it purports to be. We understand it to be a letter of instruction at the time written by Joseph Smith to the members of the church. We have regarded it as indicative of what our action should be. We regard it as his opinion. But we examine these things for ourselves, but give due weight to his opinion as expressed in that communication.

The letter dated September 6, 1842, is of the same nature; it is a matter of instruction, and may or may not be considered authoritative as the question may be considered.

Section 113 of exhibit J is simply considered by the Reorganized Church as a narration of circumstances attending the killing of Joseph Smith and his brother Hyrum, and as being written by parties competent to write it. That is all so far as the relation of the facts is concerned; it is true so far as I know; they are in connection with the event, and we believe it to be a true historical narrative of the transaction, and nothing more.

Page 336, exhibit J, after the word *supplement*, is what purports to be the action of the conference of the Reorganized Church, I believe it is regarded as authoritative. It was intended to be so regarded, and I believe it is.

The subsequent pages of exhibit J from page 336, contain deliverances from the President of the church. These were delivered to the church by me as the President of the Reorganized Church.
108 These have been accepted by the church to which I belong.

112 I do not understand that there has been any addition to the doctrine of the church, all that has been done is in reference to methods of procedure, and elucidation of what has already been written. That is all that this which you call additions consists of.

The doctrine of the church to which I belong and its teaching and practices are the same as the doctrine and teaching of the original church from 1830 to 1844. I do not understand that there was any
113 doctrine of the church prior to 1844 or 1860, cautioning the church

against the ordination of men of the negro race to office in the church. I do not understand that there is now.

There was authority in the old church for a district organization, I think. I do not know that I could specifically point it out. It is a matter growing out of the organization, and the word *district* is used in distinguishing conferences or organized branches, the one from the other. It is possible that the term is used with that understanding. In the organic law the declaration is made that the elders shall meet in conference once in three months, or from time to time to do the business, whatever it may be, at the time, and in the manner that the conference shall appoint. It is also the duty of the branches to send a list of their membership who last joined, or who
114 were disfellowshipped. Branches consist of congregations of the church. Elders, priests, teachers, and deacons, whatever officers there are, except in some districts where they have adopted a system of representation by delegates, or delegate representation. The law to which I refer says the several elders shall hold conferences. It says also that the branches shall send some officer or teacher, or by the hand of some priest their reports.

I do not think that the revelation on conduct and cleanliness is an added law of the church. It is a matter of instruction, an elucidation in the way of instruction. It is merely a matter of instruction, and it is in harmony with the revelation found in the first Book of Covenants, published in 1835.

The revelation contained in the first Book of Covenants does not prohibit the use of tobacco entirely. It is called a Word of Wisdom and instruction and not by way of constraint; you can use tobacco for some purposes. It does not permit the use of a small amount for a man to chew or smoke, that is my recollection of the way it reads. Yes, sir, this law to which I refer has something to say about the ornamentation of the person. It says let your ornamentation be the work of your own hands, but does not limit the amount, leaving that to the individual's taste. I think the word used is ornamentation, but it may be embellishment.

115 Revelations as I understand it, are received in different ways, sometimes by impression, sometimes by the person becoming conscious of it, and sometimes by audible voice heard by the individual by whom the revelation is received, and sometimes by a direct messenger, and sometimes by what we understand to be the intervention of the Spirit. No, sir, it does not rest on a man's own judgment as to whether or not the revelation is received by impression, or by
116 audible voice from without. I do not so understand it. If anybody says anything to me I understand that they say it, and if I hear what they say clearly and comprehend it, it is not a matter of my own judgment as to whether I hear it or not. I am forced to accept it and judgment as to whether or not I heard the thing is not called into question, for it is a matter that is not involved in doubt at all. Whether I accept it depends on circumstances under which the com-

munication is received, such as whether there is a reason for it, or occasion for it, or whether it comports with that already received upon that subject, if anything has been said upon that subject. A man may be mistaken even though he be the President of the Church, as to the genuineness or authenticity of revelations claimed to have been received.

Revelations received are not binding upon the church, nor do they become law or rules of action for the church until they have been formally adopted by the body; when they are accepted by the church, then they become binding upon it. Yes, sir, it is a law of the Reorganized Church that new revelations may be given and accepted by the church, and thereby become law to the church. Yes, sir, that is done under our declaration of faith. We believe that God has revealed himself in times past, that he does reveal himself, and will continue to reveal himself to men upon this earth whenever such revelations are needed according to his divine judgment. We believe this because we know it to be so, and we therefore look for further revelations in the future at such times and places and through such instrumentalities as he sees fit to make the medium of his communication to this earth.

Of course the church that existed from 1830 up to the time of the disruption in 1844 had none of these subsequent revelations, nor those given to the Reorganized Church. I cannot tell you whether the church from 1830 to 1844 as a fact had the same rules and laws of doctrine as are to be found and set forth in the 1835 edition of the Book of Doctrine and Covenants. If the laws or revelations con-
117 tained in the Book of Doctrine and Covenants published in 1835 were received and accepted by the body before 1835, then they had them, then they had the ones that are contained in that edition; but the church could not be governed by the law prior to the time of the passage of the law. It would be like attempting to govern a territorial community under a State law. I understand that the law is not enforced until after it is enacted. We may receive a revelation and act upon it, and the matter afterwards be submitted to the body authorized to pass upon the revelation, and it be sanctioned. That has been done in the church.

I would not be willing to state upon my oath, or even make a statement without being on oath, that the church prior to 1844 received and acted upon revelations that were not given until after that time. No, sir, I would not make that statement under oath, or upon my own judgment; it would not be true.

Yes, sir, I understand the controversy in this case is to obtain control and possession of the "temple lot" in the city of Independence, Missouri. I am the chief officer in the church which claims to bring the action. As to what right the church that was reorganized in 1852 has in and to the property in controversy, my answer is, that
118 so far as my knowledge goes, the Reorganized Church has paid money out on account of that temple lot, and to-day is occupying a

part of that temple lot; I do not know how large a portion, but it is by metes and bounds. I believe that is a fact, that they are occupying a portion of that temple lot. I do not state that as a positive fact, I state it as my best knowledge and belief. I do not know that I mean a part of the particular ground or land that is in dispute in this case; I mean a portion of what is known as the "temple lot." I do not know that the church has ever paid anything in that way, except it has paid a portion of the taxes.

I do not know of any revelation that will authorize the Reorganized Church of Jesus Christ of Latter Day Saints to take property from other people who have paid their money for it, and not give them anything in return. I am one of the incorporators of the Reorganized Church. I believe the most of the incorporators reside at Lamoni, Iowa. If they do not all reside there, by an examination of the names I could probably give the names and their places of residence. Robert Winning, whose name is attached to the Articles of Incorporation, resides at St. Joseph, Missouri; J. B. VanMeter lives at Tuskeega, Iowa; he is one of the incorporators. Edwin A. Blakeslee at Galien, Michigan. All the rest of the incorporators
119 live at Lamoni. These parties whose names appear upon the Articles of Incorporation, incorporated of their own accord by direction of a General Conference, or by permission or instruction of a General Conference of the church. I think it was by permission or by direction of the Spring Conference of 1891.

The parties whose names appear to the Articles of Incorporation were not authorized by name to incorporate; it was not necessary to do so. The majority of them were residents and living at Lamoni, and were members of the church or branch there; and they were present at the meeting at the time this incorporation took place, and signed the Articles of Incorporation. I mean the meeting held at Lamoni, of the local organization for the purpose of incorporating. They proceeded to adopt the Articles of Incoporation at that meeting, and signed them at that meeting; and I believe that every member that was there present signed them. That was the regular meeting of the branch. By regular meeting of the branch, I mean a meeting that is held at regular intervals—a fixed meeting, a meeting that is held for the transaction of the regular routine business of the branch. The meeting was called Saturday evening; it was a stated meeting, and notice had been given of what would take place. It was a meeting of the local branch at Lamoni. There was no resolution passed at that meeting authorizing these persons to effect this incorporation; that was done by the conference at Kirtland; but the Articles of Incorporation were presented to the meet-
120 ing, and were adopted by the meeting, approved and signed upon such adoption. Yes sir, the people did that; those present. I think every member present signed these. The people whose names appear here signed to the Articles of Incorporation were present.

After the articles were accepted and signed, they were filed in the office of the Recorder of the county.

This paper here I recognize as the original Articles of Incorporation. That is the original and my name is signed to it. I think most of the names were signed in my presence, but some of them may not have been signed there, those of course I did not see. There were some parties who signed these articles who were not members of the local church at Lamoni. Robert Winning, Mr. Kelley, and Mr. Blakeslee.

Yes sir, there is now a presiding High Priest over the high priesthood recognized by the Reorganized Church; that person is myself. I was ordained to that office in April, 1860; I was ordained at that time at Amboy, Illinois, at the conference held at that time. I was ordained twice at that conference; the first ordination was as a high priest, the second as President of the High Priesthood; that is the order in which the ordinations took place.

The published minutes of that conference are correct in that respect; I think so. I think they are, but I cannot be positive on that
121 point; however, I think they are correct. The pamphlet handed me I recognize as a copy of the *Herald*, published in May, 1860. I do not recognize the publication of the minutes of that conference contained in the paper handed me as an official publication. No sir, that is a copy of the publication as it appeared in the Amboy *Times*, a local paper. I cannot tell you as to their correctness; they are the minutes as published by Isaac Sheen; he was editor at the time, but whether these minutes are correct in this report or not, is something I could not say positively.

The minutes of that conference as shown in the record, exibit N, with reference to my ordination, appear on pages 59 and 60, and read as follows: "Joseph Smith, son of Joseph Smith the prophet, seer, and revelator, and lineal heir to said office and station according to the law and order of the holy priesthood, was then introduced to the conference, and he delivered an address, explanatory of his views, principles, doctrines, and faith. On motion of Isaac Sheen it was resolved that Brother Joseph Smith be chosen prophet, seer, and revelator of this Church of Jesus Christ, and the successor of his father." That is the first reference, the reference on page 60 is, "By unanimous vote, Brother Joseph Smith was ordained President of the High Priesthood of the church by Brothers Z. H. Gurley and William Marks." The two ordinations as high priest, and President of the High Priesthood, took place at the same time; I was ordained first as high priest and then as President of the High Priesthood. Yes sir, the minutes show an ordination as Presiding High Priest, or President of the Priesthood.

122 I hardly think it would be proper to ordain a President of the High Priesthood, without there being first an ordination to the office of a high priest; but in this case I know that I was ordained a high priest. There is no manner of doubt of that, and afterwards was or-

dained to the Presidency. I know that as well as I know anything that ever happened within my experience. My ordinations took place, one before the other. I do not think any proceedings of any kind intervened between the ordinations; I think not. My impression is that there was a motion made and a vote taken on that motion to ordain me a high priest at that conference.

Exhibit J, paragraph 11, page 291, which reads, "Of necessity, there are presidents, or presiding officers, growing out of, or appointed of, or from among those who are ordained to the several offices in these two priesthoods. Of the Melchizedek priesthood, three presiding high priests, chosen by the body, appointed and ordained to that office, and upheld by the confidence, faith and prayer of the church, form a quorum of the presidency of the church,"—I recognize that as a rule of government of the church.

I recognize this also as a law. On page 294, exhibit J: "Wherefore, it must needs be that one be appointed, of the high priesthood, to preside over the priesthood; and he shall be called president of the high priesthood of the church, or, in other words, the presiding high priest over the high priesthood of the church. From the same comes the administering of ordinances and blessings upon the church, by the laying on of hands."

123 Yes, sir, I am the successor of my father in this office. I so understand it; it is so understood by the church to which I belong, that I am by his choice. I am in a position to exercise the gifts of president if required and directed so to do. When directed to do so, or required to do so, I stand in a position to receive. The church to which I belong looks upon the whole Book of Mormon as a revelation, including the part which you have read. The part which you have read is just what it purports to be, a narration of what was said by these two people at that time, the king and Ammon.

126 No, sir, I did not state that I was ordained by my father; I did not make that statement. I was not ordained by my father as his successor; according to my understanding of the word *ordain*, I was not. I was blessed by him and designated, well in a sense chosen, and the word *ordain* could not be applied in any other sense than by the act of pointing out or indicating only, and he indicated or designated me as his successor.

I do not know what significance you might attach to the word *call*, but I understood it at the time, and understand it now to have been a blessing conferred upon me, and by the act conferring certain privileges upon me, or to designate me to do certain work, depending as I understood it then, and understand it now, upon good behavior, and upon any subsequent call I might receive.

I claim to be his successor by lineal right, and by his blessing, and lastly by the right of selection and appointment. It is not necessarily a birthright to be the President of the Church. It comes by virtue of fitness and qualification, I may say, good behavior and the choice of the people, recognizing a call or a right.

Lineal rights do not necessarily assume these qualifications. In my case I cannot say that it assumed these qualifications; that is a matter I apprehend to be proven. I do not know whether the doctrine of lineal right was a doctrine of the church prior to the death of my
127 father. I do not know other than what may be found in the books, and they are open to the inspection of all, there is a traditional teaching in the books to that effect. In the church to which I belong it is not a lineal right, excepting so far as it is found in the books. The right of the firstborn is found in the Book of Mormon, and also in the Bible. That is the traditional right of the firstborn to whatever may attach to the parent. That right is expressed or understood in such a way that whatever rights I hold or am gifted with by reason of the position I hold, would descend to my eldest son, with certain qualifications, all other things being equal. The same attaches to the firstborn of every family. Now the claim of the Reorganized Church to the succession of the original is a claim of the individuals who were members of the church at the time of my father's death, and who hold their membership, and their rights to be regarded as members of the body in the Reorganized Church. I do not regard my lineal successorship as one of the claims, not necessarily. The existence of the Reorganized Church does not depend on my lineal successorship as I understand it.

I have never seen the records of the church that were kept from 1830 down to 1844, and I do not know anything about them, with the single exception I told you about—the minutes of one of the quorums of elders.

I have never seen any report of the accounts of Bishop Partridge. I do not remember that I ever saw a publication of it.

There was an office in the old church designated as the office of Patriarch; that occurred along towards the latter times of the church at Nauvoo. There is no such office in the Reorganized Church. There is a provision in the organic law of the church for the office, but we have no patriarch ordained. The right to that "office" is the same as the other, subject to the qualification—that all other things
128 being equal and the test of personal fitness. I made a statement or suggestion a while ago, that it does not simply inure to one, but it attaches to all eldest sons. All who are officers of the church, everybody, every family, whatever right belongs to or pertains to the sire descends to the son, all other things being equal. It is not a right that must be enforced, for it may never be exercised, or it may be held in abeyance. That is a traditional rule of the Reorganized Church. It is not laid down in the teaching of the church, nothing more than what appears in the Bible, and Book of Mormon, and the Book of Covenants. I do not know whether that rule was practiced in the church prior to the death of my father.

Yes sir, the Reorganized Church has a Book of Rules that pertains distinctly to that church. I do not know whether it is here or not. There was a book of rules of the old church. I have in my library

Jefferson's Manual; that was used as the parliamentary practice by the people of the old church. It was in my father's library and came to me in that way. Our Book of Rules is not Jefferson's Manual; it is a book that was compiled by the authority of a committee of the conference, and appointed by the conference for the purpose of compiling a book to govern in debates, public meetings, etc.; and when the book was compiled it was accepted by the church.

We have no school, denominated the School of the Prophets in the Reorganized Church. I understood there was at Kirtland, but I cannot say whether there was one at Nauvoo or not. I cannot testify to these things, for they are matters of history, and that is where I get my information, simply. My knowledge in regard to the customs of the old church is derived principally from reading and what occurred during my boyhood. We have a body called the apostles, but there are not twelve in number at present. The Reorganized Church has never had the full number of twelve; I believe the old church had, that is my understanding. I think it had a full number at the time of the death of my father. The Twelve are the traveling ministers whose duty it is to travel and preach, and take charge of the 29 ministerial work; that was their duty in the old church, prior to the death of my father, as I understand it.

I might say that they were the leading quorum in the church, and their work was of necessity of great importance to the church and its welfare. So far as the work of preaching was concerned they constituted the leading quorum in the original church and also do in the Reorganized Church.

I believe the majority of the Twelve at the time of my father's death afterwards went with Brigham Young to Salt Lake City. I think nine of them went.

Possibly it may have been at the conference of 1852, of the Reorganized Church, (the history states,) that there was a number of apostles appointed of the reorganization. Seven were chosen from among the people, or the elders or ministers present, and they were chosen and set apart to act in the apostolic office.

Notwithstanding the fact that the son succeeds to the right of the father, we had a right to select a new Quorum of the Twelve, simply because the conditions had changed and were not equal. The right of the son to succeed to the office or function of the father, does not depend upon his lineal descent alone; it has a codependence, and that is the fitness and moral qualification of the son to succeed the father. In this case other things besides the question of lineal descent were not equal.

The ones that went west to Salt Lake Valley were preaching and openly proclaiming and practicing a doctrine contrary to the fundamental principles of the church, and all its teachings, and they who reorganized the church in 1852 repudiated that doctrine and it is not likely that in the reorganization they would ordain the sons of men who were preaching a false and pernicious doctrine.

They assumed to do that by the inherent right of manhood and humanity, to assert their opinions, and defend their principles and rights. That was the right, sir, and the people who met together in 1852 and reorganized the church asserted that right by reëstablishing the church in its purity. Yes, sir, they had the ecclesiastical right the same as they always had. Their hope of salvation depended on the proper and pure exercise of these functions, and they were responsible to God and not to man for the way in which they exercised the gift that God had given them. Yes, sir, that law is found in our standard books. It is to be found in the Bible, in the Book of Mormon, and in the Book of Covenants. I can point it out to you. Some of it is as follows: "He that loveth me keepeth my commandments, and the same is my disciple," and also the statement of our Savior to John, "If you continue in my doctrine, then are ye my disciples indeed;" and he also says, "Ye shall know the truth, and the truth shall make you free." Now these people who went to Utah were addicted, before they went, to the practice of polygamy, and continued the practice after they went there to a great extent still, and that is something that is forbidden in the books that are authority in the church. That is not simply my opinion, no sir; I know it. So far as John Taylor's opinion and judgment is concerned it may be as sound and legal as mine concerning his own deportment, but when John Taylor or any other man presumes to preach and practice a doctrine contrary to the teachings of the books of the church, or the books that the church has authorized and recognized as authority, it is the right of everybody, either individually or collectively to say whether or not they shall follow his example or associate with him, or anyone else who preaches these doctrines that are forbidden and condemned by the church in its authorized books of doctrine and practice.

Yes sir, every individual who retained his self-respect and integrity according to his judgment had the right to pass on that and repudiate it if he felt so inclined; and this is just what the Reorganized Church did do collectively, what the individual had the right to do by himself. There has been no arbiter between myself and the church at Utah, nothing but the books,—the commandments and the law as we found it. No sir, the question between the Reorganized Church and the Utah Church has never been ecclesiastically adjudicated; there is no competent ecclesiastical tribunal before which the question of heresy and orthodoxy can be tried this side of the judgment seat of Christ; but there are standards among men, especially among the Latter Day Saints, which are equivalent to them at least. We have the standards and the guides that are laid down as rules of action in the lives of men, and when men go contrary to that, we have the right and every man has the right to refuse to follow the false teachers and leaders, and to denounce their action and teachings. Yes sir, if one man has the right to fix his standard of action, another has the same right.

It may be a fact that more of the people who adhered to the church during the time of my father went off with the Salt Lake faction, than afterwards came into the Reorganized Church, but I think more remained behind than went to the valley, I mean Salt Lake Valley.

I can give you some data if you choose to accept it. At the time of the death of Joseph and Hyrum Smith there was something like one hundred and fifty thousand (150,000) or two hundred thousand (200,000) members of the church in America, Europe, and the islands of the sea; and there was at Nauvoo and the State adjacent something like twenty-five thousand (25,000); that was the number there then. And in 1850 there was something like fifty thousand (50,000) in Utah Territory, and the census of 1880 gives us something like one hundred and forty-three thousand (143,000) as belonging to the entire Utah Church that apostatized. Under this showing there is a question whether or not there were not more who did not go west, but remained behind, and became scattered to the four quarters of the globe. All who remained and did not go to Utah have not united with us. There were a great many who went off with different factions, and others who have not united with any faction of the church, but who have dropped out of it altogether. There are other factions of the church that claim succession, just like the one does here, at Independence, Missouri.

132

The Utah Church is usually recognized as or by the name of The Church of Jesus Christ of Latter Day Saints. I do not know when that name was first adopted. That is the name of the church that existed at Nauvoo, before the death of my father. The difference between the name of the Reorganized Church and the name of the Church in Utah, is the prefix *reorganized*. My knowledge of the name of the church has been "The Church of Jesus Christ of Latter Day Saints," and I only know that from history as I read it, that the body was called at one time "The Church of Latter Day Saints."

133

Yes sir, I hold the same office in the Reorganized Church, that my father held in the original church. I am an apostle; I was ordained an apostle; I mean by that I was ordained a high priest which made me an apostle, but I am not standing in the Quorum of the Twelve Apostles. All high priests are apostles when they are engaged in apostolic work.

138

I believe I know what is meant by the rejection of the church, as that term is used. We understand it to mean the introduction of doctrines and practices subversive of the faith of the church, and that in such case the church in its organized quorum capacity that introduces such doctrines and practices is rejected of God. Yes sir, you can put it that way, rejected by God, if you desire, and also rejected by those who remained pure and steadfast in the principles as they held them and believed them, and under which they were baptized; that is the way we understand it, Colonel.

140

We draw the line for the acknowledgment of authority at the time

of the death of Joseph and Hyrum Smith, June 27, 1844. All baptisms performed in the church prior to that time we consider valid and good, but baptisms performed subsequent to that time we consider them to be subject to inquiry as to their character.

141 I recognize the paper which you hand me; it is a copy of the *Saints' Herald* published at Plano, Illinois, date, October 1, 1879; I think I was editor at the time. I recognize the article on the first page entitled, "Last Testimony of Sister Emma." The article is a statement made by my mother; her name at the time was Emma Bidamon; she was the wife of my father, and his only wife as I understand, yes, sir. The article purports to be questions asked her, and her answers to them. The time of the interview was 1879; it was published October 1, 1879, according to the date of this paper. Mrs. Bidamon died during the month of April, 1879; the minutes of the interview were written at the time the questions were asked and the answers given. I was present at the time of the interview, her husband was also present all the time. Her husband was Lewis C. Bidamon, of Nauvoo, Illinois, at the time. I took minutes at the time the interview was had, the minutes as published October 1, 1879, were the same as the minutes which were taken at Nauvoo in February. They were not changed in any particular; substantially the interview is published just as it occurred. I will not state as to the consecutiveness of the questions and answers. I cannot say why the minutes were not published before her death, any more than that we were pressed for room at the time, and she was taken sick not a very great while after that, and I attended on her all through her sickness, and helped to bury her.

REDIRECT EXAMINATION.

142 There have been a great many churches since 1844 that have claimed to be the successor of the original church founded in 1830. Their name is almost legion. There was the organization that went west under the presidency of Brigham Young, and there was another under the leadership of James J. Strang, at Voree, Wisconsin, and Beaver Island, in Lake Michigan; there was an organization under Alpheus Cutler, at Fisher's Grove, Iowa, and there was one at Preparation, Iowa, under Charles B. Thompson; and there was one under the leadership of Gladden Bishop at Little Sioux, Iowa; and there was another one attempted by one James Colin Brewster at various times since 1844; there was one by William Bickerton called the "Bickertonites," and there was one by Granville Hedrick, and one by William Smith; one by Joseph Morris called the "Morrisites;" one by a man called William Davis, called the "Davisites," or Canaanites, a portion of which are at Walla Walla at the present time; and one by David Whitmer, and that is I believe what is called "The Church of Christ." I do not remember any others just now, but there may
143 be others for all I know to the contrary. Yes, sir, there was a faction under the leadership of Sidney Rigdon, that settled in the Cum-

berland Valley, in Pennsylvania. There were a great many of these factions into which the church broke up at the time of the disruption; there were lots of aspirants to Moses' seat. Sidney Rigdon was a member of the old original church, he was at the time of my father's death a counselor or one of the First Presidency. There was also a faction under the leadership of one of the original Twelve, Lyman Wight, that located in Texas, he was one of the Twelve at the time of my father's death. There were one or two more factions that I remember now, one led by Zadock Brooks, and one by W. A. Miner, and I think another called the "Church of Zion" that was led by Dr. W. McClellan and others. I do not know that I have named all of them, but that is all I can think of just now.

All of these different factions and leaders I have named as I understand it, did take more or less in numbers from the original church. I know some of the members that went with each of these leaders. Rigdon, Lyman Wight, Alpheus Cutler, Bishop, Brewster, Bickerton, David Whitmer, William Smith, Charles B. Thompson, and some others. I knew them when they were members of the original church, and after they were united with these other parties. Nearly all, I may say, of these factions that I have named have come into the Reorganized Church. There has been large accessions to the Reorganized Church from these various factions or organizations.
144 Notably, this is a fact from the church in Salt Lake Valley, the Salt Lake Church. There have been large accessions to the Reorganized Church from the organization in Utah, and from that inter-mountain country; those who went there under the leadership of Brigham Young; and the "Strangite" faction under Mr. Strang, and a number of those that were with Mr. Smith, Alpheus Cutler, Lyman Wight, Charles B. Thompson, Gladden Bishop and others. I may say that nearly all of them have since united with the Reorganized Church. William Smith, himself is with the Reorganization, and the majority of those who were with Alpheus Cutler at Fisher's Grove, Iowa.

Mr. Sloan, he was the Recorder of the Church at Nauvoo, Illinois, in 1844. He afterwards became a member of the Reorganized Church. He died near Salmon Falls, California, not many years ago. I knew him when I was a boy at Nauvoo.

The Reorganized Church gets its authority for submitting to the quorums and body for their indorsement, revelations, after they have been received, from the Bible—the teaching of the Bible, the Book of Mormon, and the revelations to the church in an early day, which required that the common consent of the people should be obtained, I may say shall be obtained; for I take it that it is mandatory.

We have an illustration in the giving of the law from Sinai, and its submission to the people by Moses, and its acceptance by them, and the consequences attending its acceptance or rejection according to the word of God.

This is not a new mode that has been introduced into the church since the reorganization. The reorganization has endeavored to follow the teaching and precepts of the old church from its inception.

Now there is one item of the law that requires or states, that the three leading quorums of the church have what may be called
145 concurrent jurisdiction, and the decision by either one of them is equivalent to a decision by either of the others, thus exercising or maintaining a neutralizing power in cases of conflict, so that the rights of the people may be kept free from imposition by false doctrine or theory by anybody; and also in the rules of the Doctrine and Covenants, which require that matters of that importance shall be submitted to the body for their action, for approval or disapproval, at the conferences held from time to time when they meet.

As part of the direct examination of this witness, plaintiff now offers in evidence paragraph four, section forty-three, of Exhibit E, being the 1835 edition of the Book of Doctrine and Covenants, as follows:—

"And now if your joy will be great with one soul, that you have brought unto me into the kingdom of my Father, how great will be your joy, if you should bring many souls unto me? Behold you have my gospel before you, and my rock, and my salvation: ask the Father in my name in faith believing that you shall receive, and you shall have the Holy Ghost which manifesteth all things, which is expedient unto the children of men. And if you have not faith, hope, and charity, you can do nothing. Contend against no church, save it be the church of the devil. Take upon you the name of Christ, and speak the truth in soberness, and as many as repent, and are baptized in my name, *which is Jesus Christ*, and endure to the end, the same shall be saved. Behold Jesus Christ is the name which is given of the Father, and there is none other name given whereby man can be saved: wherefore all men must take upon them the name which is given of the Father, for in that name shall they be called at the last day: wherefore if they know not the name by which they are called, they cannot have place in the kingdom of my Father."

I was asked on cross-examination to read from the Book of Covenants with reference to the name of the church. I read, I think it was, the title page of Exhibit E and afterwards the heading, or headlines.

146 The book now handed me, marked Exhibit H, is the Book of Doctrine and Covenants, published at Nauvoo, in 1846; it is the fourth American edition and was printed by John Taylor. The book marked Exhibit H contains the doctrine and usages of the original church and also that of the Reorganized Church of Jesus Christ of Latter Day Saints, so far as it was printed at that time. So far as it was published in collated form in the Book of Doctrine and Covenants, it is all there. The title page of Exhibit H is as follows: "The Doctrine and Covenants of the Church of Jesus Christ of Lat-

ter Day Saints, carefully selected from the revelations of God, by Joseph Smith President of said church. Fourth American edition, Nauvoo, Illinois. Printed by John Taylor, 1846."

The book marked Exhibit I, which is now handed me, is the 1852 edition of the Book of Doctrine and Covenants, published at Liverpool, by Samuel W. Richards. This book, Exhibit I, contains the doctrine and rules of the original church and of the Reorganized Church so far as they were collated and published up to that date. They are Exhibit I in compiled form. The title page of Exhibit I is as follows: "The book of Doctrine and Covenants, of the Church of Jesus Christ of Latter Day Saints; selected from the revelations of God by Joseph Smith, President. Third European Edition stereotyped. Liverpool: Published by S. W. Richards, 15, Wilton Street. London: Sold at the Latter Day Saints' Book Depot, 35, Jewin Street; and by all booksellers. 1852."

I received the book marked Exhibit H as a present from my Uncle Samuel H. B. Smith, on January 17, 1888. He belongs to the Utah Church, the Brighamite Church so called. The title or name of that church is "The Church of Jesus Christ of Latter Day Saints," of which Brigham Young, John Taylor, and the present President Woodruff, have been presidents since its removal there under the leadership of Brigham Young. Samuel H. B. Smith is an elder in that church, but what specific office he holds in the church, I cannot say.

I received Exhibit I from John Lawson, a member of the old church, who after the disruption went to Utah with the party under Brigham Young, but he subsequently united with the Reorganized Church. I gave him one of our later editions for it on account of the date of its publication.

Yes sir, there are rules for the trial of the President of the
147 Church, both in the old church and in the Reorganized Church. He is amenable to the High Council of the church. The High Council is the highest tribunal in the church. I am not sure, but I think the High Council is composed of twenty four (24) high priests. It is fifteen or twenty-four. If he is a member of the First Presidency there has to be a conjoining of the other high priests in order to make up the deficiency. The law to which I refer is section one hundred and four (104), paragraph thirty-seven (37), of Exhibit J, and the same law is found in Exhibit I and H on page (81), paragraph thirty-seven (37), section three (3), of Exhibit I, and on page 109, section 3, paragraph 7, Exhibit H. In Exhibit E, section 3, paragraph 37, page 87, the law referred to is as follows: "And inasmuch as a president of the high priesthood shall transgress, he shall be had in remembrance before the common council of the church, who shall be assisted by twelve councilors of the high priesthood; and their decision upon his head shall be an end of controversy concerning him. Thus, none shall be exempted from the justice and the laws of God; that all things may be done in order and in

solemnity, before him, according to truth and righteousness." Section 14, paragraph 2, page 126, of exhibit E, introduced by plaintiff, reads as follows: "But verily, verily I say unto you, that none else shall be appointed unto this gift except it be through him, for if it be taken from him he shall not have power, except to appoint another in his stead: and this shall be a law unto you, that ye receive not the teaching of any that shall come before you as revelations or commandments: and this I give unto you, that you may not be deceived; that you may know they are not of me. For verily I say unto you, that he that is ordained of me shall come in at the gate and be ordained as I have told you before, to teach those revelations which you have received, and shall receive through him whom I have appointed."

148 I know only from history, when the faction or organization that claims succession to the original church, headed by J. J. Strang, came into existence; the dates are difficult for me to remember; I remember men and faces all right, but it is difficult for me to remember dates. I know the time as I know any other historical fact I read. The faction came into existence very soon after my father's death, possibly in 1844 or 1846; there was a faction known as the "Strangites;" they began organizing at Voree, Wisconsin, and afterwards they went on Beaver Island in Lake Michigan. I cannot give their number, only from hearsay and general observation. I have personal knowledge of one or two branches or churches that are paying allegiance to the faith as taught by Mr. Strang. There are one or two branches in Kansas but I am not sure of the name of the place; there are a number of followers of Mr. Strang in Michigan; they are not organized into branches; some about Coldwater; I do not know how many there are in that organization; they are divided and subdivided in opinion and location. I do not think there are more than forty or fifty in that branch at Muscotah.

The most of the Cutlerites united with us, but a few of them went into Minnesota, and located at Clitherall. The followers that now
149 remain of the Cutler faction are in Minnesota. The organization headed by Gladden Bishop is dissolved; some of the members remained at Little Sioux, Iowa, and some of them united with us, and one of the principal men of that faction, J. A. Forgeus, united with us before he died. I do not know how many there was at any one time; I knew Gladden Bishop and J. A. Forgeus and his family well.

The faction headed by Zadock Brooks went to pieces about Kirtland. Some of them united with us and others left there and went to Texas. I cannot say whether the Brooks faction went to pieces before 1860.

I do not know what became of the faction led by James Colin Brewster; one or two of the members of that faction have united with us, but I do not know them personally; they live in New Mexico. The Brewster faction does not exist now; it has not been in existence for many years.

The faction led by W. A. Miner, I do not know much about, and never did. I met him, however, in Southern Wisconsin or Northern Illinois, about 1867, and it had no existence then.

The William Bickerton faction split up into different divisions; a part of them remained in Pennsylvania, a part of them went into Kansas; I think there is a portion of them in both places yet, but I do not know how many. The part that is in Kansas still holds to Mr. Bickerton, though he himself has been dismembered from the body.

The faction led by William Smith went to pieces like the rest of
150 them, at Covington and Binghampton, Illinois. A great many of the Smith faction united with us; some of them are still living at different places. That faction does not retain an organization. William Smith, the leader of that faction, united with us, as well as some of the members of the faction he headed. That is my Uncle William B. Smith; he belongs to the Reorganized Church, together with a great many of the members of the organization which he led.

The faction headed by Joseph Morris was broken up, Joseph Morris was killed at Weber, Utah. Numbers of the faction, that he led have united with us. There are Elder Forscutt, and Samuel Ackerley, and a number of others.

The faction led by Sidney Rigdon went to pieces up about Pittsburg, in the Cumberland Valley; the faction does not retain an organization I believe.

The faction led by Lyman Wight, or a part of it, located in Texas; but it finally went to pieces, so to speak. It became scattered, and a great many of them came into Iowa, and united with us. Lyman Wight's sons are with us, or a part of them, and one of them lives in Missouri, and is a member of our organization, along with his family. Lyman Wight's widow united with us and also his grandchildren.

The William McClellan faction was located, I believe, at Kirtland,
151 Ohio. They published a paper there at all events. The last I knew of McClellan he lived here, at Independence, Missouri.

There was a faction led by Granville Hedrick, located at first, as I understood it, at Bloomington, Illinois. Mr. Hedrick published a paper there a portion of the time; I believe it was in 1864. I never got acquainted with the organization, though I knew a number of the party. I met Mr. Hedrick several times, and others who were members of the organization of which he was a leader.

RECROSS-EXAMINATION.

I have not attempted to give the specific dates at which these different organizations were formed. I do not know the dates and did not pretend to give them, but I stated it was between the death of Joseph Smith; that is, subsequent to his death, in 1844, and down to 1852; I think some of them were before 1852. I would not be positive that some of them were not after 1852. Yes sir, I presume it is a fact that the Reorganized Church was about as weak or weaker than

some of the other organizations; I do not know that to be a fact, I state I presume it was; I do not know that it was a fact. I say again that I presume that is a fact as far as numbers are concerned. It was comparatively weak until 1860, but it was gathering strength all the time, however. At the time I became connected with it, I expect
152 there were probably three hundred (300) in the membership; I think that was about the number that were identified with it then; that was in 1860. There may have been more; I cannot say. There were some thousands belonging to it in 1870, we had built some church buildings; there were possibly five thousand (5,000) in 1870; there may have been more than that number, and there may not have been that many. If I had the statistics I could tell you just how many there were. Yes sir, I have stated that after the organization of what is now called the Reorganized Church, that quite a number of the adherents of other bodies came into the Reorganized Church. That is true of my own knowledge.

I say that the members of some of them came in, and a large proportion of them came in. These persons who came into the Reorgan-
153 ized Church, who were members of these different factions, who were baptized prior to my father's death, were received on their original baptism upon their request to be so received, and if they required rebaptism, they were rebaptized; but it was not required of them; if they desired they were received on their original baptism as members of the church.

Yes sir, I have stated that William B. Smith was one of the Twelve
155 in my father's day, he was ordained by the church that existed under my father's presidency, that was the Church of Jesus Christ of Latter Day Saints. I did not say that he went off with one of these factions;
156 I said that he had organized or helped organize a faction, claiming to represent the church. When he was received into the Reorganized Church his former ordination as an apostle was not recognized. He was received as a high priest. We received him as a high priest in the right of the body to direct in regard to its officers, and in a sense we recognized his former ordination. I do not know that William B. Smith was ever ordained an apostle; that is a matter of history I believe; I do not know what the history says.

According to the laws of the Reorganized Church, a man is ordained to the office of an apostle upon its appearing to the satisfac-
158 tion of the body that he is called to the office; then he is nominated and received by vote of the body, then ordained. We understand the call must be by revelation in some form. I could not tell you whether William B. Smith was so called. Yes, sir, that is my understanding of the law of the church, that a member must be called by revelation. That is the rule that is laid down in all the standard books both of the old original church and the Reorganized Church. If William B. Smith was so called by revelation to the office of an apostle in the old church, it would depend upon the conditions and

circumstances surrounding and attaching to the case whether the Reorganized Church would receive him in such office.

165 The position assumed by the Reorganized Church in 1852 is that it stands in the position or in relation to those who were members of the original church in 1844 and prior to that time that the Catholic Church does to its membership, though they may be scattered, and belong to other churches, yet the mother church never renounced its claim upon her children; we claimed they were in error, and we made an effort to redeem them, or I should say, an effort for their reclamation. We held that they were members of the old church and for that reason it was our duty and privilege to make this effort to reclaim them. I never heard anything other than that a Josephite was a monogamist.

Duly subscribed and sworn to, testimony having been read over by witness.

WILLIAM B. SMITH, of lawful age, being produced, sworn, and
166 examined on the part of the plaintiff, testified a follows, in chief:—

My full name is William B. Smith, my age eighty years; I was born in Royaltown, Vermont. I do not recollect that I lived there more than four or five years. My father's name was Joseph Smith. There were seven children in his family.

I belong to the Reorganized Church of Jesus Christ of Latter Day Saints at the present time. As near as I have any knowledge of the history of the church, it was reorganized in 1860 or '61, about those years.

The church of which this was a reorganization was founded in 1830 by my brother, Joseph Smith. I was a member of the original church; became identified with it in 1830, in the State of New York, at a place called Fayette. The church remained there as a body until 1831, when they removed to Kirtland, Ohio. There was a considerable number of that class of people at Kirtland at that time; that was in 1831. I remained at Kirtland from 1831 to 1837 or '38.

167 From Kirtland we came into the State of Missouri. Not all of the people that were identified with the church came to Missouri, but it was a pretty general movement. They came to Caldwell county to a place now called Far West. I at that time was recognized as one of the Twelve Apostles of that church; that was my official position. I occupied that official position up to the time of my brother's death, June 27, 1844. I mean the death of my brother Joseph, the president of the church.

After his death I considered that I still held the right of my apostleship and therefore continued to preach according to the doctrine that I had received. During that time my preaching was in the county of Lee, State of Illinois, at a place called Rocky Ford of the Inlet, probably eighty miles from Nauvoo; I went from Nauvoo to that place. There was no one went with me except Aaron Hook. He was an elder in the church also and an elder at the time of my

brother's death. I do not know how long he had held that position, but we recognized him as an elder in the church under the supposition, as I understood it, that he was regularly ordained to that position.

I suppose the reason why he was the only man that went with me was because about that time a separation had taken place between me and the balance of the Quorum of Twelve; opposition had sprung
168 up between me and them because of certain practices they were guilty of. I do not know that I could state the cause of the separation properly. Well, in substance, the reason of the separation was that the church I had absolved myself from had changed the doctrine in a manner that the teachings of the church did not justify, in respect to several things, and especially in respect to the marriage relation.

The first I ever noticed of the change in that regard was in 1845, at Nauvoo, Illinois; I refer to the practice of polygamy. The principal participants at that time were Brigham Young, Heber C. Kimball, John Taylor, Willard Richards, Orson Hyde, and Parley P. Pratt. They were the principal participants in that doctrine.

The church at that time and from 1832 had an officer known as a Bishop. His name in 1832 was Edward Partridge. I knew him personally; he lived at Kirtland, Ohio, when I did. From Kirtland, Ohio, he came to Jackson county, Missouri, in the year 1832, probably between '32 and '33.

The duties of the office of Bishop were to hold the treasures of the church and to have the same at his command to dispose of according to the direction of the church in conference. I think he held that position until the time of his death. I do not know when he died.
169 What caused him to come to Missouri was, he was authorized by the church at Kirtland, Ohio, after collections of money had been made for the purpose of coming here, into Jackson county, Missouri, to purchase land for the church, and especially to purchase a place for the temple lot. I call to mind that we enlisted a special number of the church to attend to the purchase of land for the church, and that the other parties interested in relation to money matters in connection with the church fund were Sidney Gilbert, N. K. Whitney, F. G. Williams, John Carl, William Marks, John Carter, Reynolds Cahoon, and Titus Billings.

These parties raised the funds that were lodged with the Bishop for the purpose of purchasing lands in Jackson county, Missouri. I was personally acquainted with these men. They were among the first members of the church. William Marks, at that time, held the office of High Priest. I don't know what office the other parties held, but they were the ones selected to gather the money together for the purpose of lodging it in the hands of Bishop Partridge to purchase this land in Jackson county, Missouri, and the Bishop afterwards did purchase the land. I did not come to Missouri until

sometime in 1837. I came then to Caldwell county; did not come to Jackson county.

170 William Marks moved from Nauvoo, Illinois, and settled in a section of country called Shabbona Grove, Illinois. I do not know how long he remained there. The next I heard of him after that was when he united with the Reorganized Church. I think he united with the church at Plano, Illinois, and I think it was in 1862 or in the neighborhood of that time, although he may have belonged to the Reorganized Church before that time; that is as early as I know anything about his connection with the Reorganized Church. He was a member of the church at the time of his death.

At the time of the reorganization of the church I was living in Lee county, Illinois, at a place called Rocky Ford of the Inlet. I had a following of about thirty members at that place. I became identified
171 with the Reorganized Church about sixteen years ago; I united with it at Plano, Illinois. The following I had, I turned them over, as far as I was concerned, into the hands of my nephew. My reason for doing that was because I recognized him as the legal head of the church, the legal President of the Church. I mean by that, the legal President of the Church of Jesus Christ of Latter Day Saints. When I say my nephew, I mean Joseph Smith, the man known by that name and the same party by that name who has been testifying in this case. There is no portion of that organization that was led by me now in existence; they all united with the reorganization excepting two men, and they are both dead.

I know the doctrine of the original church as taught by the church and by the elders; I am also familiar with the doctrines taught by the Reorganized Church of Jesus Christ of Latter Day Saints. I hold the position now of high priest in the Reorganized Church and held the office of an apostle in the old church. Holding these two positions, I have had the right to preach and baptize under the order
172 that I had received originally from the original church, and also under the order received from the Reorganized Church.

There were three or four propositions or doctrines that were introduced into the church after the death of my brother in June, 1844, under the council of a part of the Twelve. One point was—and it had never been taught previous to that time—that Adam was God, and also that Moses was a man-god. Another doctrine was that of "blood atonement," meaning that if a man disobeyed the propositions of that council, meaning the remaining Twelve, he had to pay for it by the forfeiture of his life and atone for the sin by the shedding of his own blood, or allowing it to be shed by others. That was blood atonement for you, and it had never been taught in the old church, nor had the Adam-God doctrine ever been taught in the old church. So they brought the matter down to the Adam-God doctrine, and the Moses-god doctrine, and finally these men that were left or composed the Twelve at that time brought in Joseph Smith as another god, one of their gods under the Adam-God doctrine and the blood-atone-

ment doctrine. Another point was the marriage question in regard to the plurality of wives that was taught after the death of Joseph and Hyrum Smith, my brothers. These new doctrines that I spoke of were what caused the separation between me and that body of people, and neither of them were taught previous to 1844 nor for some time after 1844.

The Reorganized Church of Jesus Christ of Latter Day Saints does not now and never did teach or hold to these doctrines. The branch of the Mormon Church that did teach these doctrines is what are called the Utah Mormons.

I was well acquainted with the doctrines of the original church from 1830 to 1844; that is, the doctrine that was taught in the
173 church. The doctrine of the Reorganized Church of Jesus Christ of Latter Day Saints is a perfect representation of the doctrine as taught by the original church founded in 1830. I have no knowledge whatever in relation to any difference in the doctrine taught by the Reorganized Church and that taught by the original church from 1830 down to 1844.

CROSS-EXAMINATION.

174 The name of the church of which I was a member before I came to Kirtland, Ohio, was called the Church of Christ. I first became a member in 1830, was baptized by Oliver Cowdery, in Seneca Lake; that was in the State of New York. I think I became an officer in the church in 1832. I was admitted then to what is known in the order of the church as a teacher. I was admitted or received into that office by being ordained and accepted into that office by the sanction of the church. The church at that time was called the Church of Christ. I refer to the year 1832 as the year I was ordained and received into the church as a teacher, at Kirtland, Ohio, at the time of the Annual Conference of the church.

At that time I should think there were probably three or four hundred members in the church. They were all members of the one organization. There wasn't any other organization of the same faith or order under the name of the Church of Christ.

There were other denominations in that section of country known as the Disciples, Methodists, Presbyterians, and other worshipers; but there was no other church organization acknowledged as the church in 1830.

About that time there was an organization headed by Mr. Brewster that claimed they were the appointed church, but I do not recollect that they attempted to come under the colors of the Church of Christ. This Church of Christ at Kirtland spread out in 1832 and had other
175 organizations or branches in other places that began before 1832.

It was during the seasons of '31 and '32 that elders who had received the faith were appointed to travel in different localities and parts of the country, and the result of these travels was that hundreds of individuals embraced the doctrine, which was recognized under the name of the Church of Christ. The number of organiza-

tions that were formed prior to 1835 was probably one thousand or fifteen hundred; I mean that many members, not that many different organizations.

The first conference of the church was held after its organization at Father Whitmer's, in Fayette county, New York, on the sixth of April, 1830. There was a conference held in Kirtland in 1832.

176 Persons are elected to office in the church when the members become satisfied that the individual is worthy of holding office in the same. It is generally signified by some means or another and the name of the person is placed before the conference, to be ordained to that office upon a recommendation as to his fitness for the place; or, in short, a person is elected to an office by the consent of the church through the means of the conference.

I was ordained teacher by one of the first members of the Quorum of Twelve, a man by the name of Luke Johnson, and John Whitney officiated at the ordination. I held the office of a teacher in the church about one year, then I was ordained a priest by Oliver Cowdery and John Whitmer, in the year 1833, at the time of the conference.

The conference was made up of persons occupying conspicuous positions in the church and lay representation. There were delegates sent up to the conference from different parts of the country. The conference was composed partially of delegates that were sent in from different sections of the country, and persons who were not only members, but who at the same time were holding offices that came to represent the different sections of the country in the conference where they resided. That is, they represented the different sections of the country where they variously lived. Lay delegates were allowed to take part in the conference by a vote of the conference. 177 Lay delegates in the conferences could make and second motions, and vote as any other delegates. They exercised the privilege of making motions the same as any other delegates or members of the conferences, who were members by reason of their official position; but they could not have done that unless they had been invited by a vote of the conference. They would not assume to take a position 178 of that kind if they were not invited, but being invited, they had the same right as other delegates.

I was appointed and ordained a high priest in 1835 by the authority of the conference setting me apart as a person worthy of the office of high priest. The conference then set me apart as a member of the Quorum of Twelve, and I was ordained a member of that quorum. I never was ordained to any office higher than that of a high priest, but I was appointed by the conference as an apostle. We hold in the articles or ordinances of our church that an elder is an apostle and especially is this so if he is a high priest; for then the nature of his office and position makes him an apostle. I was ordained a high priest by Sidney Rigdon and Martin Harris. I was called to that office by the first Presidency of the church then, the same as the

other members of the quorum, and we were appointed by that conference.

The date of the organization of the Twelve was April, 1835, that is, when they were appointed. The appointment was authorized, if I understand your question, by the conference, and the conference appointed persons who filled those offices. It was decided that the priesthood that was assembled there on that occasion, the First President, and the elders, and the high priests, might by their consent appoint certain parties to fill the offices of apostles. That was done and they made up the Quorum of Twelve, so called. I don't know that there was any other quorum authorized besides that at
179 that time. That is the only one that I remember anything about. When a member of the quorum died the place would be filled by the appointment of some one in the same manner that the person who died was appointed by the sanction of the church. There is only one Quorum of Twelve in the Reorganized Church.

There is a Quorum of High Priests, the Quorum of Seventies, and the Quorum of the First Presidency of the church, consisting of three persons.

I could not tell how many quorums there are in the Reorganized Church; I haven't counted them lately. Edward Partridge, the Bishop of the church, left Kirtland in 1832; that was before the Quorum of Twelve was organized. I think he returned to Kirtland afterwards, but could not say positively. I understand he is dead, but I do not know anything about when or where he died. I am not acquainted with his history after he came to Jackson county, Missouri. I never saw him after he left Kirtland to come to Missouri. He may have returned to Kirtland after 1832, and I would not have known anything of it. My mission was in the Eastern States, and of course I was where my work was.

I can name some individuals that I know gave Edward Partridge, the Bishop of the church, money before he came to Missouri, to help pay for the purchase of the land for the church. My father gave him some money, N. K. Whitney gave him some—I could not say how much—and Sidney Gilbert. There may have been others that I personally knew at the time that I don't call to mind now.

The general understanding and report to the church of the facts
180 concerning the amount of money that was raised by the committee that was appointed show that there was contributed for the purpose of purchasing the land, quite a sum of money, the exact sum of course I can't remember. I know that Edward Partridge came west for the purpose of purchasing land for the church and that the land was purchased. My recollection is that the amount of money that was called for to purchase land for the church was something like three thousand dollars, and my understanding is and was that the amount called for was paid in in 1832. I don't know whether any persons except members of the church at Kirtland contributed or not.

William Marks also contributed to the fund for the purchase of the

land, and it has always been my understanding that for the amount of money he contributed for the benefit of the church and purchase of land here in Jackson county that he got a deed to the temple in Kirtland. That was placed in his hands to secure him for the money he had placed in the hands of the Bishop to purchase land in this country. Mr. Marks was a member of the church; he would not have been in this land deal if he had not been. He was also an officer in the church. For the money Mr. Marks advanced, he had a
181 title to the Kirtland temple in his own name, to secure its repayment. That was done on account of the debt which the church owed to him.

The title of the temple property in Kirtland was put in the name of William Marks to secure him for a part of the money that was sent out into Missouri for the purpose of purchasing this land for the temple, and the purchase of a printing press for the printing of-
182 fice, and material of that kind for the printing establishment. Of course I didn't see all the money paid over, but then, you know, Col. Southern, that there are a great many things we know that we do not see, and yet we know it just as well as any other fact we have seen. If the people of Independence should contribute fifty thousand dollars to send to feed the Russian poor, and you had never seen one cent of the money that was contributed, or a barrel of the flour of all that was contributed, would it follow that you would conclude that Jackson county had not contributed that amount? I did not go
183 around individually to the members who made the contributions and ask particular amounts each one paid in order to see every fifty cent piece that was paid out, but I know that the amount called for was contributed. I couldn't say to the dollar how much it was, but at all events it was enough for Edward Partridge to come west and purchase this land in Jackson county.

I don't know whether Edward Partridge ever made any report to the church at Kirtland of how much money he received, or how much land he purchased; I suppose he did, but if he did, I have forgotten it as a matter of memory. I don't know that he reported to any body of the church as to his mission of purchase in Jackson county; I don't know that he lived here long enough to make a report. By the time they got the printing press and establishment, the people here in Missouri were driving Partridge out of the country. That is about as I recollect the history of the matter, and I don't recollect what Partridge's movements were after that. He was sent out to purchase this land.

At that early history of the church, I do not think any appointments were made in regard to districting the country; do not know any arrangements in regard to that. The church was comparatively weak to what it was afterwards, and it was not necessary to do so; in other words, the proper stage in the growth of the church had not arrived which rendered it necessary to district the country or divide the church off into districts. The proposition for districting came
84 up before the conference at Nauvoo in 1841 or '42. That was a propo-

sition to district the United States, placing it under the direction of certain presiding officers. That arrangement had not as yet been completed or perfected at the time of the death of Joseph Smith, and it was never completed. Joseph Smith died before that districting took place. I don't know that it has ever been districted since the death of Joseph Smith unless it has been districted under the Reorganization, or under the organization of the Reorganized Church as district presidents. The plan of appointing quorums of seventies came in in 1835. The subject was suggested at the time of the organization of the Quorum of Twelve. The plan was never perfected in the days of my brother Joseph. I think it was perfected in the
185 Reorganized Church, if I am not mistaken concerning its history. I remained in Nauvoo after the death of my brother until 1845,—three or four months in 1845.

I never, prior to the death of my brother, or subsequent to his death, taught or preached the doctrine of polygamy. I never did at any time or any place preach the doctrine of polygamy, and any history that states that I did teach the doctrine of polygamy, if any does state it, is false.

My first labors as a minister after I left Nauvoo were in Lee county, Illinois, in the year 1845. I was in Nauvoo from about the twenty-fifth day of May until the last of October, that would be about four months. My brother Joseph was killed in 1844. I was not living at Nauvoo at the time of his death; I was living in the State of New York. I returned to Nauvoo after his death in the month of May, 1845, and remained until the latter part of October.

I left Nauvoo in 1845 because my life was in danger if I remained there, because of my objections and protests against the doctrine of
186 blood atonement and other new doctrines that were brought into the church. After I left I published an account of my separation from the church and the causes which led up to it. I think it occupied sixteen pages. It gave the cause of my separation from the church, and contained a statement of the apostasy of the leaders of the church at Nauvoo. I had five hundred of these pamphlets struck off. The original copy of the pamphlet or statement can be found now on the files of the *St. Louis Republican* and on the files of the *Warsaw Signal*. I haven't a copy of it myself.

After that, I followed lecturing several months in different parts of the country, in Cincinnati, St. Louis, Philadelphia, New York, Boston, and other places where I had ministered before the death of my brother. I went where I had been successful in making converts to the faith prior to his death. I gave lectures in these places explaining the cause of separation between me and that part under the leadership of Brigham Young. After this I immediately proceeded to organize a branch of the church, I mean the Church of Christ as organized in 1830. The church I organized, by vote of its conference, appointed me as the president of the organization. That appointment was after 1844. Of course the church referred to as having

elected me as its president was the one I organized myself after I
87 had left Nauvoo. It was called the Church of Christ. That was the first name the church received in 1830 and I suppose it was sanctioned by my brother, who was the president of the church. Now the name of the "Church of Christ" was occasionally used or called the "Church of Jesus Christ" or the "Church of Jesus Christ of Latter Day Saints," but as a general thing it was called the Church of Christ in so far as my connection was concerned. The church to which my brother belonged at the time he was killed was called the Church of Jesus Christ of Latter Day Saints and the one that I organized was invariably called the Church of Christ.

I have stated that the title or name of the church at the time of its organization in 1830 was the Church of Christ, that was the first name. Then about 1835 there was a change made in the name of the church; it was called the Church of Jesus Christ of Latter Day Saints, that was the name of the church after the change was made. By making an explanation, I think you will probably understand what I mean. We, as a class of people, believed that we were living in what was called the last days, and the term *Latter Day Saints* seemed to be a sort of a tribute to that in relation to the confession of our faith in the doctrine as we held it at that time, and as a natural consequence that addition to the name of the church did not come any later than in 1834; believing as we did that we were living in the last days, and it was suggested by that fact, and the idea that persons who obeyed the gospel became saints of latter days, not of
188 former days. The term, *Latter Day Saints* was always associated or connected with the articles of faith. I know that was the idea we had, and that was why the title came to be added to the church.

I think there was a revelation about 1835 or '38; no, it was about 1834, on the question of the title of the church. That title was the Church of Jesus Christ of Latter Day Saints. There was also a revelation given on tithes. I cannot state when it was given. I mean in the old church. I went to Far West, Missouri, and I think it must have been in 1837. I went for the purpose of settling there. I purchased land there. There was a body of my people there. I should think there were about twelve hundred families, many of them from the Eastern and Northern States. I am not aware that
89 there were any of them from Nauvoo. Nauvoo did not have an existence at that time; I mean, so far as there being such a place as Nauvoo in the connection of any Mormon dispensation. It did not have any existence in 1837. I don't remember whether the revelation regarding tithing was given while we were at Far West, or not, cannot say. I know that there was such a revelation; that the rule of tithes and offerings was a law of the old church. They commenced to practice it, but did not practice it very extensively. It seemed to be a matter that sprung up all at once and did not become very generally known.

It is a law that is practically recognized in the Reorganized

Church; they have it in operation in the Reorganized Church. That revelation upon tithing was generally accepted by the old church.

I was at Nauvoo in 1841. I think my brother Joseph had a revelation in relation to building the temple and in regard to church officers. [Witness here reads from Exhibit J, page three hundred thirteen, entitled "Book of Doctrine and Covenants" as follows, in answer to the question of Col. Southern]: "I give unto you, my servant Brigham Young, to be a president over the twelve traveling council, which twelve hold the keys to open up the authority of my kingdom upon the four corners of the earth, and after that to send my word to every creature; they are: Heber C. Kimball, Parley P. Pratt, Orson Pratt, Orson Hyde, William Smith, John Taylor, John E. Page, Wilford Woodruff, Willard Richards, George A. Smith. David Patten, I have taken unto myself; behold, his priesthod no man taketh from him; but verily I say unto you, another may be appointed unto the same calling." I recognize that as a revelation
190 delivered about that time; it is in the Book of Doctrine and Covenants.

I consider my appointment as one of the Twelve to extend during my whole life from the time of my appointment. There was a time prior to 1844 that the original church practiced the doctrine of baptism for the dead. They did at one time, but it did not continue very long. There was a time when there was a doctrine of that kind taught and practiced. I think it must have been somewhere about
191 1839 to '41, as near as I can remember, but the teaching and practicing of that doctrine was abandoned before the death of my brother in 1844; but how long, I cannot say. It was abandoned because of a revelation which was given specifically mentioning it, that it was not to be resumed until after the building of the temple I think. The doctrine of baptism for the dead has never been practiced or taught in the Reorganized Church of Jesus Christ of Latter Day Saints to which I now belong.

I never heard the doctrine of the plurality of Gods taught prior to the death of my brother Joseph Smith. I was not in Nauvoo when my brother was killed. I left there in 1841 and did not return until 1845, except once on a visit between 1841 and '45. I was there a couple of weeks before my brother's death, attending a council that was being held in the first part of June; that was June 1844. That was the council of the Twelve, so called. The subject discussed at that council meeting was, as I recollect it, over the propriety of appointing certain men presidents of certain districts, but they did not do it at that time, and never did in the old church.

192 At the meeting of that council, in June, 1844, I did not receive any ordination as the successor of my brother, and I have never made any such claim directly. Answering indirectly, I held the view that in case the legal successor, as I saw it, never came forward himself to occupy that place, that I held sufficient claim under my apostleship to be properly the legal successor of my brother, Joseph, in

case that position was never held at the time by persons who at that
193 time were legally entitled to that position. I had never been qualified with the functions of that office.

My brother never attempted to confer that authority on me any further than the ordination and confirmation as an apostle, and that would not give me any priority over any other person holding the
194 same office I held. What I wanted to say, so far as the term *priority* is concerned, there was a vote taken in the Council of Twelve that the oldest man in that quorum should have the right to preside over that quorum and act as chairman in all business transactions. That was a privilege that was accorded to the oldest man amongst us out of respect to his age. That is all there is to priority.

I know, and during his lifetime did know, an elder by the name of
195 Zenas H. Gurley, and I knew Jason W. Briggs. At one time Mr. Briggs acknowledged the organization that I had effected after my brother's death for a short time. He became dissatisfied with my organization for the reason he considered the legal succession somewhere else, thought I did not exactly fill the bill, and he with others went back on my succession and assumed another succession.

Mr. Briggs claimed that the legal succession did not come from me from the fact that there was a more authoritative succession, the right by heirship, the right of inheritance, because in the succession of the priesthood there was a law that the priesthood was handed down from father to son. But I did not stand exactly in that relation, and because he denied my authority as successor, he was cut off from the church I had organized.

W. W. Blair now holds in the Reorganized Church of Jesus Christ
196 of Latter Day Saints the office of counsellor to the President. He is not acknowledged as a president of the church, he is simply one of the counselors of the President and member of the Quorum of the First Presidency. The church that I organized myself became disorganized a short time before the reorganization of the church that took place at Amboy in 1860. A short time previous to that reorganization the body of Saints that I had reorganized and kept together occupied their position until it was known that my nephew, Joseph Smith, had come forward and had taken his place as the head of the reorganization and it was understood he was the legal successor of his father to the office that his father held; I never made any attempt after that to try and reorganize.

I had already determined that the legal succession to the presidency lay in the family of Joseph Smith in succession, and that I held the
198 authority that I was exercising under my ordination as an apostle under the consideration, that in case my nephew never came forward to take that place, I considered that I would have a right by virtue of the law of inheritance, and the right to keep the succession in that family, and exercise supremacy over the priesthood, and still endeavor to retain the organization of the church as it was in 1830; and as soon as my nephew came forward and took his place, as I had

understood the doctrine to be that it was his right to be the successor
199 of his father, I gave up all my claims to that right that I would otherwise, had he not come forward, insisted upon holding. That is the way it was, and it stands right there, and has ever since in that organization.

200 One of my brother Hyrum Smith's sons holds the office of patriarch in the Utah Church. The old church that was established and organized under the direction of my brother, Joseph, was not a kingly government. It was not such a government as taught that
201 successorship would descend to the oldest son of the office that the father held, no further than the doctrine of succession was generally taught and understood as applying to all offices of that nature.

The doctrine of successorship was generally taught by the ministry of the church. They were the only authorized teachers, and it was generally understood in the church as taught by them. I think the doctrine that was taught by them is exemplified in the Book of Covenants, where it says, "This priesthood was confirmed to be handed down from father to son," and the law says in the book we are governed by, "Ye are lawful heirs according to the flesh." That is what the law says, and consequently that is why I surrendered all the claim which I had assumed or professed to have received, as soon as my nephew came forward to assume the position which I had previously acknowledged to be his according to his natural right as the legal successor of his father. I have tried to explain as best I could. Of course there are a great many of these things that have to be explained, and I do not know how I have succeeded, but I have done the best I could.

Individually, I have no claim or interest in the property in controversy in this action any further than the interest I have in it as a member of the church to which I think it rightfully and lawfully belongs, and I hold that interest in general with the church to which I belong. Of course, as a member of the church, I claim to have a right to the lot in common with the rest of the church, and that claim is made because the lot was purchased with the property or money that was collected in the church for that very purpose during the time that I was a member of the church in 1832 and '33.

I know of my own knowledge that a man was appointed for the
202 purpose of purchasing the property in controversy. The money was collected and placed or deposited in his hands, and he was sent out into this county to purchase land, and he did purchase it. Now these are facts that I know as well as I know anything; but still it is a fact that I did not see the money paid over, nor did I see him when he purchased the land; but it is here and shows for itself that he did purchase it.

It was not a mere rumor that the money was used in purchasing this land. It was a matter of general conversation and knowledge. It was bought with money that was contributed, too, when I was a member of the church. I did not personally pay any.

I can't say that I knew Austin Cowles. The name sounds familiar. I think I became acquainted with Austin Cowles in Kirtland. I have an indistinct recollection or memory of knowing a man there by that name. Did not know him at Nauvoo. It might have been at Nauvoo, but I think it was at Kirtland where I knew him. William
203 Marks I knew intimately. The others I did not know intimately. I have no recollection of any item of doctrine of the church during the time of my brother that they were commanded not to publish. There was no such doctrine. [To refresh the recollection of the witness, the counsel reads from the Book of Doctrine and Covenants, Exhibit J, page 101, as follows: "And I command you that you preach naught but repentance, and show not these things unto the world until it is wisdom in me."] Witness: Well, I have read that thing, and seen it a thousand times before; but this is the first time I have ever heard it insinuated that there was anything secret about it. I never understood that there was anything secret about it before, or that anything secret could arise from it.

REDIRECT EXAMINATION.

205 I meant when I said that the church was looking forward to an endowment, that it was an additional outpouring of spiritual blessings through the measure of their industry and sacrifice incurred and undergone on account of the building of the temple. That was recognized as an endowment, simply an outpouring of the Spirit, showing that those performing the work would be blessed by the Spirit as a reward for the industry and sacrifice that marked its erection. It was simply an outpouring of the Spirit, the same as on the day of Pentecost, something similar, something that was generally expected and talked of. That would probably be the application of what was meant by the endowment.

206 I claim that I still hold the office of an apostle on the ground that the priesthood so held in our church is an everlasting principle that has been handed down through all time, from Adam down to the days of Moses, and from Moses to Christ. The ordained authority of the priesthood is everlasting, or lasts through life, and I held that I had been ordained an apostle of the church, in the days of Joseph as an apostle, and my ordination in relation to that I held conferred upon me that priesthood which is represented by Paul in Hebrews as being "without father and without mother, and without descent." It is an eternal principle handed down by God through his apostles and disciples, and who are ordained thereby, and I consider that I still hold, under the rule, ordination to that office.

I do not hold any office of apostle in that respect under the Reorganized Church, for I have never been invited by the Reorganized Church to that position, neither have I asked them to accept me to
207 that position. I understand that in the reorganization of the church, it was simply not with the idea of the introduction of any new doc-

trines to be organized into the church as a part thereof, or as a part of its doctrine, but simply as a transmission of the old doctrine that was taught in the old church in 1830 and keeping it in the reorganization. I understand that the idea of the reorganization was simply to collect together that kind of doctrine or matter and the scattered elements of the old church, and bring them back again into the fold, and restore the old church through the medium of this reorganization, to the same condition it was in before the disruption; in other words, to simply fill up the break that was caused by the death of Joseph Smith and the disruption of the church that followed that event and the reuniting of the scattered fragments of the church that still adhered to the doctrine of the old church as taught in 1830 down to 1844.

My understanding of the law of the church, both of the original and the Reorganized Church, is that the priesthood descends from father to son; it descends to the eldest son. My understanding of the law is that if the legal heir in succession had no fitness for that office, or should apostatize, the highest authority in the church at that time would have the right to take control of the management of the
208 church. If the legitimate heir was an idiot, I should not consider that he had a right or was a fit subject to govern or preside over the church. I would consider also that the apostasy of the father would of course destroy the right of the son by inheritance to the office, or to succession.

209 I stated that the reason of the breakup in my organization was that these parties who had forsaken my organization found that there was another claim that was entirely superior to my claim, that some one else had a claim superior to mine. That claim was, as they publicly stated, the claim of the right of young Joseph Smith as they called it, and they based that claim on the ground that he was the oldest son of my brother Joseph, the first president of the original church, and he was entitled to the presidency of the church by right of inheritance; and I recognized that claim as soon as he asserted it publicly. That is the present president of the Reorganized Church.

210 I recollect when the name of the church was changed. The name
2(was changed from the "Church of Christ," and the church was denominated "The Church of Jesus Christ of Latter Day Saints," in 1834, and the circumstances surrounding the change of name were, the walls of a temple had been put up in Kirtland, Ohio, and the matter was talked over in regard to a change of the name, or as to what inscription should be placed on that temple, and of course when this subject was being talked over in regard to the inscription to be placed on the temple, it was said the name was to be called "The Church of Jesus Christ of Latter Day Saints," and that was the inscription placed on the temple in 1834. That was the first knowledge I had of the matter in relation to the title of the church. After that it was entitled "The Church of Jesus Christ of Latter

I was at one time a member of the legislature of the State of Illi-
211 nois, representative from Hancock county. From 1860 to '65, I was serving in the army as a soldier from the State of Illinois.

RECROSS-EXAMINATION.

The Salt Lake Church claims the same name that was adopted by
212 the original church in 1834. I was present at Kirtland at the time of the endowment of which I have previously testified. The endowment consisted of prayer meetings, prayers, testimonies given, individual experiences, and ceremonies of that kind. I don't know that there was any anointing connected with it; if there was, I do not
213 recollect about it. I have not learned that the Reorganized Church practiced the ordinance of the washing of feet. I have understood that the subject is under consideration by the Reorganized Church, and that it is to be adopted at some time in the future when that ordinance will be resumed.

214 Young Joseph Smith, the president of the Reorganized Church is the oldest son of Joseph Smith, his father, I so understand it. Joseph Smith, my brother, was not the oldest son of my father; Hyrum was the oldest son. He was older than Joseph was, five years older than I.

I am sure the inscription was placed on the temple at Kirtland in 1834. Yes, sir, I am sure of that. The church was nominally at one time known as "The Church of Latter Day Saints," that is in common conversation among ourselves, we would speak of it as the
215 Church of Latter Day Saints. But when any person asked us what the title of the church was, we would tell him it was "The Church of Jesus Christ of Latter Day Saints." It was never known officially as the Church of Latter Day Saints.

The right to reorganize certainly arises out of an especial principle
216 of law, for in the government of all matters which through any cause or from any reason become dissolved by the influence of destructive elements, whether temporally or otherwise, as a natural consequence there should be a resurrection or gathering together of the scattered elements into one body. In that case, it seems eminently proper that the title of the reorganized body should state the fact that it is a reorganization. There is no other organization of that old church organized in 1830 which is known as the Reorganized Church of Jesus Christ of Latter Day Saints. There was when I had a church; but mine was not a true succession from the old
217 church. I organized it to save the doctrine of the old church from disruption, and to save many of the people from apostasy and things of that kind that led to heresies. I picked up some of the fragments of the old church. My church as long as it existed was as much entitled to be called the "Reorganized Church" as the present reorganization. I started in to save as many as I could, and have been picking up fragments ever since.

Day Saints," and the church was know by that title up to the time of Joseph Smith's death.

AGREEMENT.

218 It is agreed by counsel for complainant and for the defendant that the property in litigation is in excess of five thousand dollars.

---

219 J. W. BRACKENBURY, being produced, sworn, and examined on the part of the plaintiff, testified as follows:—

DIRECT EXAMINATION.

I live at Independence, Missouri. Was born on the twelfth day of August, 1829. Before going to Independence, I lived in Kansas, and prior to that in California. I never lived in Salt Lake City nor in the Territory; I was there for a while. I lived at Nauvoo, Illinois; I never lived at Kirtland, Ohio. I lived in Ohio a little while; was born in Ohio. I went to Nauvoo, Illinois, in the spring of 1840; left there in 1846. Went to Salt Lake City in the spring of 1855, lived there until the spring of 1857, came back to the States again, and went back to Salt Lake in the spring of '58, and from there through to California.

220 I was at Nauvoo at the time of the building of the temple. It never was completed. I was acquainted with the publication of what is known as the *Journal of Discourses* while I was living in Utah Territory. Afterwards I became better acquainted with them. At the time I lived in Salt Lake City, I belonged to the Reorganized Church. The book that is now handed me is the *Journal of Discourses* partially, an authorized publication by the Utah Church; all of it is not here. I am acquainted with this publication; I have read it considerably.

The title page of the book identified by the witness is hereupon offered in evidence by the plaintiff, marked Exhibit One, to identify the book so as to introduce parts afterwards, reading as follows: "A Journal of Discourses given by Brigham Young, President of the Church of Jesus Christ of Latter Day Saints, his two counselors, the Twelve Apostles, and others; reported by G. D. Watt, and humbly dedicated to the Latter Day Saints in all the world. Volume I. Liverpool: Published by F. D. and S. W. Richards, 15, Wilton street, London. Latter Day Saints' Book Depot, 35, Jewin street, City. 1854."

CROSS-EXAMINATION.

The last time I was at Nauvoo was in 1850. I was back there on a visit. I have not been there since. The reason I know the temple was never completed, I have been to the temple perhaps twenty times and I have been over it from top to bottom time and again. I know it was not completed because it was burned down a short time after I was there. The time I refer to is prior to 1850. If it has been finished since, I don't know anything about it. It was burned
221 down before that time. I was there in 1844; was in the temple in 1844. I was there from the very time the temple was started, but

not all the time. Was there every few days. Saw it in process of erection from the start. I never saw the ceremony of baptism for the dead performed there. No sir, I did not.

W. W. BLAIR, of lawful age being produced, sworn, and examined on the part of the plaintiff, testified as follows, in chief:—

My name is W. W. Blair. I live at the present time at Lamoni, Iowa; have lived there since August, 1884. I am one of the editors of the *Saints' Herald*, and, ministerially, I am counselor to Joseph Smith. Joseph Smith is the President of the Reorganized Church of Jesus Christ of Latter Day Saints.

I have been connected with the church formally since the spring of 1857. I mean that I united with the church in 1857, that is, became a member of the church at that time. I was ordained an elder at that time by Zenas H. Gurley and others. For some time after 1857, I did not take any very active part in affairs of the church except at the time of conferences. I did some ministerial work in the church, not a great deal however, until the spring of 1859. At that time, I became a member of the Quorum of Twelve. I think it was in the fall previous that I received my ordination, however.

I became an active member of the ministry and in the Quorum of Twelve from the month of April, 1857, and continued right along in ministerial work in the States of Wisconsin, Iowa, Illinois, and the eastern part of Nebraska during that year. Afterward I passed across on a mission through Northern Illinois, Indiana, Ohio, Pennsylvania, and West Virginia, and so continued during a number of years engaged in ministerial work in the Eastern, Western, and Middle States. After that I took a mission through the intermountain country, Utah, Idaho, Wyoming, Montana, Nevada, and California, and so continued till 1873. At the Spring Conference of 1873 I
222 was selected as one of the First Presidency, and have been identified with the work of the church in that capacity ever since that time.

I have attended the general gatherings of the church since 1857, pretty generally, but not all of them. During part of that time I was in the West and did not attend some of the conferences from 1857 to 1860. I was with the church at its General Conferences spring and fall with few exceptions. I was present at the General Conference of the church in 1860, at which Joseph Smith was ordained President of the Church. The details of that conference with respect to Joseph Smith's nomination and ordination were, he came to the conference on the fifth of April, 1860, and on the sixth, at the organization of the conference, Elder Zenas H. Gurley, Sr., was chosen presiding officer.

It was known that Mr. Smith was present and wanted to address the body of the people present. He was invited to do so, and made an address, and in that address stated that for years past his mind had been enlightened in respect to the work of the church, and that

it had been signified to him that he should become identified with the church. He also stated that he had been solicited by various factions of the church to unite with them as the presiding officer over their respective organizations, but had declined doing it, saying at the time that he answered one and all that he never would have anything to do with the work of the church, and especially with the work of the Presidency, unless he was conscious in his own heart that he was called of God for that purpose. The very words he used I think are found in the address he had printed, or I should say, in his address as printed and are, "unless" he "should receive a call from" his "heavenly Father." I think those were the words he used in expressing himself.

223 At the close of the address, a motion was made that he should be received into the church to be its President, and the motion was seconded, put to the meeting, and passed. Then he was ordained to the High Priesthood.

He was ordained to the office of High Priest by the usual formula of ordination under the hands of William Marks, Zenas H. Gurley, and myself. The ordination ceremony used by us at that time was the regular ceremony used in ordinations as I understood it to be, but as to the exact words that were used in the process of conferring ordination, I could not say. I would not undertake to say as to the wording of the ordination for I do not remember it, that is, to give the exact language that was uttered, but the usual formula peculiar to the church in ordinations was followed.

The ordination was in conformity with the rule laid down in the Book of Doctrine and Covenants. We made that a rule in our faith and practice. That was a rule adopted in the beginning when I first became identified with the church; in fact, from the time we first came together and effected a reorganization; and everything that I had seen done was strictly in accordance with the law and the rules of the church. I would not say whether the President of the Conference at the time of Joseph Smith's ordination had a Book of Doctrine and Covenants in his hands. We were familiar with the Book of Doctrine and Covenants at that time, for it had been a question with us, and a very serious question, as to the government of the church up to that time. We understood that the Utah people and other factions of the church had gone on at will and paid but little attention or respect to the formulas of the church, that is, to the law and order of the church, and as a consequence we made a specialty from the time of my first acquaintance with the Reorganized Church in having everything done in strict conformity to the laws, and established rules, and formulas of the church.

At the time of the ordination, I held the office of an apostle, and at the time of the ordination I supposed that the ceremony amounted to the ordination of Joseph Smith to the apostleship. I supposed it comprised that, but I do not remember at that time what words were uttered. I could not say whether the words were uttered or not, but

the ceremony that was performed, we all understood it at that time that it was included. That was the understanding and intention, that he was ordained strictly in accordance with the rules and usages of the church as laid down in the Book of Doctrine and Covenants.

224 I am acquainted with the doctrines, teachings, and tenets of the original church as laid down in the history, and standard works, and books of the church. I have had occasion to study them pretty thoroughly and critically from 1851 to 1860, and I am also familar with the doctrine, teachings, and tenets of the Reorganized Church.

As to the difference between the doctrines of the original church and the Reorganized Church of Jesus Christ of Latter Day Saints as contained in the standard books of the church, we have claimed and now claim that the Reorganized Church has the same doctrine and teachings, tenets, and rules identical. We claim that they are identical in the Reorganized Church with the doctrines taught in the original church.

The position of the original church on the question of baptism for the dead is, as I understand it from the teaching of the Book of Doctrine and Covenants and the church history, was one had in the church books. I find an article in the church organ advocating it, but whether it had ever become a pronounced doctrine, that is, whether it had become an accepted formula at any time, I cannot say from my reading. The revelation of 1841 contained in the Book of Doctrine and Covenants provides for the baptism for the dead, and that of course was accepted by the church and formed a part of the revelation accepted as a rule of faith and practice from 1841 down. That is found in all the editions published after that date, and formed of course a part of the faith and practice of the church from that time on.

The same principle that is set forth in the New Testament in relation to the baptism for the dead, as I understand it from reading the New Testament, and the Book of Doctrine and Covenants, and in the various articles we find in the church organ, is identical with what is set forth in the fifteenth chapter of First Corinthians in the New Testament, and in the General Epistle of Peter, speaking of Christ

225 preaching "to the spirits of the dead." Indeed those passages of Scripture were quoted in many of the articles in the church organ, and we find them in the *Times and Seasons*, which was also a church publication.

The position of the Reorganized Church with reference to the question of baptism for the dead as a principle of faith is this; we have adopted from the start the Book of Doctrine and Covenants; and the various issues or editions of that book printed and published at Nauvoo; and as I have before stated, they embraced this doctrine of baptism for the dead, both in the letters by President Joseph Smith, and in the revelation given in 1841, likewise in what is called "the vision." It is provided there, preaching to the spirits in prison,

which involves, as I understand it, the administration of baptism for the dead. There is another revelation in the Book of Covenants that contemplates the same thing.

So far as the Reorganized Church is concerned, the question of baptism for the dead is a mooted question; that is, it has been ruled out from the present teachings and practices of the church for the reason that there is no authority for administering it, or in relation to the administration of it. We hold and so understand the teaching of it, that it can never be administered unless it is by especial and
226 direct commandment, and unless provisions are made for its administration by special commandment; and we do not understand that that has been given. To make my answer more definite: The Reorganized Church believes that the soul of man is conscious after death, and possessing the will power peculiar to the mind in this life, and that in that condition the gospel may be preached, the redemptive plan in Christ, and they are left at will to accept or reject; and that when they accept that plan of redemption in Christ Jesus, we claim that baptism for the dead is proper, and that other persons, by substitution, can receive the outward ordinance for the benefit of those who have passed into the spirit state. That is the way we understand it. The Reorganized Church does not teach or practice the baptism for the dead at the present time, and never have, to my knowledge, simply because it is impracticable under the present conditions.

Exhibit number two, being the Latter Day Saints' *Messsenger and Advocate*, was printed and published at Kirtland, Ohio, in 1834 to 1836 inclusive. The Reorganized Church understands that it was the authorized publication of the original church and has always so held it. On the question of the name of the church, about which I am interrogated, it is recorded, Exhibit Two, the name is interchangeably used, that is to say, "The Church of Christ," "The Church of Latter Day Saints," "The Church of the Latter Day Saints," "The Church of Jesus Christ of Latter Day Saints;" and I think one or two other forms are used perhaps, so far as the mere verbiage of the title is concerned. On April 3, 1835, on page 101, it is denominated "The Church of Latter Day Saints," and the same form of designation occurs on page one hundred and twenty-two, "The Church of the Latter Day Saints." The definitive article *the* occurs in that designation of the name. On page 206, the form is used interchangeably; in one column the Church of Christ of Latter Day Saints, and in the opposite column of the same page, the Church of Latter Day Saints. The date of Exhibit Two is March, 1836. On page 335, Exhibit Two, a record is made of the names of the ministry, and the form here used is "The Church of the Latter Day Saints." That reference is made in respect to the issuance of licenses, and on page
227 359 the form used is "The Church of Latter Day Saints." I believe those are all the times the name occurs in the publication. The book, Exhibit number Two, from which I have just been reading, is

the same book that was identified in this case, and is the *Messenger and Advocate.*

I am acquainted with the doctrine and teachings of the faction of the church known as the Salt Lake Church. I am acquainted with their doctrine and teachings as published, and as I have heard them preached from the stand by leaders of the church. I have also examined the claims or pretensions of other factions of the original church; those denominated "Strangites," "Bickertonites," "Hedrickites," "Rigdonites," and possibly some others; but these I have
228 investigated. The doctrines, teachings, tenets, and practices of the Salt Lake Mormon Church, commonly called the Utah Church, are not in harmony with the doctrine, teachings, and tenets of the original Church of Jesus Christ of Latter Day Saints. Some of the differences are, the Utah Church teaches the doctrine of plural marriage contrary to the doctrine of the original church and the Reorganized Church, as contained in their organs; that is to say, in the *Times and Seasons*, the *Evening and Morning Star*, and the *Messenger and Advocate*, and also contrary to the teachings of the Book of Mormon, contrary to the Book of Doctrine and Covenants, and contrary to our construction of the Bible, or rather, what we understand to be the teachings of the Bible.

Another difference is the Utah Mormons or Church through the President of their church as we find recorded in the *Deseret News*, one of their church publications, and in the *Journal of Discourses*, teach the doctrine that Adam was our father and our God and the only God with whom we had to do; and this teaching we regard as being rankly heretical and contrary to all the teachings of the Bible, the Book of Mormon, the Book of Covenants, and also the teachings set forth in these church organs in their time; also in respect to church government.

The Utah Church assumed in 1844, at the death of Joseph Smith, that the Twelve constituted and took the place of the First Presidency and assumed to dictate as to the First Presidency and in the stead or place of the First Presidency and also assumed that there would be no further First Presidency for the church and also that all of the authority, rights, and powers that appertained to the First Presidency became vested in them.

In the teachings of the Book of Covenants, the Quorum of Twelve and the First Presidency are distinct and separate,—the Quorum of Twelve to officiate under the direction of the First Presidency, or the immediate counsel of the First Presidency, and their ministerial labors are pertaining to the work of the church among the branches and in the various parts of the world. They had no authority to interfere in the affairs at the Stakes, had no right, no presidency there and in the High Councils that were held in the church.

The Reorganized Church regards that action of the Utah Church as a usurpation of authority, which begun immediately after the

death of Joseph Smith in 1844 and we also claim that in respect to the Bishopric, their dealings, dominating, if you please, the Bishopric, appointing and ordaining bishops and controlling the financial concerns of the church was an evidence of usurpation, or rather, one distinctive feature of their usurpation.

229 One other difference: The Utah Church claims that marriages not performed by their ministry are not strictly proper marriages, and they have used that influence to prevent marriages occurring except under the direction and administration of their ministry, going, indeed, so far as to absolutely prohibit it.

The manner of transacting business adopted by the Utah Church in their conferences, in so far as I am acquainted with it, is a system of suggestion on the part of the leading men of the church and the people are asked to sustain those suggestions by vote,—the nominations are always, so far as I have been able to discover, presented by the leading men and then the people are asked to sustain them by their vote. The Reorganized Church regards that practice as a sort of machine instruction with all the matters provided for beforehand.

I was present at a conference held in Wisconsin in 1857. If my memory serves me right, it was held in the fall of 1857. At that meeting or conference, Granville Hedrick and Mr. Owens were present and the hand of fellowship was extended to them. The minutes
230 of that conference show this fact. I do not remember Mr. Owens' first name. It occurs to me it was William, but I would not be positive. He was quite an elderly man and I never met him but twice. I met Granville Hedrick first in Woodford county and afterwards I met him at Washburne. Mr. Hedrick resided there at Washburne or near there at the time. He rode with me in a carriage from Amboy to Blanchardville in the fall of 1857, a distance of about ninety miles. He took part in the conference at that time. Both he and Mr. Owens took part. The hand of fellowship was extended to them and Mr. Hedrick moved a resolution, which was seconded by Mr. Owens to the effect that the conference send a delegation to Bloomington and Mackinaw, Illinois, and other points near there where they had some membership of their organization.

They had a temporary organization only as I understand. The conference was requested to appoint a committee to visit these people, reason and talk with them and preach to the people at these places and explain to them our views in regard to church doctrine and church government, and I well remember an expression made to Mr. Hedrick at the time when this matter was suggested, "You had better look after them, they being among your own acquaintances," and he replied: "No, we prefer that you send a delegation who are instructed and who are well posted, and who will be able to present thoroughly and fully your views and your position in regard to the doctrine."

He made that reply when it was suggested that Hedrick and

Owens had better look after their own organization. They were at the conference and knew our position and it was suggested that they could look after their own people, and I remember distinctly that that was the reply that Mr. Hedrick made.

Page thirty-seven of the book handed me marked Exhibit N contains the minutes of the conference about which I have been testifying. I was the clerk of that conference. It was held October 6, 1857, at Zarahemla. The witness reads from page thirty-seven of Exhibit N the following: "Upon motion, Brothers Owens and Hedrick were received as representatives of the Saints in Woodford county, Illinois, and vicinity, and the right hand of fellowship was given them."

That reference to the question of the Bishop, Exhibit E, being the
231 1835 edition of the Book of Doctrine and Covenants, paragraph 3, section 61, reads as follows: "And again, it is meet that my servant Joseph Smith, jr., should have a house built in which to live and translate. And again it is meet that my servant Sidney Rigdon should live as seemeth him good, inasmuch as he keepeth my commandments. And again, I have called my servant Edward Partridge, and given a commandment, that he should be appointed by the voice of the church, and ordained a bishop unto the church, to leave his merchandise and spend all his time in the labors of the church; to see to all things as it shall be appointed unto him, in my laws in the day that I shall give them. And this because his heart is pure before me, for he is like unto Nathaniel of old, in whom there is no guile. These words are given unto you, and they are pure before me: wherefore beware how you hold them, for they are to be answered upon your souls in the day of judgment; even so. Amen.

The date of the revelation read was February, 1831, and paragraph ten, section twenty, of Exhibit E on the same subject, is as follows: "Let my servant Titus Billings, who has the care thereof dispose of the land, that he may be prepared in the coming spring, to take his journey up unto the land of Zion, with those that dwell upon the face thereof, excepting those whom I shall reserve unto myself, that shall not go until I shall command them. And let all the moneys which can be spared, it mattereth not unto me whether it be little or much, be sent up unto the land of Zion, unto them whom I have appointed to receive." The last paragraph read was dated August, 1831.

CROSS-EXAMINATION.

I stated that I was first counselor to the President of the Reorganized Church and that Joseph Smith was the President of the church. The same Joseph Smith whose deposition was taken in this case a few days ago. We have priority amongst the counselors. That simply means that the quorum is composed of three and that the first counselor has priority. The duties of the first counselor are to advise with the President of the church in respect to the af-

fairs pertaining to the church or more particularly in all matters pertaining to the Presidency.

The duties of the President are to preside over the conferences of the church, over the church as a body, counsel and direct in connection with his counselors, and direct the Quorum of Twelve in their administration. His powers aside from methods of simple procedure in the church and his rights are to be a revelator to the church, a translator, and seer. These are the rights and powers that pertain to that office. He has also the right to exercise the gift of prophecy as the presiding prophet of the church. These are prerogatives of course that pertain to the First Presidency, the First President, of course, having priority also in respect to calling and ordaining bishops. That is one of the provisions made in the law of the church.

There are a variety of matters that are referred to the conferences by the ministry, such matters as missions, finances, and the conference also has authority of approving and disapproving those who may be nominated to office, and the conferences also have the right
232 to determine whether they will receive or reject what purports to be revelation. Conferences have all the time, from the first step in the reorganization, exercised that right, so far as I am aware and the first conference of which we have any account or record exercised that right.

At the first conference, the question came up on a resolution to indorse the Bible, the Book of Mormon, and the book of Doctrine and Covenants as containing the laws of the church. That was done also in 1835, and at other times prior to 1844; and it was carrying out the same general principle and was so understood at the time and has been so understood by the church. It was so exemplified in the case of Mr. Smith, for when he came before the church or conference acting in its representative capacity and stated that he had received a direct call or revelation from God that he was to act in the capacity of the President of the church, the conference passed on that question, or rather the quorums of the church that were present, the ministry and the entire body of the people acted upon it and approved of it. They indorsed it and so far as I am now conscious of the facts, all the revelations that were ever given to the church for its government were presented to them and accepted by the voice of the body.

Officers obtain authority in the Reorganized Church sometimes by nomination and appointment by the body, and then by being set apart under the hands of competent ministry and then receiving license by a voice of the body. Succession comes in office in the event of death or vacancy, sometimes by direct endowment by the Spirit, sometimes by nomination, as you may say, through some of the ministry.

So far as the succession to the office of the First Presidency of the church is concerned, the right descends by lineage, that is to say, so far as the office of the First Presidency is concerned, it is in harmony with the history of the precedents we find in the Book of Mor-

mon and in the New Testament Scriptures, as well as the Old Testament, and in harmony with the Book of Covenants that that office may or will descend by lineage. In order, however, that that shall be effective and made applicable to the individual, he must be called
233 directly by revelation from God. That applies to the First Presidency, but not necessarily to the apostles. We understand that it relates directly to the First Presidency of the church. There is no action or rule of the church that I am aware of which shows that anything was done with reference to that subject, the subject of apostles; that is, the Reorganized Church has never passed on that question. The Reorganized Church has passed on the question in so far as it applies to the First President. It was a matter or question that was agitated, as near as I can remember, about 1851, and the question was settled in accordance with the precedents that obtained in the Book of Mormon and the Bible upon the precedents and usages that obtained there, and likewise in the Book of Covenants. The special provisions that are made there for it required, in so many words, that that priesthood descended from father to son and point out an instance where it is so descended. I refer to the Melchizedek priesthood.

With reference to other officers in the church, I say that the church has never ruled on the point of succession by lineage to them; that is, that question has never been raised in the conferences of the church that I am aware of; but so far as the First President of the church is concerned, the rule of lineage is a recognized rule of the church. The rule is that in the event of the First President of the church dying, the eldest son, if he has one, has a lineal right—what we denominate a lineal right—to the office of his father, although he may not be prepared at the time to enter upon the duties of his office; though were he called to take upon himself the duties
234 of the office, he could do so provided he was of suitable age and such other conditions as must be complied with are present, before he can enter upon the duties of his office. These conditions and that of being the eldest son of the deceased President of the Church, and the other conditions, that he must be of suitable age, and first of all, he must be specially called to the office by a revelation commanding him to take upon himself the duties of the office, and this revelation must be of such a character as to satisfy the church that his call is from God. That is the view entertained from the first, and which is entertained now, so far as I am aware.

The rule applies to a particular son, the eldest son, provided he is competent, and the conditions surrounding his call are acceptable. The eldest son has what is called the birthright; that is, the lineal birthright. No other son has it, so long as the first and eldest son is alive. In case the first son had all the conditions and qualifications for the office of the First President and should die before his father, in that case, so far as the right itself is concerned, it would

devolve upon the next son. That is what we understand to be the law and in harmony with the precedents.

These precedents are found in the Book of Covenants, in section 104, paragraph 18, page 293 of exhibit J, and are as follows: "The order of this priesthood was confirmed to be handed down from father to son, and rightly belongs to the literal descendants of the chosen seed, to whom the promises were made. This order was instituted in the days of Adam, and came down by lineage in the following manner: From Adam to Seth, who was ordained by Adam at the age of 69 years, and was blessed by him three years previous to his (Adam's) death, and received the promise of God by his father, that his posterity should be chosen of the Lord, and that they should be preserved unto the end of the earth, because he (Seth) was a perfect man, and his likeness was the express likeness of his father, insomuch that he seemed to be like unto his father in all things; and could be distinguished from him only by his age." Then follows a long list of succession from father to son, which I suppose it is not necessary for me to read. The quotation I have given above includes paragraphs 18 and 19 of section 104, and is found on page 293.

Following these paragraphs, there is more or less in relation to the same subject, all the way down to the twenty-eighth paragraph. Now there is another passage that you will find in section 107, paragraph 18, on page 307 of the same exhibit, which is as follows: "And now, I say unto you, as pertaining to my boarding-house, which I have commanded you to build, for the boarding of strangers [that was a joint-stock affair], let it be built unto my name, and let my name be named upon it, and let my servant Joseph and his house have place therein, from generation to generation; for this anointing have I put upon his head, that his blessing shall also be put upon
235 the head of his posterity after him; and as I said unto Abraham concerning the kindreds of the earth, even so I say unto my servant Joseph, in thee, and in thy seed, shall the kindred of the earth be blessed. Therefore, let my servant Joseph, and his seed after him, have place in that house from generation to generation, forever and ever, saith the Lord, and let the name of that house be called the Nauvoo House; and let it be a delightful habitation for man, and a resting place for the weary traveler, that he may contemplate the glory of Zion, and the glory of this, the corner-stone thereof; that he may receive, also, the counsel from those whom I have set to be as plants of renown, and as watchmen upon her walls."

That is the paragraph. It says, "This anointing have I put upon his head, that his blessing shall also be put upon the head of his posterity after him." That we understand to mean the ministerial blessing, and to comprehend the Presidency of the Church. The prophetic office is confirmed in this, "That his blessing shall also be put upon the head of his posterity after him." According to the construction we put upon this, and we believe it to be correct, "the head" of his posterity is his eldest son. In case the eldest son dies,

the next son in point of lineage would then be the eldest son. That follows as a natural consequence. That is not simply my conclusion. I understand the head of a man's posterity, if he has half a dozen sons, may be John to-day, and if John dies to-day, to-morrow it may be Thomas, who is the next son in point of succession. In case John was the eldest and he dies, the next oldest son is the head of his posterity. I understand that to be the law as laid down in the section I have read, and it is the law of common sense too. And it is a fact that if the eldest son
236 dies, having a son himself, the right goes to that son—that is true; but in this case, we have been speaking of direct succession from father to son, and that is the subject that my answers have been limited to.

By direct succession, after this right passes from the eldest son from the father, then the authority develops in that son, as a matter of course; and if that eldest son dies, having a son, and all other conditions are favorable, according to the law, that son inherits from his father in the same manner as his father inherited before him. The law of lineage points to the fact that the priesthood descends from father to son, to the eldest son; so long as he is living, he is the heir to the office which his father held or holds, and of course until that son dies it cannot descend to the next of lineage. But if the eldest son dies while his father holds the priestly office, then the right of succession descends to the next son, which would be the head of the posterity. Yes sir, I have said it is laid down in our standard books beyond question that the office descends from father to son, and it descends to the eldest. It goes to him because the eldest son holds the birthright, and if the eldest son dies before the office devolves upon him, and at the time of his death he has a brother, the right would descend to that brother, the brother being the head of the posterity. It would not go to the eldest son of the son who died before the office devolved upon him. The principle as I view it, is a very simple one; it is simply a passing down from father to son, not to somebody else's son, but simply passes down from father to son, and we claim that that is the precedent established in the Book of Mormon, and we can show a number of instances where, beyond a question, that where there was a son it went to the son and was so provided for.

The date of the revelation to which you now call my attention is 1841. There are other revelations since 1835. The revelation from
238 which I have been quoting, was delivered to Joseph Smith, the President of the original Church, in the year 1841. I was not a member of the church at that time. The Book of Covenants, in which it appears, was indorsed as an entirety by the original church, and also by the Reorganized Church.

Yes sir, I said that I was acquainted with the doctrines historically of the original church from its inception, and that I was personally acquainted with the doctrines of the Reorganized Church; and I have

been testifying from my personal knowledge of the doctrines of the Reorganized Church and my historical knowledge of the original church. I believe I do, as a matter of fact, understand the history of the original and the Reorganized Church, and I have arrived at that knowledge from my reading and from my official position in the Reorganized Church, and I understand the doctrine from the fact that I have carefully considered and studied it from the same situation. I understand the law of the church prior to the time I became a member, from my historical research, and since I became a member from my own knowledge; and from those sources I base my knowledge of what I have been testifying about. There is no other way of arriving at a determination in connection with the original church only from history and the authorized books of the church and what they teach, but since I have been a member of the Reorganized Church, I have personal knowledge regarding what has taken place since then.

239 We understand of Cain and Abel, that Abel was slain by his brother Cain, and that Cain lost his right to the priesthood by his transgression, and that therefore it went to the next son, and that was Seth; and that the priestly line having been developed in Seth from Adam, it followed down along the line of Seth's posterity; and we understand that the promise was to Seth's posterity, because Seth was chosen of the Lord. We understand that the succession was to follow because of Cain's transgression. I don't know whether the promise was made to any particular one of his seed or not.

Noah was the descendant of Seth in the lineal line. It is not a fact that Seth's posterity was cut off in the flood, not to the extent that they were annihilated. There might have been more or less of them cut off, but not to the point of annihilation. I understand that Noah and his sons were saved from the flood, or saved through the flood, but I have no knowledge of any other ones; that is, I have no knowledge from biblical sources. There is a good deal of speculation about whether all the people in the world after the flood were descendants of Noah. I mean the speculation that is held about the Bible; and it is claimed that the theory or speculation that all colored people came from the branch of Cain, that some were carried over the flood by Noah, and were not reckoned with the seed of Noah and taken into the account of the people in the world after the flood—some people are inclined to speculate that way. So far as I am concerned, I cannot recognize any authority in the Bible for it.

It is not a fact that all persons are entitled to this priesthood. They are not all firstborn. You must understand that there is a law of birthright that pertains to the law of lineage, as I stated at the
240 first. That would not entitle all to this priesthood; it would if we were all firstborn, but we are not, and, therefore, we cannot all belong to this priesthood, for that belongs only as a matter of birthright to the firstborn, unless the firstborn transgresses in some way to deprive him of his birthright. So far as inheriting the presidency

is concerned, that right descends to the firstborn. That was not the fact in relation to Joseph Smith. No sir, he was not the firstborn of his father. I understand that he was not the firstborn, but you, in asking that question, overlook a fact that I have stated repeatedly, that the right cannot exist unless the father exercises the priestly function, and Joseph Smith's father did not. The priesthood was developed in Joseph himself, and the reason he came into the possession of the priestly function was because it was developed in himself. It was something that was developed within Joseph himself, and therefore it was something that he could not have inherited from his father. The theory is that he received it by direct commandment, by revelation; and then he was accepted and appointed by the church, and upheld by the faith, and confidence, and prayers of the church in the fulfillment of that office.

We understand that Joseph Smith was in the lineage of his father all the way back to the days of Joseph in Egypt. We claim that, as
242 it is set forth in the Book of Mormon. It is found on the sixtieth page of Exhibit F. I do not know as anything was said with reference to the lineage of Oliver Cowdery; that is, as to where his were, or who they were, or where they came from. I am not aware that there is anything said about that, any further than he was of the lineage of Ephraim, the son of Joseph. This subject of lineage is set forth in the Book of Mormon, exhibit F, and is as follows: "And thus prophesied Joseph [of Egypt], saying: Behold, that seer will the Lord bless; and they that seek to destroy him, shall be confounded: for this promise, of which I have obtained of the Lord, of the fruit of thy loins, shall be fulfilled. Behold I am sure of the fulfilling of this promise. And his name shall be called after me; and it shall be after the name of his father. And he shall be like unto me; for the thing which the Lord shall bring forth by his hand, by the power of the Lord shall bring my people unto salvation; yea, thus prophesied Joseph, I am sure of this thing, even as I am sure of the promise of Moses: for the Lord hath said unto me, I will preserve thy seed forever. And the Lord hath said, I will raise up a Moses; and I will give power unto him in a rod; and I will give judgment unto him in writing. Yet I will not loose his tongue, that he shall speak much: for I will not make him mighty in speaking. But I will write unto him my law, by the finger of mine own hand; and I will make a spokesman for him. . . . And I, behold, I will give unto him that he shall write the writing of the fruit of thy loins, unto the fruit of thy loins; and the spokesman of thy loins shall declare it. And the words which he shall write, shall be the words which are expedient in my wisdom, should go forth unto the fruit of thy loins. And it shall be as if the fruit of thy loins had cried unto them from the dust; for I know their faith. And they shall cry from the dust; yea, even repentance unto their brethren, even after many generations have gone by them. And it shall come to pass that their cry shall go, even according to the simpleness of their words.

Because of their faith, their words shall proceed forth out of my mouth unto their brethren, who are the fruit of thy loins; and the weakness of their words will I make strong in their faith, unto the remembering of my covenant which I made unto thy fathers. And now, behold, my son Joseph, after this manner did my father of old prophesy. Wherefore, because of this covenant thou art blessed: for thy seed shall not be destroyed, for they shall hearken unto the words of the book. And there shall raise up one mighty among them, who shall do much good, both in word and in deed, being an instrument in the hands of God, with exceeding faith, to work mighty wonders, and do that thing which is great in the sight of God, unto the bringing to pass much restoration unto the house of Israel, and unto the seed of thy brethren. And now, blessed art thou Joseph. Behold, thou art little, wherefore, hearken unto the words of thy brother, Nephi, and it shall be done unto thee, even according to the words which I have spoken. Remember the words of thy dying father. Amen."

Now I have read that, and we know that the church was always so instructed, so far as we can learn from the church organs, and the law as laid down in the standard books of the church. Oliver Cowdery is spoken of in the text read as the spokesman. It was so
243 understood to refer to him. We understand that the one mentioned here, whose name was to be Joseph after the name of his father, was Joseph Smith, and not Oliver Cowdery.

In one of the extracts I have read from the Book of Doctrine and Covenants, it is stated that they were called to be apostles, and this in the Book of Mormon, just read, claims that Joseph was to be called a seer and Oliver Cowdery was to be his spokesman and was
244 his spokesman. The first and third paragraphs of exhibit J, which you asked me to read, are as follows; first paragraph: "Verily thus saith the Lord unto you, my servants, concerning the parable of the wheat and of the tares: behold, verily I say that the field was the world, and the apostles were the sowers of the seed; and after they have fallen asleep, the great persecutor of the church, the apostate, the whore, even Babylon, that maketh all nations to drink of her cup, in whose hearts the enemy, even Satan, sitteth to reign; behold, he soweth the tares, wherefore the tares choke the wheat and drive the church into the wilderness." Third paragraph: "Therefore, thus saith the Lord unto you, with whom the priesthood hath continued through the lineage of your fathers, for ye are lawful heirs, according to the flesh, and have been hid from the world with Christ in God: therefore your life and the priesthood hath remained, and must needs remain, through you and your lineage, until the restoration of all things spoken by the mouths of all the holy prophets since the world began."

I have stated the rule to be that this priesthood descends from father to son, that that was also the teaching of the Book of Mormon. There are instances where it descended from one brother to another.

I am not aware that Nephi had any sons in that line, in the line of the priesthood; I am not aware that he had. The kingly authority was handed down from father to son on the same general principle that the priesthood was, and the kingly authority developed in the line of Nephi, and the priestly authority in the line of Jacob; and the priesthood, that is, the presidency of the priesthood, developed in the line of Jacob, while the kingly authority developed in the line of Nephi. Those who hold, or rather held, the sacred things or records of the church, that function belonged always to the Presiding High Priest or President, and that descended in the line of Jacob, and went from father to son.

Now while that was the rule, like all other rules, there were exceptions to it, and these exceptions are stated in so many words, such as having no seed; for instance, the person holding that authority and having no seed. There was an instance where it was conferred on King Benjamin because he was known to be a just man and the priestly authority was conferred on him. I am not aware from whom Nephi received his priesthood; I don't think the Book of Mormon states that. The supposition is that it was from his father. That is the only reasonable supposition, because it is not a matter of history how he did receive it. We have a record that Ne-
248 phi consecrated his brothers Joseph and Jacob to be teachers, but as to the further office, that of holding the presidency, we have no historical record of it that I am aware of.

I have answered and said that the priesthood developed in Jacob. That was the presiding priesthood, in other words, the presidency
249 of the priesthood, for it says here (reading from Exhibit F) "the plates and the Urim and Thummim were to be handed down from generation to generation, from one prophet to another," and they descended down in the line of Jacob in that way, and from Jacob to Enos, and from Enos to Jarom. I think that was the way of it, if my memory serves me right.

I am not compelled to rely on my memory; here is what the book says; page 131, Exhibit F, is as follows; the part I especially refer
259 to is in the ninth paragraph: "And I, Jacob, saw that I must soon go down to my grave; wherefore, I said unto my son Enos, Take these plates. And I told him the things which my brother Nephi had commanded me; and he promised obedience unto the commands. And I make an end of my writings upon these plates, which writing has been small; and to the reader I bid farewell, hoping that many of my brethren may read my words. Brethren, adieu."

And then coming to the book of Enos, it says on page one hundred thirty-four—no, it is on page one hundred and thirty-one; it says: "Behold, it came to pass that I, Enos, knowing my father, that he was a just man: for he taught me in his language, and also in the nurture and admonition of the Lord. And blessed be the name of my God for it. And I will tell you of the wrestle which I had before God, before I received a remission of my sins." And he

goes on and states how he hunted beasts in the forest. It appears from this that the priesthood descended to Jarom, for on page 134 we see, "Now, behold, I, Jarom, write a few words according to the commandment of my father Enos, that our genealogy be kept. And as these plates are small, and as these things are written for the intent of the benefit of our brethren, the Lamanites, wherefore, it must needs be that I write a little; but I shall not write the things of my prophesying, nor of my revelations. For what could I write more than my fathers have written? For have not they revealed the plan of salvation? I say unto you, yea; and this sufficeth me." And passing on down page 135 to this paragraph, I read the latter part: "I, Jarom, do not write more, for the plates are small. But behold, my brethren, you can go to the other plates of Nephi: for behold, upon them the record of our wars are engraven, according to the writings of the kings, or those which they caused to be written. And I delivered these plates into the hands of my son Omni, that they may be kept according to the commandments of my fathers." So you see they pass on to Omni, and from him to his son Amaron, and from him to his son Chemish, and then to his son Abinadom, and so on; for that was the order of the usage in those times.

251 I understand that Nephi held that which pertained to the kingdom; that he held a kingly office; that he himself made plates that pertained to the civil affairs of the people, as mentioned in the epistle to which I have referred. I could not say Nephi did or did not hold the brass plates to which you call my attention. He held plates, and executed plates, but this passage I have just read related to civil affairs, to the civil government, such things as are in contradistinction to the priestly office.

In regard to the spiritual concerns of the people, it went down the line of Jacob to Enos, from Enos to his son, and from that son to his son, and so on, passing down through the line of Jacob for a number of generations. Now that is what the records show. No sir, I did not say that Lehi gave commandments in regard to the plates that Nephi manufactured. The plates that Nephi prepared, as I understand it, were in relation to the affairs of the civil government, and not in regard to the priestly government; for in these times the priestly office had been developed in Jacob, and passed down that line. That is my understanding of it; that the spiritual office, the priestly function, was developed and passed down the line of Jacob. That is my understanding of the fact, and I believe it to be the fact from the record. I am not prepared to say who prepared the plates that Jacob made his records on. They might have been called the plates of Jacob for all I know. I have not said that Nephi prepared any plates for the sacred things; what I said was, that if he did, I am not aware of it; there is no record that he ever did.

252 To find the doctrine taught by the original church from 1830 to 1834, I go to the book of Mormon, the Book of Covenants, the *Evening and Morning Star*, and the *Messenger and Advocate*. The name of

the church from 1830 to 1834 was the "Church of Christ," the "Church of Latter Day Saints," the "Church of Christ of Latter Day Saints." There were three, or four, or more different forms, as I now remember it, of the name by which the church was designated during that period. That was the case during the period from 1830 to 1834. Yes sir, that was the period to which I confine my answer —the question of the name of the church from 1830 to 1834. On page 317 of Exhibit 3, it is designated as "The Church of Latter Day Saints." That publication is dated May, 1834, and is found in the *Evening and Morning Star*, vol. 2. It is an editorial; at least it is signed "The Editor of the Star."

I do not regard the editorials in that paper as authority in the Reorganized Church—not necessarily. I simply referred to that as proof going to indicate what the usage was at that time with reference to the name of the church; that is all I read or quoted it for. It is simply one of the historical facts going to show what the name of the church was, or tending to show or indicate what it was called at the time that was written. That editor did not have the right to change the name of the church; no sir; I simply offer that as one of the evidences that the church was known by that name at that time, else it would not have been referred to in that way.

253 I can give some other authority; on page 352 is the following: "May 3d, Kirtland, Ohio, 1834. Minutes of the conference of the elders of the Church of Christ, etc." It is called the Church of Christ there, and it goes on and recites as follows: "After prayer, the conference proceeded to discuss the subject of names and appellations, when a motion was made by Sidney Rigdon, and seconded by Newel K. Whitney, that this church be known hereafter by the name of the Church of the Latter Saints. Appropriate remarks were delivered by some of the members, after which the motion was put by the Moderator, and passed by unanimous voice. Resolved that this conference recommend to the conferences and churches abroad, that in making out and transmitting minutes of their proceedings, such minutes and proceedings be made out under the above title."

So far as the mere form of the words is concerned, I understand that to be a change in the name of the church. There was authority for that change—the authority the church possesses in conference.

254 The authority for the original name was usage. It was sometimes called the "Church of God," sometimes called the "Church of Christ," and sometimes the "Church of the Saints." It has been called by various appellations, and I take it that was an action calculated to fix the title by which it was to be then known.

When we turn to the Book of Mormon, we find prophecies that relate to the church that would be organized in the last days, as being the "Church of God," and the "Church of the Lamb of God." You will find these appellations in the Book of Mormon, and it is denominated such by prophecy. This church was denominated in the

prophecy given by Joseph Smith as the Church of Christ. I cannot say whether it went by that name until 1834 or not, or whether there were other names used. So far as that conference is concerned, the minutes of which I have read, the name was changed, and you will observe that it is referred to as the "Church of Christ," which I take it to be the name by which it had been known, and then by resolution it was changed to the "Church of Latter Day Saints." From my reading and research concerning the matter, even before that conference, I do not think it was always known and designated as the "Church of Christ," although that was the name given to it in the outset. I think at the same time it was known by other names from what the official church called it. What its official name was at the time, that is between 1830 and 1834, I think they called it the Church of Christ, and some other names too.

I think the name of the Church of Latter Day Saints was given it after Edward Partridge came here to Missouri. I think so, for I understand that Edward Partridge was here as early as 1832. The name was adopted in 1834, and that name was changed after that time. It was changed to the Church of Jesus Christ of Latter Day Saints. I would turn to the authority for that if I had it here, but the fact is, I haven't it here. I don't know whether the *Saints' Herald* published December 18, 1886, will help me out or not; can't say until I examine it. The paragraph marked here in the *Saints' Herald*, De-
255 cember 18, 1886, reads as follows: "The true church is in fact and in essence 'The Church of Jesus Christ,' and is composed of 'Saints,' and latter day Saints at that. In these essential facts lie the verity and propriety of the corporate name, 'The Church of Jesus Christ of Latter Day Saints.' To object to this and demand that the corporate name shall consist exactly and only of these words; viz., 'The Church of Christ,' is to antagonize the prophecies, and the usages of the church, in both ancient and modern times." Another reason lies in the fact that the church in 1834, in conference assembled, saw fit to denominate itself officially, "The Church of the Latter Day Saints."

This was done, it was claimed by some, because there was another church incorporated under the exact title, "The Church of Christ," and it was foreseen that confusion would ensue unless the recorded titles of the two bodies were different and distinct. In 1838, the church adopted the further title, "The Church of Jesus Christ of Latter Day Saints." (See *Millennial Star*, vol. 16, pages 117, 130, 131, etc.) And April 26, 1838, Joseph the Seer received a revelation, saying: "Verily, thus saith the Lord. . . . My Church of Jesus Christ of Latter Day Saints, scattered abroad in all the world; for thus it shall be called in the last days, etc."—*Mill. Star*, vol. 16, pages 147, 148. The change of name in 1838 to the "Church of Jesus Christ of Latter Day Saints" is a matter of history as contained in the *Millennial Star*. We give our authority for it there; just give the authority for what it is worth, and as one of the evidences showing what the title of the church was. That was in 1838 and is a matter

of history as contained in the *Millennial Star*. I do not know that what is recorded there is a fact from any other source than from the
256 record itself. In the *Saints' Herald* published December 18, 1886, where the extract is found to which you call my attention, it is there published as an extract from the *Millennial Star*, and proper credit given. I was one of the editors at that time. I regard it as good authority for what it purports to be. We simply published it as a part of the *Millennial Star* bearing on the account of the name of the church, and published it for the benefit of our readers simply and solely for what it is worth and what it purports to be; and we gave our authority for it and where it may be found in the original publication. It is so stated in the article in the *Millennial Star* to which my attention has been called, that the name of the church was changed by a revelation given by Joseph Smith, or through him, in 1838. That is all I know about it, simply what is stated there. The Reorganized Church has never accepted the *Millennial Star* as authority. Some of the members of the Reorganized Church accepted as authentic the revelation that is there mentioned in the *Millennial Star* as having been given, some others do not. The Reorganized Church as a body has never passed on that question. The term "Jesus Christ" was the name of the church in a distinctive sense. The Church of Christ, and latterly the word *Jesus* was prefixed to it, and then it was called "The Church of Jesus Christ of Latter Day Saints." I cannot find any record other than that I have cited on the question of whether the church ever passed on the name; but it evidently did, for that is the name of the church as we find it in the history of the church that is extant at the present time. That was the name of the church at that time.

Yes sir, I admit that there were revelations after 1834, I do not think that anyone will deny that fact. I suppose the disposition made of revelations after they were given would be to record them; that is, they would be put in along with the church records, and if the revelation given had been acted upon and accepted by the church, it would go into the Book of Doctrine and Covenants. They did not
258 have a book of Doctrine and Covenants in 1834. The first edition of the book of Covenants was in 1835. I believe in 1834 they had a book that was called the Book of Commandments. That was but partially printed; it was in process of publication, and when it came back, they found, as we find it recorded, that there were some typographical and other errors in it, and it was not accepted by the committee that was appointed to prepare and present to the church such of the commandments and revelations as were thought best should be presented to the church as containing its doctrine. That committe performed its work, and in August, if my memory serves me, there was a General Assembly or Conference of the church called, and they examined the work of this committee and passed upon it, indorsing it without dissent.

In August (I believe), 1835, the work was accepted that became

the authorized Book of Doctrine and Covenants, as containing the doctrine and law of the Church of Jesus Christ of Latter Day Saints.

The Book of Commandments was composed in part of the revelations that were sent up here to Independence to be published and they were placed in the hands of John Whitmer, Oliver Cowdery, and W. W. Phelps, and the work was never published. There was the very best reason in the world why the book was not published, and that was the printing press was demolished by a mob, the type of the work was pied, and the work was never completed; and when that incompleted work was returned to Kirtland, history records the fact that it was generally reputed to be very defective and incomplete typographically and otherwise. And the statement is made that the original document by which to revise and correct it was not destroyed or lost; and so then it was, that as nothing could be done with this imperfect work, a committee was appointed to oversee this work of republishing and report to the Conference, which they did, and their work was acted on officially by the church, the various quorums, etc., and was indorsed. This is how the Book of Doctrine and Covenants came into existence as the work of this last committee. It was printed the same year that it was accepted—the year 1835. At that time it was called the "Church of Latter Day Saints."

I do not know when the next Book of Doctrine and Covenants was printed, I suppose, however, that there was a reprint of the edition of 1835, but am not positive; but the same general work was reprinted at Nauvoo, in 1845 I think. In 1846 there was another edition; that is my memory now.

The Reorganized Church issued an edition of it in 1860 or '61. The edition I refer to was issued at Cincinnati, Ohio. I think there were two editions that were printed at Cincinnati, but I cannot tell when both were issued. I cannot say as a fact that there was more than one issued at Cincinnati; but I am under the impression that there was, although I cannot remember accurately. That was in 1860 or '61. There was another edition published at Plano, Illinois. The date I do not recollect; the book will show for itself. I think the last edition, or the plates for the last edition, were prepared in 1880. We do the printing right along as it is necessary. We have the plates prepared, and we issue them in lots of five hundred or one thousand as it is necessary. We print them in whatever quantity may be necessary at the time. As we have the plates from which to print them, we can do that whenever we desire to do so.

I do not think it is a fact that in the later editions of the Book of Covenants the last edition contained matter that was not in the last prior edition. There is not always new matter added, but there have been some additions made in some of the editions I know. I cannot say there are fifteen or twenty revelations in the back part of the book that the church is now using that are not found in any of the

other editions of the same book; I do not think there are that many. There is a revelation that was given in 1861 by the President of the
259 Church, Joseph Smith, one in 1863, and one in 1865, another in 1873, and occasionally there has been one since. Some of the revelations given have never been printed. We record these revelations the same as other revelations are recorded. That is done by the action of the church adopting and receiving them. When they have been adopted by the church, they become a law and rule of action binding upon the church. Yes, sir, all these have been adopted by the church which are adopted as rules of action for the church. As soon as they are adopted, they become binding upon it.

In so far as the authority of Joseph Smith the present President of the Reorganized Church is concerned, he has the right and authority for giving revelation. We claim, in the first place, that he was appointed to do that by prophecy, under the hands of his father; and we have the testimony of those who were present, and who are reliable and competent witnesses, who claim to have been present when he was appointed to that office prospectively; and we claim that such prophetic testimonies were likewise given to the church years before, that he would eventually come to the church and become its presiding officer. We had this prophetic testimony from 1851 along down to 1860, that he would eventually come to the church and be its presiding officer, and have the place formerly occupied by his father. He came to the church at the time of the conference at Amboy, Illinois, in 1860, and claimed that he had been directly called of God to the position of President of the Church, and the matter was submitted to the people, and such was the manifestation of the Spirit and blessing of God that it satisfied the elders and others composing the body of that conference that he was called; and he was then nominated and accepted by a unanimous vote or consent of the peple, and was ordained under the hands of Zenas H. Gurley, Samuel Powers, William Marks, and myself to the Presidency of the Church, to be possessed of and have all the authority, powers, and everything that pertained to that office. That is the history of how Joseph Smith came to the Reorganized Church.

Yes sir, Joseph Smith was killed June 27, 1844, I believe. Prior to that time it was a law of the church that the right to appoint a succes-
260 sor was vested in Joseph Smith. We understand that paragraph 18 of section 107 of Exhibit E is a prophetic promise, for it states that the "blessings" (alluding to the ministerial blessing of his father) was to be placed on the head of his posterity, and Joseph, being the eldest son, was, as a matter of course, the head of that posterity. Joseph Smith, who has been called the "martyr" by other witnesses, had other sons than Joseph, but none prior to the birth of this son, Joseph, that I am aware of. He had other sons born after Joseph Smith. It takes a man's children to make up his seed and all his children. The law does not say that the office descends to a man's children; it does not say that it descends to his posterity; it says

definitely and conclusively that it shall be placed upon "the head" of his posterity; and a man's posterity may be made up of a score or more of his sons, and "the head" of that posterity is the eldest son living. I am sure about that.

The reason that Joseph Smith is the head of his father's posterity is that he is the eldest son. Just in the same manner that the head of a class is constituted; the first one in the class the is head of it. I make the statement, sir, that Joseph Smith was entitled to succeed to his father's office by virtue of the general law of lineage, in the first place, and then by reason of the special promise made in 1832, in the revelation I have just read, where the promise was made to Joseph that it should remain in his seed,—this priesthood should remain in his seed, "until the restoration of all things spoken by the mouths of all the holy prophets since the world began.". And then again in paragraph 18, section 107, Exhibit E, where it says that the "blessings" of Joseph should go to the "head" of his posterity; and then we depend somewhat on the testimony of those who were present, various people who were present at the time he individually indicated his son Joseph personally as his successor to the office.

That revelation (1844) became a law of the church. The Reorganized Church adopted it, and the presumption is that it was adopted in the days of Joseph the Seer. I am not aware of any record of it except in the *Times and Seasons*, prior to the year 1844. The way of it is, the revelation must first be given to the revelator, and then by him given to the church, and be adopted by the church before it can become a law and rule of action to the church. Not until it has been approved and accepted by the body does it become a law binding upon the church. Yes sir, I stated that the revelation was given to Joseph Smith the Martyr before his death relative to his successor. The
261 Reorganized Church adopted the revelation and made it binding upon the church. The Reorganized Church adopted the Book of Doctrine and Covenants, and that revelation was a part of it embraced in the Book of Doctrine and Covenants at the time, and the whole book was adopted.

I am not aware of any actions being taken by the quorums and various bodies of the church upon revelations after 1835 and before 1844. I don't know whether there was any or not; I simply say that I am not aware of any. I have no personal knowledge of any, was not a member of the church at that time, and there is no history that recites the fact as to whether there was or not, so far as I know. The revelations given after 1835 and prior to 1844 became binding upon the church in compliance with the law that was laid down whereby they were to receive and adopt revelations. We find the rule embodied in the revelation that was handed down to the church. The rule was observed in 1835 I think, and although there is no history that I am aware of that says anything on the subject, yet I think it is fair to presume—I think it is a reasonable presumption—

that they were adopted by the church in accordance with the laws of the church in the same manner.

I will if I can, in the 1835 edition of the Book of Doctrine and Covenants, point out the rule of the church. It is in section 13, page
262 120, of Exhibit E: "Hearken, O ye elders of my church who have assembled yourselves together in my name, even Jesus Christ, the Son of the living God, the Savior of the world; inasmuch as they believe on my name and keep my commandments; again I say unto you, hearken and hear, and obey the law which I shall give unto you: for verily I say, as ye have assembled yourselves together according to the commandment wherewith I commanded you, and are agreed as touching this one thing, and have asked the Father in my name, even so ye shall receive. Behold, verily I say unto you, I give unto you this first commandment, that ye shall go forth in my name, every one of you, excepting my servants, Joseph Smith, jr., and Sidney Rigdon. And I give unto them a commandment that they shall go forth for a little season, and it shall be given by the power of my Spirit when they shall return: and ye shall go forth in the power of my Spirit, preaching my gospel, two by two, in my name, lifting up your voices as with the voice of a trump, declaring my word like unto angels of God: and ye shall go forth baptizing with water, saying, Repent ye, repent ye for the kingdom of heaven is at hand."

That exhibition, in connection with paragraph 1, section 61, same exhibit, I think answers the question, Colonel, that I am told to answer more definitely: "Hearken and hear, O ye my people, saith the Lord and your God, ye whom I delight to bless with the greatest blessings; ye that hear me: and ye that hear me not will I curse, that have professed my name, with the heaviest of all cursings. Hearken, O ye elders of my church whom I have called: behold I give unto you a commandment, that ye shall assemble yourselves together to *agree* upon my word, and by the prayer of your faith ye shall receive my law, that ye may know how to govern my church, and have all things right before me."

Now that is what they would agree to accept, and the next revelation shows that they had assembled together in compliance with that commandment, from the history of the church assembled together a few days after this, which would be in 1831, but whether they were organized in quorums at that time does not appear, and I am unable to say positively whether they were or not. If they were not organized in quorums at that time, revelations would be deliv-
263 ered to the ministry. In the Reorganized Church revelations are first presented to the First Presidency, then they pass to the Twelve, then to the High Council, then to the High Priests, the Seventy, the Elders, the Priests, and the Teachers, and the Deacons, —that is the method of procedure; and if it meets with no snags, then it is presented to the body, the entire body of the church, and if accepted by them, it becomes binding upon the church. This was

the course adopted from the beginning as I understand it. I do not say this was the course from my own knowledge, I say it was the course according to my understanding from the history.

I have not stated that there was a Quorum of Twelve at the time this revelation was received. At that time there was no Seventy. This was prior to 1834. This revelation I have been reading was presented to them. I can give you my knowledge on the subject, if you desire it, and read it to you also. It is presented here in section 61, which I have already read, that they held a conference with them
264 and agreed upon what they would accept as the word of God. They met together in compliance with the requirement, and the presumption is that they proceeded right on in compliance with the spirit of that commandment, and decided what they would receive. That is not altogether a presumption of my own, for it states here that they did that very thing. There is no other conclusion that can be drawn from what is stated here. We have no evidence of that except what is in the book of Covenants at that time. At that time they had no church paper printed. That was in 1831, and the Book of Covenants was printed in 1835. The doctrine adopted in 1831 would be the doctrine contained in the New Testament Scriptures and the Book of Mormon. The Bible is placed first in order, and the Book of Mormon comes next, then they were to remember the church ordinances and covenants to do them. That we find in the revelation of February, 1831.

Yes sir, I say in the Reorganized Church, when a revelation is given it has to go through all the quorums, and then through the body of the church, and be accepted, before it becomes a law binding upon the church. Prior to 1834, I am not aware that there is any history that relates to that subject any further than what is contained here that I have read. Exhibit E contains a commandment that the ministry and church should decide upon what they would accept and be governed by as the word of God, and I mean the quorums by the word *ministry*, when that includes the ministry, for it may be organized in quorums, or singly.

I am not prepared to say whether the quorums were organized then or not. At that time there was a First Presidency in the sense of being the first elders of the church. Joseph was ordained the first elder of the church. He was ordained as being the first elder of the church and Oliver Cowdery the second; but in the sense of there being a First Presidency quorum, that did not occur until 1831, as far as my memory serves me now. The first Apostles were not chosen until 1835 or '36, that is, *as a quorum*, they did not appear until that time. I said there was a body in the old church called the Seventy. It was chosen about the same time as the Twelve Apostles. We have other quorums in the Reorganized Church than the Seventy and the Quorum of Twelve; we have High Priests, Elders, Priests, Teachers, and Deacons. Between 1830 and '34, I am not prepared to say how many quorums they had. I can give you what

there is in the record on the question. It is a record of the General Assembly of the Church. The date is August 17, 1835. At that time there was a High Council of the church at Kirtland, presided over by W. W. Phelps and J. Whitmer, and there was another High Council called the High Council of the Church of Missouri, to look after the affairs of the church here in this part of the world; Bishop N. K. Whitney presided over this. The President, Leonard Rich, organized the council of Seventy. Erastus Babbitt organized the Teachers, and Thomas Gates and others organized the entire assembly. That was the nature of the organization at the time this was received. This is found on pages 255–257 of Exhibit E. These organizations might have been made in part, some of them at least, prior to that time. I think that was the beginning of the organization of the quorums.

We have these same organizations in the Reorganized Church. The Reorganized Church has more than the original church had from 1830 to '34. They were in process of development then and did not arrive at completion until 1835. The quorums were not completed until that time. I suppose the reason they were not completed earlier was, there were not enough in the church to fill them up. If they had filled them up and completed the organization at that time, it would have taken more than the membership at the first to complete them, and they had to be formed out of suitable material of course. There have been General Assemblies since 1835. There have been Grand Councils and General Councils.

266 We regard our General Conferences, where there is a conference of the entire ministry, as the same thing as a General Assembly. Conferences and General Assemblies are synonymous with us; that is, the significance of the terms is the same. The General Conference of the Reorganized Church is composed of the officers of the church meeting together at a designated place. As soon as they are together, they proceed to choose officers of that body out of the ministry, and they do that out of courtesy and the general law governing in the case whereby it is customary to take the Presidency of the Church, whether it be one, two, or three persons, they are usually chosen, one of them, or one of them is nominated to preside, and they may be chosen or rejected. The law regulating that is the law of custom largely. The body can choose whoever it sees fit to preside over the General Assembly. Yes, sir, I claim that the conference of the Reorganized Church is equivalent to a General Assembly of the former church. Everybody is invited; it is a general announcement. It is composed of the officers of the church, members of the church that may come together to the assembly or conference; in other words, it is a General Conference of the membership of the church. Out of courtesy to the membership, they are sometimes invited to take part in the proceedings and discuss the topics that may be up for consideration. Yes, sir, the membership takes part in these conferences; that is a courtesy that is ex-

tended to the membership, and they are entitled to vote upon questions of general import. I understand that the laymembership of the church was admitted tc the conferences from the very start. We have a membership of twenty-five thousand people or more, and at the conferences we would admit them, or what we had room for. If the whole twenty-five thousand should come and they could all get together, they would be admitted. If all the laymembership were in attendance, their votes on some questions would count as much as the votes of the officers and ministry.

There are some restrictions upon their right to vote. They can vote upon any matter that is of general importance to the church that is referred to them by the presiding officer. In case it was not referred to them, they would not vote on it of course. All questions would have to be referred to them before they could vote. In all cases where the government or doctrine of the church is involved in any way, the right to vote is usually limited to the ministry. It is usually, in all our conferences, limited to the ministry, and especially is this so upon questions of vital importance involving or affecting the doctrine of the church and its government; but as I stated before, where it is a matter of sustaining officers, such a question is usually put to the entire ministry and membership present, both the ministry and membership, and if the ministry should all vote one way on these general questions and the lay membership another way, the majority would carry the day; but it would be a very unfortunate thing for such an occurrence to happen. If it did happen, the majority would carry it of course, for votes always carry the question being voted upon.

It is a fact that the law of our church provides for a delegate system from the various local churches or branches. Some of the private or laymembers come into our conferences that way, especially as delegates, and in that case where there is a vote taken on the yeas and nays, then their right to vote is limited in respect to church government. They are permitted to vote, but the right to vote is not permitted to laymembers, unless it is authorized by the presiding officer at the time. I think the principle of lay delegates in church assemblies was permitted prior to 1844—perhaps not carried to the extent that it is with us.

To the assembly that met in 1835, I said the delegates were elected or sent by the church from Missouri, from Clay county, and they would evidently be elected by the individual church. The delegates were officers, not laymembers; but whether there were any delegates that were not officers, I cannot say until I examine the records.

I can tell that the doctrine of the Reorganized Church at the present time is the same as the doctrine of the church from 1830 to '44; I can tell it by the principles that are in the records. Here is an organization of the High Council that is recorded in the Book of Doctrine and Covenants and in the church history. We find these

things recorded in both, not as explicitly, perhaps, as we might wish; but explicitly enough to satisfy anyone, according to my mind, of the facts they will and do teach. We have a record which says that the council was composed not only of officers, but likewise of the membership. The membership was there, and was represented by a vote in the organization of that body. These conferences assembled between 1835 and '44. Most assuredly they did.

The conferences that assembled from 1835 to 1844 had secretaries, and kept a record of their proceedings. We have these records in the *Times and Seasons*. The original records, I don't know what has become of them, but if I am allowed to state the fact, we have been informed that they were burned; we also heard or learned that some of them were taken to Salt Lake. So far as the record of names was concerned, and so far as some of the church history is concerned, I understand the fact to be, but I will add that it was the usual thing in those days to have the record printed at once; that is, the record of the proceedings of the conference. I do not know who burned these records. It is reported they were burned by the Utah Mormons. I do not know it to be a fact, and am not stating it as a fact. It is a fact that there were revelations given that have never been published. We have some now. We claim that the Reorganized Church is the successor of the original church organized in April, 1830. We have not the records of the original church simply because they were taken to Salt Lake by the faction that went west under the leadership of Brigham Young.

These records, as I have it, were stolen. The records of the original church. That is my information. I had it from Mrs. Emma Smith, the widow of Joseph Smith; she said that property was taken, and private property also. I also said that it was reported these records were burned by the parties that got them. I suppose it is a matter of rumor about their being burned. I got it from some parties who stood close to the head of affairs, that they were burned. I do not say they were burned by the Twelve that were in office at the time of the death of Joseph Smith, or anyone in particular, because I do not wish to incriminate anyone without positive knowledge. It is simply a rumor that has come to us in such a way and from such a source that we cannot very well question the fact that the records were taken out and burned.

We call the church to which I now belong the Reorganized Church, simply because it was a reorganization of the elements that composed the old, original church. It had become disorganized, and at the time of the disorganization became scattered to different parts of the world; it then had no complete organization. *Church*, as a term applied, at times signifies a body of worshipers, and sometimes it applies to a complete organized body of worshipers. Between 1844 and '52 there was no organized church except so far as it relates to branches. There were branches of the church, and in that sense the church had an organized existence. There were numbers

of branches of the church in different parts of the country, but the church as a whole had ceased to exist, from the fact that it was disorganized. William Smith's was not one of the branches I refer to. I belonged to that branch myself. It was not *the* church; it was without doubt *a* church; but it was not *the* church. It claimed to have the Twelve Apostles, the First Presidency, the Seventy, and councils, and all these things. I said I belonged to William Smith's church at one time; I said it was a branch. I do not belong to that branch now; I just simply dropped out of it. It is not a fact that William Smith helped to drop me out.

I did not say there was a Hedrickite branch of the church; I never said that. The claim that was made when I first got acquainted with them was, that they were a part and portion of the original church; that is, that they were scattered members of the original church, and they did not claim to have any organization as a church beyond simple branches. I went down at one time to confer with them. At that time they were organized into branches. I do not know whether they were a part of the true church or not. That is a matter on which I am not competent to give an opinion. There were a number of their local organizations, perhaps fifteen or twenty of them. I did not visit all of them. I think many of them had been in the primitive church, but after the disruption of the original
71 church, they had organized under their own system, and that system was an organization distinct from the other that had existed in the primitive church. They were comprised, as we understood it, largely of members, who had been, or rather who claimed to have been, members of the original church.

I attended one of the conferences of the Hedrickites, two of them, I believe. It was what was called "the Hedrickite people" afterwards. They were not called by that name then, but afterwards they were called the Hedrickite people. I believe at that time, they did not make any claim to being a distinct organization; they simply claimed to hold the ministerial power and to be members of the church at large.

We did not hold any conference with them at all. I can tell you just what was done if you want it and how it came to be done if it is necessary and you desire to hear it. I visited them, what was called the Hedrickites. There was a body of them together at the time. The meeting was at Bloomington, Illinois. I appeared before that body, I think in the winter of 1857 or '58. I happened to go there because Mr. Hedrick and Mr. Owen attended our conference in the fall of 1857, and they were accepted and received the right hand of fellowship from our people at the time; and at that time Mr. Hedrick and Mr. Owen requested that some of our ministry be sent down to reason with these people and explain to them our position, so as to explain, or rather, so as to effect a union with them, a union of the two bodies; and it was on that application that I was selected, along with Edmund C. Briggs, to go down and see them about it. We

272 went down and I do not remember now whether they had reorganized or whether they were organized at all; at all events, we went down in accordance with that request to explain our position.

It is not a fact that when we admitted Mr. Hedrick and Mr. Owen to our conference that we admitted a body of men that did not believe in the doctrines we did; they signified that they did believe as we did. There was no formal acceptance of the doctrine, but their action in coming into the conference, and acting as they did, and inviting us to send parties prepared to explain our position to them, they certainly acted as if they had accepted our position; in fact they so expressed themselves, and asked us to send parties to explain our position to them so that the rest of their followers might understand it.

They were received in our conference as elders of the church. That was in 1857, at the meeting at Blanchardville. We admitted them as simply belonging to different branches. Their branch was not on the rolls of the conference. Their names were not on the rolls of the conference, and had not been, so far as I am aware. We received them upon their own representation and the representation of those who knew them. Now, then, that is the reason they were admitted.

There is a law of our church that authorizes such a course of procedure; where a person is known to have belonged to the original church and has not been dismembered, they are admitted upon their original membership. Now in Exhibit N entitled, "The Minutes of the Conference of the Church of Jesus Christ of Latter Day Saints, held October 6, 1857," from which I read this morning with reference to the reception of Owens and Hedrick in that conference, the word *Hedrick* in these minutes was not forged there. It is not an interpolation there. The word is written in different ink from the other part of the book. That was simply an act of the writing of it by the individual who afterwards copied the record, and as it was not written plainly at first, he has just written it again on the same lines.

273 No sir, it is not a fact that the word is written over another word in different ink. I think it is the same word. It is possible that the letter *c* has been inserted there. The whole word has not been inserted. You can trace the outlines of the word plainly enough; there is no trouble about that.

In the main, I testify positively as to the genuineness of these records as they stand here. In their main outline they are correct, and I believe absolutely correct. I was clerk of that conference, and the minutes I kept were given into the hands of the Church Recorder, and he entered them as they are here. I don't know whether they were kept correctly or not, but I know these to be the facts that are stated here. I know this to be a fact, for I have a recollection of it independent of what the minutes say. The handwriting in blacker ink than the rest, I do not know, don't know whether it was written by the same party or not. It appears to have been

traced over the other, and might have been the same or some other person's. I should judge from its appearance that the letter *c* had
274 been left out in spelling the word *Hedrick* at first, and had been added afterwards; but whether that was done by the first person who wrote it or at some date subsequent, I could not say. It is my opinion that the letter *c* had been left out, and the clerk traced the original outline, and in doing so inserted the letter *c*.

Yes, sir, it is recited in these minutes in 1857 that Hedrick and
275 some one else was appointed a committee to report on doctrine, and compile a report on doctrine. That was done with a view of presenting the doctrine of the original church in some manner that would be authentic; that is to say, that would be authoritative on the part of the Reorganized Church and to send it abroad as the doctrine of the Reorganized Church. So that in 1857 the doctrine of the Reorganized Church, in so far as publishing an itemized formula is concerned, had been settled, and the object in appointing this committee was to write out a statement of the doctrine and position of the church so that there might be something authoritative to present to the world, a clear and full statement of the position of the Reorganized Church, a clear statement that would be authorized upon all the essential points of doctrine. We had already embraced the Bible, the Book of Mormon, and the Book of Doctrine and Covenants; and this was a statement prepared for the purpose of setting forth the doctrine and faith of the church, and to do so that it would be authorized definitely and specifically for the convenience of the people into whose hands it would come, both of the members of the Reorganized Church and the people outside of the church into whose hands it might come.

I know that at that time the Hedrickites, so called, did not understand the doctrine of lineal descent as we taught it; that is, Mr. Hedrick did not, and they did not understand the Book of Doctrine and Covenants as pointing directly to the oldest son of Joseph Smith as being the proper person to hold the Presidency of the Church. We knew they did not understand that, and we considered at the time that that was the essential point of difference between us. I am not aware of any other differences, or I should say, they were not exactly differences. There was no opposition that I am aware of that existed in the minds of either Mr. Hedrick or Mr. Owens; nothing that was expressed. They did not advocate any special view or principle with regard to the organization of the church at the time they came to our conference at Blanchardville. I found out afterwards that they did entertain some different views; that is, Mr. Hedrick did.

I recognize the pamphlet handed me as a copy of *The Latter Day Saints' Herald*. I probably had a copy of that pamphlet at Plano, November 15, 1864. I recognize the letter which you now show me as being written by myself, and it is probably correct; don't know anything to the contrary. I should say it was a faithful report. The

date is 1864, I believe in September. I was down to Mackinaw in June, 1857, it appears from this letter, but I cannot positively identify the time I was there except from the letter. I only recollect it was in the summer, and the letter recites it was in the month of June; and I assume that the time is correctly stated. This was prior to the conference of Zarahemla. I had no conference at Mackinaw. They had there what they denominated a conference. Old Mr. Judy, and Granville Hedrick, and perhaps half a dozen others, not to exceed a dozen all told—they met at the residence of Father Judy, and at the time, as I understood it, they did not propose to be governed by the Book of Doctrine and Covenants. They did not know what to be governed by, but they proposed that they would not be governed by the Book of Doctrine and Covenants, for it seemed to be a comparatively new thing to them. In the meeting they were then holding, they proposed to have nothing to do with any of the revelations for the reason that they did not seem to understand much of anything about it. Now that is my memory about it. I do not think they refused to accept revelations later than a certain date; no, sir, I cannot say as to that.

It is true that in the letter identified and written by me, I stated as late as June, 1857, in the conference with the Hedrickites at Mackinaw, Illinois, which I attended, that if the church indorsed the revelation given April 6, 1830, they must necessarily indorse all the balance, and that Mr. John E. Page denied the book of Doctrine and Covenants totally. He, Page, argued this publicly at the time. I argued and insisted upon taking all of them. The Hedrickites would take but part of them. John E. Page would have none of them. I did not invite them to unite with me in 1857. I was no part of their conference so far as that was concerned; I was never identified with them. At that time I had very distinct views as to what the gospel was, in my own estimation. So far as the views I held are concerned, they consisted in faith in Christ Jesus as the Savior of the world, and of the doctrine of faith, repentance from dead works, remission of sins, and of baptism for the remission of sins and as a means of becoming identified with the body of the church, the laying on of hands, also the resurrection of the dead, and eternal judgment. Myself along with the church, understood this to be an outline of the fundamental principles of the gospel; we understand them to be the first principles or fundamentals, so to speak. We understand that whatever pertains to the building up of the church,—in harmony with these first principles or fundamentals,—to properly belong to these principles, whatever pertains to the upbuilding of the church and the winning of the souls of men to everlasting salvation, and all of this, redounds to the upbuilding of the church both in this world and in the next.

Yes sir, I claim as an officer and member of the Church of Jesus Christ of Latter Day Saints that the temple property here in Independence should inure to the church proper; and I believe and make

that claim because I believe in the principles of the gospel I have enumerated and what follows. We understand that the original church in its inception indorsed all that led up to these principles, or all that these principles led up to, and which in their development were afterwards taught to the church, and they were the natural outgrowth of the original, fundamental principles. That is a matter of history from 1830 up to 1844.

I have said that the church was disorganized, but that does not mean that it was cut down; that is, it was not cut off. I do not claim that there was any stalk from 1844 down to 1852. You misunderstand me, for we claim that the church did exist though scattered and disrupted, but it was reunited again at that time. It did not take on a specific organization again until that time, but the elements of growth and life were present all the time, and under favorable conditions soon sprang into renewed life. It existed in the body of the people that belonged to the church temporarily. The church was disorganized. They belonged to it after it was disorganized, but
280 they were in a scattered condition. It was like a watch that is taken apart, part of it in one place and part in another, scattered in various places. When it came back again together, it would be a watch, but of course in a scattered condition it would not keep time, but on that account it would be none the less a watch, and would perform its duty again when the various parts were readjusted.

We entertain the idea that the distinguishing feature in the reorganization is the fundamental law by which it is established as an organization. We claim that we hold to the fundamental law and therefore that we had the virtue, so to speak, of the church in that fact, and that fact constituted the vitality that is laid down in our own sacred record. It says, in effect, "Ye are my disciples, if ye keep my commandments; if not, ye are not." Now we claim that we do this, and in virtue of this obedience to the law and commandments our organization constitutes a church, and others who claim to be a church and disregard these principles and commandments are not, and cannot constitute, the church, and are unworthy of membership in the true church. Yes sir, but we hold that the mainspring of the church did not go west. I do not pretend to tell you what portion went there, but I believe that none of its essentials got there. Some of the Twelve Apostles did go, I think eight in number. One of them went to Texas, some remained; William Smith was one, and Lyman Wight was another, and John E. Page another.

We did not get any of the apostles at the time Joseph Smith was killed, in the reorganization. We organized the new apostles out of
281 new material. So long as the old apostles obeyed the rules and regulations, and paid obedience to the laws of the church, they were essential; but when they violated these rules, regulations, and laws, they forfeited their rights, by their unlawful actions. We decided that in council of the Reorganized Church; that was done in 1852. We did not organize a body for the purpose of trying them for their

transgressions; that was not the purpose of the organization. We organized the church by commandment, and we tested the first Twelve by the rules laid down in the books of the church, recognized as standards of authority in the church, both in the primitive, and original church, and in the Reorganized Church.

We did not summon them to appear before that church. They were not tried. They could have been there if they had wanted to, for we hold our conferences public, and everybody is notified to appear. We did not notify the Twelve to be there; did not serve any notice on them in Salt Lake, nor the fellow in Texas. We hold public conferences, and the time and place of holding them were matters of public knowledge; every person has a chance and an opportunity to be there if they see fit. The kind of a notice that was given was that the church had been reorganized and we were transacting all kinds of church business that might properly come before it. We told them in the notification that went abroad in 1852 that it was a body of people that adhered to the original doctrines of the church as contained in the Book of Mormon, the Bible, and the book of Doctrine and Covenants. They were informed in the same way as to where the meeting would be held and when it would be held.

Yes sir, we determined amongst ourselves, by the authentic law of the church, that they who did not go with the Reorganized Church did not adhere to the law as laid down in the books. That was the way it was, and we tried them by the law and order of the church from the first. We were only taking action so far as the church was concerned, and by virtue of its law and order, assuming of course that we were the church, and we said we were the church, and brought the doctrine of the church to prove it. A great many other people said so, and a great many are constantly saying it. They are saying it to-day by their action in joining the church. It is hard to tell how many have said so by uniting, but probably thirty thousand have said so who are now living; perhaps there have been ten thousand of the old stock.

I don't know how many of the old original stock are at Salt Lake. There are probably one hundred and fifty thousand that are in Utah that are members of the church there, but there is not a great many of the old stock left there.

We claim that the law of the church is contained in the Bible, the Book of Mormon, and the Book of Doctrine and Covenants; and we claim that the Hedrickites do not practice it as it is laid down there; and we claim that the Salt Lake people and the members thereof do not teach and practice it as laid down in the standard works. We make the same claim as to the Baptists, the Campbellites, the Presbyterians, Methodists, and all these other denominations. Yes sir, that is what we claim. Yes, sir, in so far as being organized into the body of Christ is concerned, we claim that we are in advance of the rest of the world, that is all.

All the Reorganized Church has had to do with that class of indi-

284 viduals who undertook to teach or practice polygamy was in the way of repudiating and denouncing it as undoctrinal, unscriptural, and most destructive and pernicious in its effects; and wherever we have met with it in the church, it has been denounced in the strongest terms possible. The Reorganized Church denounced it in 1852. It adopted, by resolution and vote, the Bible, the Book of Mormon, and the Book of Doctrine and Covenants as containing the law then binding in the church, and a committee was appointed to write and publish a book denunciatory of polygamy, which was done, and that was a pamphlet called "The Word of Consolation to the Saints."

None of these people were of our membership. It was well understood that we excluded all such parties as had any affiliation with a church teaching or practicing polygamy. By the words *excluded from our organization*, I simply mean that when they made application, or if we found a person who by any means had become a member of the church who still indorsed polygamy, they were removed for cause. They were excluded, and all who held to the doctrine or practice of polygamy were not permitted to become members if it was known that they indorsed polygamy; and if by any chance they did become members, they were immediately cut off—excluded. And if persons did become members who indorsed that doctrine, they were excluded for it too—turned out of the church, I mean.

There were some who advocated the doctrine privately, and we believe, practiced it secretly; they too were excluded. Yes sir, I say they were all excluded, and in my testimony, I had reference to those who fell under my particular observation. So far as I know, everyone who at all practiced or indorsed these heresies have been excluded.

I did not say in my testimony that we received people into the church after they had practiced or indorsed the doctrine of polygamy. I have said that we did not, and have always said that if by chance such persons did become members, and did not abandon it, they were promptly excluded.

The process followed in bringing them to answer for violation of
285 the church laws is owing to the nature of the offense. If it is a personal offense between individuals, the offended party is required by the law of the church as laid down in the New Testament and in the Book of Doctrine and Covenants, to go to the offender and seek for a full understanding of the matter in question, and seek a reconciliation, and if he fails in the first effort, he is to take some faithful person with him, a member of the church, and make the second effort, and in case this second effort is also unsuccessful, he delivers the matter in question over to the ministry, the elders of the church, for them to proceed according to the law of the church as contained in the New Testament, the Book of Mormon, and the Book of Doctrine and Covenants.

We have a method of inviting persons who are under charge to

appear for trial. We do not try a person without notice unless the person absconds or puts himself beyond the reach of personal notification, in which case he will be proceeded against as if he were present. That is done only in cases where it is discovered that the accused is making an effort to keep himself out of the way of personal notification, but not otherwise.

286 When delegates present themselves at our conferences, we require a certificate from the body they represent, duly and properly signed. There is no variation from this rule except in cases where they have lost their credentials; then they can be identified as delegates by the testimony of witnesses who know of their selection, or by any other competent, legal proof that will identify them as duly accredited delegates. The work on the subject of representation provides for the manner of selecting delegates and the course to be pursued to determine whether the party presenting himself is a delegate or not.

287 Yes, sir, I said in my testimony yesterday that the Reorganized Church claimed to be the successor of the original church by virtue of the similarity of doctrine. It is owing to the sense in which the word *doctrine* is received, whether we have other claims. The term *doctrine* in its broad sense relates to the matter of teaching, and the word is derived from the Latin *doceo*, which signifies to teach; and taken in that sense, we have other claims. We hold, as stated yesterday, that the doctrines of faith and repentance, and baptism by immersion, under the conditions provided for in the gospel teaching, and the laying on of hands as set forth in the Bible, the Book of Mormon, and the Book of Doctrine and Covenants, and the doctrine of the resurrection of the dead, the just and the unjust, the doctrine of eternal judgment, that all the race would be rewarded according to their works by God,—that this constitutes what we denominate the first principles of the gospel.

Besides this, there are various other matters growing out of the organization of the church, and these fundamental doctrines that are really germane to the question of doctrine, and they constitute, in some sense, a part of the doctrine, and in a proper sense too. The Reorganized Church has a similarity to the original church in respect to its organization, its officers, its ordinances, its ceremonies, its moral teachings, and spiritual graces and gifts and blessings promised under the gospel order. We regard these as all being distinctive and essential parts of the church in its general work.

The fact that Joseph Smith, the President of the Reorganized Church, is a son of Joseph Smith who was killed at Carthage, is one feature growing out of the church work, from the fact that it is in harmony with the precedents contained in the Bible and the Book of Mormon pointing to that order of things, and that the prophecies and promises contained in the Bible, the Book of Mormon, and the Book of Doctrine and Covenants declare the law of lineage as the governing principle in the transmission of office; that is, the office of

the First Presidency of the church. The law that I cited yesterday is a law that we consider established by the precedents contained in the Book of Mormon, and the Bible, and the Book of Covenants. We claim something for the succession by reason of the revelations. The laws I have cited are given by revelation—the laws I spoke of governing lineage. The revelation of 1841, January 19, in the eighteenth paragraph, in connection with other paragraphs, provided for the First Presidency of the church; and in the eighteenth paragraph specially, that "the head" of Joseph's posterity (which we claim to be Joseph's eldest son) was to receive the same blessing.

We claim in favor of the succession of Joseph Smith to the Presidency, a prophetic appointment by his father. We have it in the journal of Lyman Wight, one of the Twelve of the original church, that he was so set apart by prophecy and blessing that he would be his future successor. That is one of the circumstances under which we claim it, or I should say, one of the proofs.

The fact that Joseph's father did indicate by prophecy and by prophetic blessing that his son would obtain the same office that he held in the church, would be a prophetic appointment. The revelation by which that appointment was made is in the Book of Doctrine and Covenants, in the revelation of 1841, and is a part of the Book of Doctrine and Covenants. That is only in pursuance of which the ordination was made—the ordination to which I have just referred. There were two ordinations; the latter took place, from the testimony of members of the church who claimed to know, in 1844. That had been preceded, however, by a similar prophetic blessing; I think it was in 1839. It was when Joseph Smith was incarcerated over here in Liberty Jail, in Clay county, Missouri. The ordination or appointment about which I have been speaking was just simply a prophetic blessing as I have already stated. I did not state it was an ordination in the ordinary sense of that term; I simply said it was a prophetic blessing and an appointment. Whether that prophetic blessing was based on the revelation given in 1841 or '39, I cannot say.

The reorganization elected him to the Presidency of the Church April 6, 1860. That ordination was based, first, upon the law of lineage; and second, on the prophecy to which I have alluded. I mean the prophecy in the Book of Covenants in regard to the "seed of Joseph," or the "head of his posterity"; and based furthermore upon the inspired utterances that were delivered by members of the church in Northern Illinois and in the State of Wisconsin as early as
289 1851; or I should say, prophecies that were delivered in Illinois and Wisconsin as early as 1851, and also that were delivered from that time along down until 1860, all pointing to the fact that Joseph Smith would come to the church and become its President.

These prophecies of which I speak were not submitted to the quorums for their action, simply because they came in the nature of prophecies, not as revelations of law. They simply came as

prophecies, were not necessary to be submitted to the church for action, as prophecies were not rules of conduct for the guidance of the people. They were simply indicative of what would come to pass in the future, like all prophecies; that was their function. In
290 some senses they were regarded as authoritative or as precedents, in the sense of indicating, as we believed, by the divine will, what was to be, and what would be. These prophecies were received in a similar manner to what we belive prophecy was received in the days of Christ and the apostles. The Reorganized Church regards prophecies of that kind as simply an exhibition of the divine favor and divine will in respect to matters treated of in the prophecy. It is a rule in the Reorganized Church to do in regard to those things as St. Paul instructed in his time when he says the saints may get together and hear the prophets, two or three at a time, and they may consider whether the prophecy is genuine or not. The accepted law of the church is made the basis in all these matters. Prophecies coming that are in harmony may or may not be accepted as a rule of action. It is left for the body to decide whether or not that shall be the case, or as to what shall be done.

291 The reorganization in 1852 was based partially upon prophecies delivered through different ones prior to that time, and after 1844. The reorganization was based upon the law and usages of the church simply. The prophecies spoken of were simply pointing forward to the event of the reorganization, or leading up to it. The conference of 1852 recognized the prophecy or revelation given through a high priest named Henry H. Deam, and acted upon it. The body of the people sat in judgment upon it, and sought for especial guidance, and believed that they as a body received evidence as to its truth. The high priest, Deam, who received this revelation, belonged to a branch of the church,—I think the branch at Zarahemlah,—but it might have been the Yellowstone branch. That revelation was submitted to the whole body; the whole conference that was there at the time. Yes sir, I mean the conference of 1852. I think it was submitted first to a body that was present there, and then they came together again, and it was resubmitted to the conference. I do not know but that it was submitted twice or thrice. They were there in session for several days before they attempted to effect a reorgani-
292 zation in any respect. I refer to the body that was present at the time the revelation was given. It was a body composed of high priests, and the seventy, or members of the seventy, the elders, priests, teachers, deacons, and members. I could not say that these people of whom I have just spoken were embraced in the reorganization at the time or not. I could not say they belonged to any organization except it was a branch organization. Some of them had been associated with the Strangites, and they had withdrawn entirely so far as any organization is concerned, and were standing separate and alone. These people who met in 1852 organized a church in pursuance of a revelation which was received as authoritative by a

body of people assembled. These people—who were present at the conference of 1852 when this revelation was delivered—these priests and other officers, claimed to have received their ordination or priesthood in the days of Joseph the Seer at a time before his death in 1844. The high priest who received the revelation at the time spoken of was a high priest in authority on that occasion.

I would not undertake to say who presided at that conference. I was not present at the time; did not unite with the church until 1857, and what information I have is derived from reading and from common report. The revelation became the authority for the reorganization because it came to the body of the people that were present on that occasion, and after an examination of it and seeking for what they denominated the evidence of its truth, they became satisfied that it was the will of God; and I believe it is recorded there that it
293 was the unanimous consent of the body to that effect, that it was the will of God and his Spirit that spoke. I can recall the names of
294 some of the persons who were present at the time this revelation was given, both as related in the history and those with whom I have conversed, and from these sources I gather that Zenas H. Gurley, Sr., H. H. Deam, Jason W. Briggs, Cyrus Newkirk, and I think W. B. Razey and one John Herrington, were present.

The book of Doctrine and Covenants in connection with the Book of Mormon and New Testament teach that God may reveal his will through the humblest instrument in the church, or even out of the church, and if that body accepts it as being a divine revelation, they may act upon it. The Reorganized Church may be mistaken about the authority of this meeting, but I think we were not mistaken and that the proceedings of that conference were in conformity with the teachings of the Bible, the Book of Mormon, and the Book of Doctrine and Covenants. Now that is the way we view it; but of course, in all things human, people as a matter of course may be
295 mistaken. In the actions of humanity they are always liable to err. We hold that the persons present at that conference not only exercised their natural judgment, but they exercised their judgment at the time as best they could under the circumstances, guided and instructed by the divine power, to arrrive at a true conclusion. That is what we believe, and at the same time they were guided and enlightened by a manifestation of the Spirit of God, as was promised by Christ to his disciples who would seek earnestly after the truth, that guidance should be given them. That is our position, and we believe that as faithful followers such guidance was given as was promised by Christ, and afterwards by St. Paul when he says, "He that is spiritual judgeth all things;" "the things of God are known by the Spirit of God." We claim that under these circumstances they had the evidence, and besides that they had the enlightenment, that is given by the Holy Spirit to inform and enlighten their judgment and their minds.

The Reorganized Church regards this revelation as one of its fun-

damental laws; it was received as such, and acted upon as such. There was such a law in the church in 1834. This was a revelation given to the church indicating that the time had now come for them to act in conformity with the law and order of the church in the reorganization of the material that there was at hand. They did not make a president in 1852, or at any subsequent conference prior to
296 1860, except in the sense of a representative of the Presidency. From 1852 down to 1860 the church had simply a president who stood as a representative of the President, until the proper President of the Church, who was to be a prophet, seer, and revelator, was called. It had a president like that simply by choosing the highest authority present to preside. We generally used the highest authority present to preside, but I don't know that we always did. The reason Jason W. Briggs became the presiding officer of the conference of '52 as I understand it, was that Mr. Deam became defected before the final choice was made, and Jason W. Briggs was the next highest man in authority. The choice of president, as I take it by reference to the minutes, occurred October 6, 1852, because I see here a resolution offered and carried, "Resolved, that in the opinion of this conference the one holding the highest priesthood in the Church of God is to preside and represent the rightful President, and the high priesthood." And then comes an amendment as follows: "Resolved, that the highest authority amongst the priesthood represents the legitimate President as the presiding authority;" and I find here that Jason W. Briggs presided over the conference. The probabilities are that he was decided upon as the one holding
297 the highest authority. That was the resolution, and the presumption is that the people there acted upon that resolution. I think Deam was excluded from the church at about that time.

At that time they only had branch organizations. They were just then taking the preparatory steps with a view to reorganizing the church, and these were some of the preliminary steps that were being taken. The rule that we attempted to be guided by is that the person highest in authority present has the right to preside, but notwithstanding the fact that he has the right to preside, he must first be chosen by the body. That is the way we understand it. The body has a right to reject the highest officer. Yes, sir, it has the right to prevent him from presiding. That is done for the reason that the law of the church requires that everything shall be done by common consent of the body. The body would have the right to reject its First President as its presiding officer. I base that right upon the requirement in the law that the First President of the church shall be appointed by revelation, and then he shall be chosen by the body, and be sustained and upheld by the faith, and confidence, and prayers of the church. Usage has been that where the presiding officer takes his place in a conference, he does so upon motion and action of the body.

Now you asked me for an instance where they had rejected the

president. It was in the case of Sidney Rigdon, who was one of the first presidents of the church, and there was an effort made to eject him from the First Presidency, but it was overcome, and he was continued. He was not rejected, but it was acting upon that principle. He might have been ejected. They elected a man president or presiding officer of that conference that belonged to a branch at the time the body was attempting to take steps looking to the future reorganization of the church. He was in the movement of the reorganization and may be said to have belonged to it. It was just a promiscuous assemblage that had gathered together upon notification with a view to reorganize at some future time. The presiding officer was a member of the old church and a minister up to 1844 and it is reported that he united with the Strangite faction and afterwards he united with the William Smith faction, from both of which
299 he withdrew. He withdrew first, and upon that withdrawal action was taken. I don't know what that action was, but I know that I belonged to that same faction then myself. That was the William Smith faction—William B. Smith. I had something to do with his withdrawal in common with the rest. He was charged with what we termed apostasy or defection.

300 I cannot explain fully what the revelation of 1851 was because it was not in my possession, but some features of it I can remember, and that was with reference to young Joseph Smith's being eventually called to the Presidency of the Church. It is a fact that at that time I repudiated that revelation. I repudiated it and did not believe it. I have changed my opinion since that time, most decidedly I have. The revelation of 1851 that I refer to was given by Jason W. Briggs. The revelation given through Jason W. Briggs pointed out the fact that God had not changed concerning the upbuilding of his church nor in regard to the law to govern it, stating the further fact that Joseph, the son of Joseph the translator, seer, and revelator, would eventually be called to the Presidency of the Church.

These were items of it, I remember distinctly. There was also something in it that denounced polygamy and denounced it in the very strongest terms. That is my memory now. It was not necessary for William Smith's organization to accept that revelation because it denounced polygamy, because William Smith's faction was just as bitter against polygamy as was the revelation itself. The faction that William Smith led was just as bitter against polygamy as was the revelation itself, if not more so, and for that reason it was not necessary to accept it on that account. At that time, I did not believe William Smith to be heir to the Presidency. I do not know that that opinion was held, rather think it was not, but I cannot say, for I had at that time only been indentified with the church a short time and knew little with regard to many points, at least in regard to church government.

I held the office of an apostle in the William Smith faction of the
302 church. My apostleship was not recognized by the reorganization

to which I now belong. It was repudiated. Nothing was done with it. It simply was not recognized, simply repudiated. I was appointed apostle in the Reorganized Church in 1858. My appointment was claimed to be by revelation in the Reorganized Church, and so far as my own person was concerned I am satisfied that it was. The first prophecy in regard to my apostleship came through Edmund C. Briggs, and afterwards to myself personally. That authority consisted of authority that indicated to my intellect and inner consciousness, through the operation of a power outside and independent of myself, which gave me the comprehension and assurance that I was called. That was the way it appeared to me, and I do not know that I can indicate it to you any clearer than that. It was addressed to my conscious intellectual being, and my intellect was convinced and I formed a judgment thereof based on the effect that this power had on my intellect and inner consciousness. My case was presented to the church and by a vote was adopted, and I was received and ordained according to the usages of the church.

It is not a fact that prior to 1844 in the original church that all revelations and prophecies pertaining to the office of the apostles came through the Presidency of the Church. The Book of Doctrine
304 and Covenants shows that the case that I allude to is a matter of history and one of revelation too, in which Oliver Cowdery, David Whitmer, and Martin Harris were selected to select the Twelve. They were appointed to select the original Twelve according to the spirit of revelation and wisdom. That is given in Exhibit E on page 172. That tells in the quotation to whom it was given. It was not given to the First Presidency, for there was no Quorum of First Presidency established then. Joseph Smith was first elder, but there was no church organization then, no church organized at that time whatever. This was in June, 1829, and that was before the church was organized, because it was not organized until April 6, 1830, and Joseph Smith and Oliver Cowdery were not recognized by the conference and assemblies that convened as belonging to the First Presidency.

Oliver Cowdery was never one of the Quorum of First Presidency. Joseph Smith was, and Sidney Rigdon was, and Frederick G. Williams and others were.

I can testify positively that the doctrines of the Reorganized Church and the doctrines of the original church are the same simply by comparing what was written in the Book of Covenants, the Book of Mormon, the Bible, and the history as found in the records and ordinances of the church. That is what I claim and upon examination we substantiate that to our own satisfaction. We may not satisfy you, Colonel, but to our own satisfaction, we are perfectly suited with the comparison. I am by reading particularly acquainted with the history of the Reorganized Church from 1851. Both by reading and personal contact.

I am acquainted with the history of that organization. I am ac-
308 quainted with the history of that organization written by Tullidge. He claims to give some of the outlines, but his alleged history was never accepted by the reorganization. There were certain parts of it that were never indorsed or believed by the Reorganized Church. The Reorganized Church did not publish that work as the authorized work of the church. It was published simply for what it purported to be,—Tullidge's History, nothing more and nothing less. They put it forth as Tullidge's work by the Board of Publication. What is in that work claimed to be a matter of history and Tullidge embodied it in that work, but it was published by the Board of Publication on its own merits simply and without the approval of the church.

The Board of Publication publishes a great many things that are not authorized by the church. They are published simply and solely for what they are or what they purport to be. The Reorganized Church did not employ Tullidge to write the history of the reorganization. He had a work that was published in Utah called "The Life of Joseph the Prophet" and he brought it to Plano in order to dispose of it and failed to do so. He finally remodeled it and it was published as Tullidge's views and Tullidge's work, and not the history of the reorganization accepted by the church, because the church never did accept. At that time we had a man appointed as historian for the church and he was collecting material to publish the history of the church. In that work Tullidge got in some things that were a part of the history of the reorganization. He got it from various sources, copied some from the writings of Zenas H. Gurley.

I became a member of the Reorganized Church in 1857, was baptized by Zenas H. Gurley, Sr. I do not suppose that over fifty or sixty persons belonged to the Reorganized Church at the time I became a member. I don't know really how many there were, but I
309 think that was about the number. I can only give an approximation as to the number of members in 1860, but I should judge there were three hundred; that is, in the spring, I mean.

Yes sir, they had the same rights as the present church of twenty thousand, if I understand you. First we were seeking to build upon the principles contained in the Bible, the Book of Mormon, and the Book of Covenants. Upon the presentation of Joseph Smith and his ordination, we considered the church then in a more perfect organization than it had been in previously. Up to that time there had been a temporary president only.

310 Our understanding is that the property of the church belonged to the church; that is, it belonged and belongs to the church which has adhered to and practiced the doctrine and ordinances of the original church. The church in 1860 had the same rights to the church property that it has to-day. The amount of members cuts no figure, that is my opinion about it simply.

At the time young Joseph Smith was ordained as President of the Reorganized Church, I should say that there were more than one

thousand at that time that were members or had been members of the original church. I cannot say what proportion of the membership of the Reorganized Church now were members of the original church, but a great many members of the old church who did unite with the Reorganized Church since 1857 have died. They were generally old people then and they would be old people in the very nature of things now. A great many of them have died, but notwithstanding that fact, there are a great many members of the old church who are to-day members of the Reorganized Church. I would not attempt to say how many, approximately somewhere in the neighborhood of a thousand, I should say. Possibly that estimate is too large and upon reflection, I am inclined to think that it is too large, but still it may be even more than that.

311 Alexander H. Smith, Joseph R. Lambert, T. W. Smith, J. H. Lake, James Caffall, Heman C. Smith, William H. Kelley, Gomer T. Griffiths, E. C. Briggs, and Joseph Luff compose the twelve apostles of the Reorganized Church at the present time. There are only eleven members now. The Reorganized Church never did have twelve that I am aware of. In the original church when the quorum was first organized, they filled it, I believe, but there were vacancies occurring now and then and sometimes vacancies remained unfilled for some time. They filled them from time to time. I am not positive that there was a full quorum at the death of Joseph Smith. It is a fact that the Quorum of Twelve is an important part of the Reorganized Church. It is one of the most important quorums in the church. It is so whether it is full or otherwise. I think we have kept the quorum filled like it was in the old church as nearly as possible, all things being considered. We have not filled up the quorum simply because it has not been indicated. The membership of the quorum is indicated sometimes by prophecy, sometimes by revelation, either way.

The Twelve in the Reorganized Church have been appointed in the same way as the Twelve were appointed who were in existence
312 in the original church at the time Joseph Smith was killed in 1844. I think identically in the same manner. It was not the doctrine of the church up to the time of his death that the Twelve must be appointed by revelation, because the first Quorum of Twelve was selected by Martin Harris, David Whitmer, and Oliver Cowdery. That was done in pursuance of a commandment delivered or given in 1829, nearly six years before the quorum was called and before any church was organized.

The function of the Quorum of Twelve is, first, the preaching of the word and the disseminating of the gospel abroad to all the world, first to the Gentiles and then to the Jews, and labor in the midst of the various congregations in the church outside of what we denominate the Stakes. Their ministry is in respect to all spiritual affairs, the same substantially as it was in the days of Christ and the apostles; giving to them substantially the same powers in proclaim-

ing and preaching the word that was given to the Twelve Apostles by Christ. This is the way we understand it. Their functions do not include the temporal affairs of the church only to watch over them and see that there is no maladministration. They are not the custodians nor the distributors of the temporal affairs of the church, but they simply had a supervisory oversight over the affairs of the church in general. It is one of the duties of the Twelve in the Reorganized Church with reference to the matter of tithing, simply to see that it is properly taught; that is, the law is properly taught. We have never understood it to be a part of the duties of the Twelve to execute the law of tithing, their duty is simply to see that the law
313 of tithing is in the law of the church and its execution is left with other parties. The Bishopric has charge of the execution of the law; that is, the law of tithing; that is, the Bishopric is to do its part in holding and distributing it.

None of the members of the Twelve in the original church at the time Joseph Smith was killed have been members of the Twelve in the reorganized church, nor has there ever been, with one exception, a son of any member of the original Twelve a member of the Twelve in the Reorganized Church. That exception is in the person of Alexander H. Smith, who was a son of the chief apostle of the church. He is a member of the Reorganized Church and a member of the Quorum of Twelve. His father was never a member of the quorum that was organized in 1835.

According to history, the Twelve that existed at the time of the
314 death of Joseph Smith, one of these members, Lyman Wight, went to Texas, carrying quite a large section of the church with him. He remained there for quite a while and died, and that body of people, most of them, came back and united with the Reorganized Church. William Smith was one of that quorum and he abandoned Brigham Young and his followers at Nauvoo, I think in '44, possibly it was in '45. He carried off some of the people with him, not many of them, but some of them. Then there was John E. Page, who was another member of that quorum. He abandoned them at Nauvoo and united with James J. Strang and remained with that faction a short time, and the others were reported to have gone to Utah. My information is that there were but three that did not go West with the Utah Church. Part of them were living at the time of the reorganization of the church in 1852, but I do not think they all were. I think Willard Richards died about 1856. He was one of that quorum.

The members of the Quorum of Twelve who went to Salt Lake with Brigham Young were not entitled to recognition as members of the Quorum of Twelve in the Reorganized Church in 1852 simply because they had abandoned the faith and doctrine of the old church on some of its vital points; in other words, they had apostatized. The same is true with William Smith, and Lyman Wight who went to Texas. They had abandoned the original church doctrine also. I don't know that any tribunal ever tried them and decided that they

315 had abandoned the doctrine, unless it be the Reorganized Church. That did in its public records. We decided it on the ground that they had imbibed or practiced doctrines that were foreign to the doctrines of the church. The only record we have on that subject is in the sense that we affirmed and reaffirmed from 1852 clear down to the present time that the doctrines in the Reorganized Church are the doctrines taught in the Bible, the Book of Mormon, and the Book of Doctrine and Covenants, the edition that was published at Nauvoo. It is a fact that while the members of the original Twelve were alive the Reorganized Church appointed another and a new Quorum of Twelve; that is, some of them were alive.

The Reorganized Church is the same as the old church with respect to its adherence to the books that were the standard in the old church in the days of Joseph Smith. Yes, sir, there were two Quorums of Twelve. As far as their persons were concerned, the ones that were members of the old quorum, with the exception of the ones I have mentioned, were in Utah, or the ones that were alive were there, but they had forfeited their right to act as a quorum by reason of their adopting new doctrine and practicing it that was contrary to the teachings of the church at the time of the death of Joseph Smith and prior thereto. They had abandoned the church by abandoning its doctrine. The quorum in the Reorganized Church accepted as their doctrine the doctrine taught and practiced in the original church; that is, the original faith and doctrine that was formerly adopted by the original church was reaffirmed. The new Quorum of Twelve was entitled to authority in the church for the reason as I have already stated that the old quorum had abandoned the fundamental, or I should say, vital questions of doctrine in the church, while the new quorum reaffirmed and stood by the doctrine in its purity as taught and practiced in the old church. The old quorum, we hold, forfeited their rights by their action. The Reorganized Church and every individual in it for himself decided the question that the old quorum had abandoned the doctrine of the church.

316 The Quorum of Seventy in the Reorganized Church and in the original church is a traveling ministry, the active gospel ministry. The Presidency of the church from 1851 to 1860 was simply representative. It was a *de facto* Presidency and a Presidency representative of the rightful heir, just as is shown in the record, but the officer holding that position did not exercise the powers and functions and rights of the President excepting in matters that related to the Presidency in conferences and assemblies, such as signing licenses and the like.

317 The circumstances of the ordination of Joseph Smith at Amboy by the Presiding Elder or President of the church was simply this: He delivered an address which was taken down in longhand by the editor of the Amboy *Times*, and at the close of the address he stated to the people that if the same Spirit which prompted his coming

there, prompted them in receiving him, that he would become identified with them and take his father's place; and upon this, a motion was made by one of the conference, that he be received and ordained to that office and calling. It was then put and the motion carried unanimously, and the President of the conference, Zenas H. Gurley, Sen., selected William Marks, Samuel Powers, and myself to act with him in the ordination, and he was ordained according to the formula of the church to the high priesthood and to the prophetic office and Presidency of the Church. That is substantially the way in which it was done, but of course I have not given every little detail of action and what was spoken, but that was the way it was done substantially. He was ordained first to the high priesthood. He was made a high priest first and then ordained to the office of the Presidency of the Priesthood; that is, to the Presidency of the Priesthood and the Presidency of the Church and invested by virtue of that ordination with all the powers, prerogatives, and rights that belong to that position. It was all embraced within the same motion and done at the same time.

He was chosen at that meeting to be a high priest. He was accepted as a member of the church at that meeting. He was received upon his original baptism as baptized by his father in 1843 or '44, I am not sure which year it was, but it was one or the other of these years. I do not know of my own knowledge that he was baptized at that time, I did not see him baptized. He was not baptized again, for it was not necessary, as all members in good standing in the original church are received in the Reorganized Church on their original baptism if they are of good moral character. I have stated that it was on that occasion that he was received as a member of the church; on the same occasion; I mean the same conference. I will not be positive but that he was received as a member of the church the night before; I think perhaps it was upon this same occasion though. The motion as I now remember it was to the effect that he be received; that is, that his claims be received and that he be ordained to the high priesthood, and to signify that he be ordained a high priest and to the Presidency thereof and to the Presidency of the Church.

318 The usage and law of the church, as we interpret it and apply it, is that a person may be called and ordained to an office and then be immediately ordained to another office and all be embodied in the same motion. For example, take the case of a person called to the Quorum of Twelve; he may be ordained first to the office of high priest and then following that, he may at the same time be ordained to the office of the apostleship. We understand that a motion covering these points of the ordination of a person as a high priest and also as President of that Priesthood, indorsed by the conference, gives the authority to act, and it would give the authority to elect a President or a high priest from any member of the church. We claim
319 that a man may be ordained to the high priesthood and to the Presi-

dency of the High Presthood by a vote on any one motion, provided of course the motion is one that covers the ground that he be ordained to the Presidency of the Priesthood. We claim that it can be done in that manner, because in the motion he would first be elected to be a high priest, and the election of the party to the Presidency would be electing one from the high priesthood, for the first step taken would be his election to the high priesthood, which would place him in a position to be elevated to the First Presidency.

I do not claim this rule simply because it was the course pursued with Joseph Smith the President of the Church. We claim it to be legitimate, and such is the usage of the church. That is a legitimate course. I cannot say what was done in the original church because I was not with it. I do not know that there has ever been an occasion like that in the Reorganized Church, cannot say. Yes, I recollect an instance. It is in the case of David H. Smith, if my memory is not at fault. He was not a high priest until he was chosen to be one of Joseph Smith's counselors; second counselor, I think it was, and I think that was the usage in his case. He was appointed second counselor on motion of Joseph, and then he was ordained. That is my recollection, that he was on motion of Joseph chosen to be a counselor of the President, and that motion was carried and he was so ordained, first to the priesthood, and afterwards in the same ceremony to the high priesthood.

The same usage has been followed in respect to calling and ordaining the bishops, who are required to be high priests. There have been some instances of that kind. We claim that this usage is in harmony with the spirit and genius of the law, and according to our judgment it is according to the law, and we base that claim upon the fact that the body of the church has a right to interpret that law.
320 We claim that the church is the highest interpreter of the law and has a right to interpret it in applying it to these matters. I mean that the church, the organized body of the church in conference, is the highest authority and has the only right to interpret the law. Yes sir, I mean the Reorganized Church. In respect to our own affairs, we claim that the church in conference assembled is the highest authority or tribunal that can possibly be in the church. That was the law in the original church, and the usage, too. I do not know that it is higher than revelation, but in order for revelation to be binding on the church, it must be accepted by the church.

Yes, sir, you understand me to say that the church now claims the right to receive or reject revelation, and the church always claimed that right. It has the power now just as it did in the days of Moses when the law was given at Sinai on the tables and he had to present and read the statutes in the hearing of all the people; and when it was done, the people said, "We accept that for us and for our children;" and when that was done, he dipped the hyssop in the blood and sprinkled the people and it became a binding ordinance between God and the people of Israel. That was the law in the days of Moses

and we hold that it has held good ever since and is a very wholesome thing. There is no law of the church until it is accepted by the people. They have to accept it before it can become a law, and that was the principle that was laid down in the very foundation, because Joseph Smith and Oliver Cowdery claimed to be called to be ministers and teachers in the church and the same commandment came to them, but they had to wait until they got the consent of the people before they could lawfully fulfill the functions of these offices. That was at the very foundation of the church. and we find that law laid down in the commandment that they were not to do these things unless they got the consent of the people. That is what the law itself says, and they had to wait until the 6th day of April, 1830, before they could take unto themselves these functions. That was a principle that was established at the very foundation of the church and has been carried out ever since. That is where the common consent of the body comes in; in other words, where the voice of the people comes in. I do not know of any law or rule of the church by which a revelation becomes a law and binding on the people, until it has been first submitted and accepted by the church, do not know of an instance of that kind. I do not know an instance of that kind in the original church prior to 1844. The Book of Doctrine and Covenants was accepted after that manner and it went away back to the very foundation of the church, for it was a foundation principle.

321 In February, 1831, the ministry was called together to decide what they would accept as the word of God and in 1835 there were selections from the revelations compiled into the Book of Doctrine and Covenants. They passed from quorum to quorum and after having gone through the quorums and received their unanimous indorsement, it went before the entire body assembled, both ministry and membership, for their final acceptance. I don't know whether the revelation of February 24, 1834, ever passed through the quorums or was passed by the body of the people. It was given in 1834, but whether it is in the Book of Covenants received by the church in 1835, I cannot say. All the revelations contained in the Book of Doctrine and Covenants up to 1852 were indorsed by the entire body that was present at the time of the reorganization of the church. They indorsed it and accepted it by official action.

The revelation of July 23, 1837, was accepted by the Reorganized Church; it was accepted in the acceptance of the Book of Covenants, in which we find it published. It was accepted in the original church by the quorums in 1835 for the reason that the rule is laid down in their publications and it would not be there if it had not been accepted. I cannot state any other time when it was formally accepted. There is another revelation of 1841 that we find published in the church organ. I am not prepared to say how it was received nor when. We find it in the church organ published in 1841 and afterwards in the Book of Covenants that was published at Nauvoo

in 1845. The Reorganized Church accepted the Book of Doctrine and Covenants as it was universally published, on the theory that it had passed the examination that was provided and required for the acceptance of revelation before it could become a law of the church and binding on the church. That is the theory the Reorganized Church proceeded on, that it had been accepted in accordance with the law and usage of the church, and the Reorganized Church reaffirmed for themselves that they accepted it as the law that was binding upon the original church and therefore binding upon the Reorganized Church. That was done in 1852 by the Reorganized Church and has been done time and again thereafter in their General Conferences.

All revelations that were general laws to the church were published in the Book of Doctrine and Covenants. There may have been some special commandment or special promise or something of that kind that was not published, but those that were received as a general law of the church for its general government and guidance, they had to come before the entire body of the church and be accepted before they would become laws binding upon the church. That has been the case with all the laws that have been published since the reorganization; that has been the rule followed. There is no law or commandment in the church to the effect that
325 the church shall receive all of Joseph Smith's revelations. The church was to receive only those that the church was satisfied came from the Holy Spirit. That direction was manifestly applied to all revelations. No, sir, the church would not be under condemnation if it refused to accept or if it rejected a revelation of Joseph Smith's.

RE-EXAMINATION.

It is possible that revelations may be presented to the proper quorums and then to the body of the church and be accepted and still not appear in the printed book. It is in some cases a question of propriety, unless the conference should take some action upon it and
226 demand that they be published. That is a question that would depend upon those who had charge of the literary concerns, as to whether they should be published or not, unless the conference especially directed their publication. Before any are published, however, there must be an order of the conference directing their publication. That is true in the Reorganized Church. I don't know what the rule was in the former church. The authority for the organization of certain quorums about which I testified in my cross-examination, is found in the Book of Doctrine and Covenants, Exhibit E, section 43, and from the fifth and sixth paragraphs of that section. They read as follows: Paragraph 3:—

"And now Oliver Cowdery, I speak unto you, and also unto David Whitmer, by way of commandment: for behold I command all men everywhere to repent, and I speak unto you, even as unto Paul mine apostle, for you are called even with that same calling with which

he was called. Remember the worth of souls is great in the sight of God: for behold the Lord your Redeemer suffered death in the flesh: wherefore he suffered the pain of all men, that all men might repent and come unto him. And he hath risen again from the dead, that he might bring all men unto him on conditions of repentance. And how great is his joy in the soul that repenteth. Wherefore you are called to cry repentance unto this people. And if it be so that you should labor all your days, in crying repentance unto this people, and bring save it be one soul unto me, how great shall be your joy with him in the kingdom of my Father."

Paragraph 5: "And now behold, there are others who are called to declare my gospel, both unto Gentile and unto Jew: yea, even twelve: and the twelve shall be my disciples, and they shall take upon them my name: and the twelve are they who shall desire to take upon them my name, with full purpose of heart: and if they desire to take upon them my name, with full purpose of heart, they are called to go into all the world to preach my gospel unto every creature: and they are they who are ordained of me to baptize in my name, according to that which is written; and you have that which is writen before you: wherefore you must perform it according to the words which are written. And now I speak unto the twelve: Behold my grace is sufficient for you: you must walk uprightly before me and sin not. And behold you are they who are ordained of me to ordain priests and teachers to declare my gospel, according to the power of the Holy Ghost which is in you, and according to the callings and gifts of God unto men: and I Jesus Christ, your Lord and your God, have spoken it. These words are not of men, nor of man, but of me: wherefore you shall testify they are of me and not of man; for it is my voice which speaketh them unto you, for they are given by my Spirit unto you: and by my power you can read them one to another; and save it were by my power, you could not have them; wherefore you can testify that you have heard my voice, and know my words."

Paragraph six: "And now behold I give unto you, Oliver Cowdery, and also unto David Whitmer, that you shall search out the twelve who shall have the desires of which I have spoken; and by their desires and their works, you shall know them: and when you have found them you shall show these things unto them. And you shall fall down and worship the Father in my name: and you must preach unto the world, saying, you must repent and be baptized in the name of Jesus Christ: for all men must repent and be baptized; and not only men, but women and children who have arrived to the years of accountability."

227 About the authority for organizing the high priests and the seventies, about which I was interrogated in my cross-examination: The law for the same is found in Exhibit E, section thirteen, paragraphs 8 and 10, as follows: "If thou lovest me thou shalt serve me and keep all my commandments. And behold, thou wilt remember the

poor, and consecrate of thy properties for their support, that which thou hast to impart unto them, with a covenant and a deed which cannot be broken—and inasmuch as ye impart of your substance to the poor, ye will do it unto me—and they shall be laid before the bishop of my church and his counselors, two of the elders, or high priests, such as he shall or has appointed and set apart for that purpose."

Paragraph ten: "And again, if there shall be properties in the hands of the church, or any individuals of it, more than is necessary for their support, after this first consecration, which is a residue, to be consecrated unto the bishop, it shall be kept to administer to those who have not, from time to time, that every man who has need may be amply supplied, and receive according to his wants. Therefore, the residue shall be kept in my storehouse, to administer to the poor and the needy, as shall be appointed by the high council of the church, and the bishop and his council, and for the purpose of purchasing lands for the public benefit of the church, and building houses of worship, and building up the New Jerusalem which is hereafter to be revealed, that my covenant people may be gathered in one in that day when I shall come to my temple. And this I do for the salvation of my people."

The date of the revelation I have just read is February 6, 1831, according to the history. On the same subject, Exhibit J, being the minutes of the organization of the High Council of the Church of Christ of Latter Day Saints, Kirtland, February 17, 1834. It is section 99 in Exhibit J; it would be section 5 in Exhibit E. The first and third paragraphs are as as follows: First paragraph:—

"This day a general council of twenty-four high priests assembled at the house of Joseph Smith, Jr., by revelation, and proceeded to organize the high council of the Church of Christ, which was to consist of twelve high priests, and one or three presidents, as the case might require. The high council was appointed by revelation for the purpose of settling important difficulties, which might arise in the church, which could not be settled by the church, or the bishop's council, to the satisfaction of the parties."

Paragraph three: "The number composing the council, who voted in the name and for the church in appointing the above named councilors, were forty-three, as follows: nine high priests, seventeen elders, four priests, and thirteen members."

On the same subject, section 49 of Exhibit E, page 179, paragraph 1, reads as follows: "Behold, I say unto you; that you shall let your time be devoted to the studying of the scriptures, and to preaching, and to confirming the church at Colesville; and to performing your labors on the land, such as is required, until after you shall go to the West, to hold the next conference; and then it shall be made known what you shall do. And all things shall be done by common consent in the church, by much prayer and faith: for all things you shall receive by faith. Amen."

And from the same Exhibit E, paragraph 1, section 51, being the revelation given to Oliver Cowdery, September, 1830, (that is the caption), it reads as follows: "Behold I say unto thee, Oliver, that it shall be given unto thee, that thou shalt be heard by the church, in all things whatsoever thou shalt teach them by the Comforter, concerning the revelations and commandments which I have given."

328 Regarding the name of the church about which I was inquired on cross-examination, will say that the church in the days of Jesus and the apostles as recorded in the New Testament, was called interchangeably "the Church of God," the "Church of Christ," "the Church of the Firstborn," "the Churches of the Saints." That is what I recollect about it. I refer to the passage in the sixteenth chapter of Romans. These names are used throughout the New Testament in various connections and in various places. The one in the sixteenth chapter of Romans is the only one that refers to that. Hebrews 12: 23 it is called "Church of the Firstborn." Acts 20: 28, "Church of God." 1 Corinthians 1: 2, "Church of God." 1 Corinthians 10: 32, "Church of God." 1 Corinthians 11: 22, "Church of God." 1 Corinthians 15: 9, "Church of God." Galatians 1: 13, "Church of God." 1 Timothy 3: 5, "Church of God." 1 Thessalonians 2: 1, "Church of God." Romans 16: 16, "Churches of Christ." 1 Corinthians 14: 33, "The Churches of the Saints." In the 33d and 34th verses it reads: "For God is not the author of confusion, but of peace, as in all the churches of the Saints."

On the same subject, fourteenth and fifteenth verses of the third chapter of Ephesians, it reads as follows: "For this cause I bow my knees unto the Father of our Lord Jesus Christ, of whom the whole family in heaven and earth is named." And on the same subject the ninth verse of the first chapter of Revelation, it reads as follows: "I John, who also am your brother, and companion in tribulation, and in the kingdom and patience of Jesus Christ, was in the isle that is called Patmos, for the word of God, and for the testimony of Jesus Christ." I understand that the words *kingdom* and *church* were used synonymously in the Bible and there are verses showing that they were so used. I read from the sixteenth chapter of Matthew, the eighteenth and twentieth verses: "And I say also unto thee, That thou art Peter, and upon this rock I will build my church; and the gates of hell shall not prevail against it. And I will give unto thee the keys of the kingdom of heaven: and whatsoever thou shalt bind on earth shall be bound in heaven; and whatsoever thou shalt loose on earth shall be loosed in heaven."

On the same subject from Exhibit E, paragraphs 1 and 2 of section 14, on pages 125 and 126, dated February, 1831: "O hearken, ye elders of my church, and give ear to the words which I shall speak unto you: for behold, verily, verily I say unto you, that you have received a commandment for a law unto my church, through him whom I have appointed unto you, to receive commandments and revelations from my hand. And this ye shall know assuredly, that

there is none other appointed unto you to receive commandments and revelations until he be taken, if he abide in me. But verily, verily I say unto you, that none else shall be appointed unto this gift except it be through him, for if it be taken from him he shall not have power, except to appoint another in his stead: and this shall be a law unto you, that ye receive not the teachings of any that shall come before you as revelations or commandments: and this I give unto you, that you may not be deceived; that ye may know they are not of me. For verily I say unto you, that he that is ordained of me shall come in at the gate and be ordained as I have told you before, to teach those revelations which you have received, and shall receive through him whom I have appointed."

329 About the method of representation in the Reorganized Church of Jesus Christ of Latter Day Saints, I was asked in my cross-examination. This book marked Exhibit 4, is a book entitled "A Manual of Practice and Rules of Order and Debate for Deliberative Assemblies in the Church of Jesus Christ of Latter Day Saints. Compiled by Joseph Smith and Thomas W. Smith. Revised by Order of Conference by M. H. Forscutt, E. L. Kelley, and Joseph Luff. Lamoni, Iowa: Printed and Published by the Board of Publication of the Church of Christ. 1891." This book contains the rules of practice in all deliberative assemblies of the Reorganized Church and under which provisions it conducts its business. This book, Exhibit 4, contains the rules of representation by delegates. It is chapter 16, page 158. On the question of representation by delegates of the churches, I read from paragraphs 25 and 26, page 82, Exhibit E, as follows: "It shall be the duty of the several churches composing the Church of Christ, to send one or more of their teachers to attend the several conferences, held by the elders of the church, with a list of the names of the several members uniting themselves with the church since the last conference, or send by the hand of some priest, so that a regular list of all the names of the whole church may be kept in a book, by one of the elders, whoever the other elders shall appoint from time to time:—and also, if any have been expelled from the church; so that their names may be blotted out from the general church record of names."

The rules of representation in the Reorganized Church, being chapter sixteen of Exhibit 4, are as follows:—

"*Sec. 175.—Ex Officio Members of the General Conference.*—The general officers of the Church, known as the Presidency, the Twelve, the High Council, the Seventy, and the Bishopric (proper), are *ex officio* members of the General Conference, and entitled to a voice and vote as representatives of the spiritual authorities of the church at large. All High Priests and Elders are *ex officio* members, entitled to voice and vote in General Conference, when present.

330 "*Sec. 176.—District Conference Delegates to General Conference.*—Organized districts are authorized to appoint at their last quarterly session of district conference, next preceding the session of General

Conference, delegates to said session of General Conference, who shall be entitled to represent said districts; which delegates so appointed shall be declared members of said General Conference, entitled to voice and vote.

"*1.—How Chosen; Notice of Choosing, etc.*—The choice and appointment by said districts shall be made by a majority of those present and voting in regular or called sessions of district conference, of the holding of which due notice shall have been given as to time and place within the district, together with a statement of any important business or action that is to be presented to, or likely to be had by said General Session, affecting said district, and to which their approval or disapproval is desired; that instructions to said delegates may be given as to their action.

"*2.—Qualifications to Eligibility.*—The only qualifications to eligibility to the office of delegate from district to General Conference shall be membership and good standing in the Church.

"*3.—Basis of District Representation.*—Each district shall be entitled to one delegate to every twenty-five members of said district, and one vote in Conference for each delegate to which they may be entitled.

"*4.—Rules and Restrictions of Delegate Voting.*—(*a*) The delegates present at Conference from any one district shall be entitled to cast the full vote of the district of which they are delegates, unless otherwise instructed by their district conference;—

"(*b*) *Provided*, that in a case of a disagreement of views among the members of said delegation, (the full delegation not being present,) they shall be entitled to cast only their individual votes as said delegates.

"*5.—Each Delegate Limited to Twenty Votes.*—No one delegate shall be entitled to cast, as representative in the same Conference, more than twenty votes.

"*Sec. 177.—Representation of Branches not in Districts.*—Each regularly organized branch of the Church not included in an organized district, shall be entitled to one delegate, who shall have the same privileges as delegates in districts.

"*Rule for Choosing of Branch Delegates.*—Due general notice to the members of branch of the time and place of meeting for choosing of said delegate shall be properly given, as in cases of districts.

"*Sec. 178.—Certificates of Appointment Required.*—Delegates shall be entitled to act as such as hereinbefore provided, upon presenting certificates of appointment, signed by the presidents or clerks of districts or branches appointing them.

"*Section 179.—Instructing Delegates; Number of Votes to be Cast by; Tie Votes, Etc.*—1. In all cases of grave importance, affecting the polity and faith of the Church, districts and branches may instruct delegates to cast a majority and minority vote, for and against;—

"2. But in no case shall the number of the votes cast by said delegates so instructed exceed the number to which the district appointing shall be entitled, as hereinbefore provided;—

"3. And in case of a tie in districts, or branches, on questions presented to them, certified to said delegates, the votes of said districts or branches, shall be cast in equal numbers by the delegates.

"*Section 180.—Organization and Membership of Delegate District Conferences.*—Districts may organize their sessions of conference agreeably to the above rules, by providing for delegate conferences, of which the basis of representation shall be one delegate for each six members in each branch, or faction thereof. Districts may constitute Priests, Teachers, and Deacons as members of their conferences, as well as the Elders, if they choose."

The use of quorums in the church is for the purpose of self-instruction, to facilitate and carry into effect the doctrine and laws and usages of the church. The body of people that were organized by Joseph Smith, Junior, as he was called, called themselves by the
333 varying names of "The Church of Christ," "The Church of God," and various other titles and names. It was organized in 1830, and from that time up to 1834 it was called by these various names. It was the same identical body of people; that is, according to history it was the same. We learn this from church organs and from personal contact with the membership. I mean the membership that composed or constituted the church called the Church of Latter Day Saints and the Church of Jesus Christ of Latter Day Saints. It was the same body of people that afterwards in 1834 called themselves the Church of Latter Day Saints. It was also the same body of people that afterwards in 1838 and up to 1844 maintained an organization and called themselves the Church of Jesus Christ of Latter Day Saints. They called themselves by that title, maintained an organization and had their headquarters at Nauvoo, Illinois. That was the same body of people who had maintained an organization here in Independence, Missouri, in 1831, '32, and '33, and the same body of people who were or had an organization at Far West, in Caldwell county, in the State of Missouri, after they were at Independence. And it is the same body of people who aferwards went from Far West, Missouri, to Nauvoo, Illinois, and I understand it to be the same body of people of which the Reorganized Church of Jesus Christ of Latter Day Saints is the successor. The reorganization is composed of members from that body, or was at the reorganization largely composed of members from the church as it existed prior to 1844.

RECROSS-EXAMINATION.

Yes, sir, I think you have stated the title or caption of the Manual, Exhibit number 4, correctly. That represents the Reorganized Church of Jesus Christ of Latter Day Saints. I know that such a work was prepared. I knew something about it as its preparation went on. I cannot say why they styled it the Church of Jesus Christ of Latter Day Saints. I think I can say why they called it the Church of Christ and said it was printed and published by the Board of Publication of the Church of Christ. It was because it

was in accordance with the usage of the Bible, the Book of Mormon, and the Book of Covenants, for the terms there used are synonymous with the Church of God. They are used synonymously or interchangeably with the Church of God, the Church of Christ, the Church of Jesus Christ, and the Church of Latter Day Saints. All of these terms are used in the book, and the term is an abbreviated form of the Church of Christ. Now that is the reason I think for the caption. The date at which this book was prepared, the documents composing it for its compilation, there was a former issue accepted by the church in this conference, but I cannot just tell when it was prepared; that is, the first issue of the book; but at any rate this board of revision was appointed and they submitted the matter they had compiled to the last conference that was held, the General Conference at Kirtland, Ohio. At that conference these elements were discussed and upon motion and vote they were adopted. That is, the manuscript from which this book was printed was submitted to the last conference held at Kirtland, Ohio, and was adopted by that conference just as it is published here, as we understand it.

334 I have not the minutes of the conference at Kirtland, at which that was done, not here with me. You will understand that the book, the original book, was published prior to that conference, and what was done there was simply to consider the amendment that appeared in the book. The conference minutes show this with reference to the subject: "The committee on revising the Book of Rules, as appointed by last Conference, reported as follows: Kirtland, Ohio,
335 April 11, 1891. Messrs. President and Brethren:—We, your committee on Revision of the Book of Rules, submit herewith as our report two books cut and pasted on slips ready for printer's hands, or to be made ready by us if accepted by you. To these, and on the margin of them, we have entered proposed corrections. These are chiefly changes in tense or case overlooked in first compilation, and a few transpositions. We have made no changes except grammatical ones, not feeling authorized to make others; but we suggest the following changes for your consideration." Then follows the changes suggested by the committee in detail and the report is signed as follows: "Respectfully submitted by your committee, Mark H. Forscutt, E. L. Kelley, Joseph Luff, Committee," with the following recommendation: "The committee recommend that the Rules of Representation be published in the Book of Rules in the amended form in which they are published in the *Herald*, with such other amendments as conference at this session shall provide. The committee, as such, has no further suggestions concerning the work assigned them. M. H. Forscutt, Chairman."

The minutes of the conference also show the following at that time: "After reading it was decided to take it up section by section. Sections 1, 2, 3, 4, 6, 7, 8, and 11 were adopted without amendment. Section 5 was divided into paragraphs. The first and second one were adopted without discussion. The third was opposed by Brn.

W. H. Kelley, Salyards, H. C. Smith, J. H. Wells, and F. M. Sheehy. It was supported by Brn. Pitt, Robinson, Forscutt, Hulmes, Hilliard, and Crabb. The measure was lost by a vote of 39 *against* and 17 *for*. Sections 9 and 10 were referred to the First
336 Presidency for report at this conference. Section 12 was recommitted. Section 13 was referred subject to report."

The title page that has been read here by me in answer to your question was the title page of the former work and is the same as before the work was amended, I think; at least it is essentially the same. The old Book of Rules of Order and Debate,—the preparation of it began, I think, as early as '76. After that, from time to time, there were some amendments added as they were indorsed by the church at this conference. The Book of Rules, Exhibit number 4, was not published prior to 1844. It was not a book of the church prior to that time; that is, a book authorized by the church prior to 1844. This book, Exhibit number 4, lays down rules of representation for the various branches of the church so far as delegate representation is concerned. It exhibits to us what we deem the best methods by which the voice of the people can be heard before the General Assemblies or Conferences.

337 Delegate representation in the church does not owe its existence to the rules that are found in this work. We find the principle in section 17 of the Book of Covenants, where it is declared that the churches shall send delegates, send priests or teachers, etc., to represent them. That contemplates the same principle. The passage quoted does not declare that it shall be the same system of representation as is laid down in this book, Exhibit 4. That is just a practical application of that principle. The church prior to 1844 had their rules for governing their assemblies. The principles embraced in these rules contained in Exhibit 4, we understand have been the practice of the church from the very first right down to 1844. The conferences of the church prior to 1844 were composed of members that were sent up from various parts of the United States and elsewhere; sent up by various congregations as well as those who chanced to live where the conference was being held. Yes sir, there is possibly more in these rules of representation than there was on
338 the same subject in any of the old books; that is, it may be fuller and probably is in its details, but it is simply the same principles formulated into specific rules so that the people may learn what they are and become familiarized with them, and therefore when they meet in assemblies and conferences the knowledge may tend to facilitate their work, and they may act more in harmony by reason of the fact that there is a rule to govern them in their deliberations as to the form and manner of procedure.

Chapter 17 of Exhibit number 4 is a chapter setting forth the Articles of Incorporation. I have not read it. The Articles of Incorporation were authorized by the conference. I have not read it to see, but I believe that chapter is the Articles of Incorporation. I

was in accordance with the usage of the Bible, the Book of Mormon, and the Book of Covenants, for the terms there used are synonymous with the Church of God. They are used synonymously or interchangeably with the Church of God, the Church of Christ, the Church of Jesus Christ, and the Church of Latter Day Saints. All of these terms are used in the book, and the term is an abbreviated form of the Church of Christ. Now that is the reason I think for the caption. The date at which this book was prepared, the documents composing it for its compilation, there was a former issue accepted by the church in this conference, but I cannot just tell when it was prepared; that is, the first issue of the book; but at any rate this board of revision was appointed and they submitted the matter they had compiled to the last conference that was held, the General Conference at Kirtland, Ohio. At that conference these elements were discussed and upon motion and vote they were adopted. That is, the manuscript from which this book was printed was submitted to the last conference held at Kirtland, Ohio, and was adopted by that conference just as it is published here, as we understand it.

334 I have not the minutes of the conference at Kirtland, at which that was done, not here with me. You will understand that the book, the original book, was published prior to that conference, and what was done there was simply to consider the amendment that appeared in the book. The conference minutes show this with reference to the subject: "The committee on revising the Book of Rules, as appointed by last Conference, reported as follows: Kirtland, Ohio,
335 April 11, 1891. Messrs. President and Brethren:—We, your committee on Revision of the Book of Rules, submit herewith as our report two books cut and pasted on slips ready for printer's hands, or to be made ready by us if accepted by you. To these, and on the margin of them, we have entered proposed corrections. These are chiefly changes in tense or case overlooked in first compilation, and a few transpositions. We have made no changes except grammatical ones, not feeling authorized to make others; but we suggest the following changes for your consideration." Then follows the changes suggested by the committee in detail and the report is signed as follows: "Respectfully submitted by your committee, Mark H. Forscutt, E. L. Kelley, Joseph Luff, Committee," with the following recommendation: "The committee recommend that the Rules of Representation be published in the Book of Rules in the amended form in which they are published in the *Herald*, with such other amendments as conference at this session shall provide. The committee, as such, has no further suggestions concerning the work assigned them. M. H. Forscutt, Chairman."

The minutes of the conference also show the following at that time: "After reading it was decided to take it up section by section. Sections 1, 2, 3, 4, 6, 7, 8, and 11 were adopted without amendment. Section 5 was divided into paragraphs. The first and second one were adopted without discussion. The third was opposed by Brn.

W. H. Kelley, Salyards, H. C. Smith, J. H. Wells, and F. M. Sheehy. It was supported by Brn. Pitt, Robinson, Forscutt, Hulmes, Hilliard, and Crabb. The measure was lost by a vote of 39 *against* and 17 *for*. Sections 9 and 10 were referred to the First
336 Presidency for report at this conference. Section 12 was recommitted. Section 13 was referred subject to report."

The title page that has been read here by me in answer to your question was the title page of the former work and is the same as before the work was amended, I think; at least it is essentially the same. The old Book of Rules of Order and Debate,—the preparation of it began, I think, as early as '76. After that, from time to time, there were some amendments added as they were indorsed by the church at this conference. The Book of Rules, Exhibit number 4, was not published prior to 1844. It was not a book of the church prior to that time; that is, a book authorized by the church prior to 1844. This book, Exhibit number 4, lays down rules of representation for the various branches of the church so far as delegate representation is concerned. It exhibits to us what we deem the best methods by which the voice of the people can be heard before the General Assemblies or Conferences.

337 Delegate representation in the church does not owe its existence to the rules that are found in this work. We find the principle in section 17 of the Book of Covenants, where it is declared that the churches shall send delegates, send priests or teachers, etc., to represent them. That contemplates the same principle. The passage quoted does not declare that it shall be the same system of representation as is laid down in this book, Exhibit 4. That is just a practical application of that principle. The church prior to 1844 had their rules for governing their assemblies. The principles embraced in these rules contained in Exhibit 4, we understand have been the practice of the church from the very first right down to 1844. The conferences of the church prior to 1844 were composed of members that were sent up from various parts of the United States and elsewhere; sent up by various congregations as well as those who chanced to live where the conference was being held. Yes sir, there is possibly more in these rules of representation than there was on
338 the same subject in any of the old books; that is, it may be fuller and probably is in its details, but it is simply the same principles formulated into specific rules so that the people may learn what they are and become familiarized with them, and therefore when they meet in assemblies and conferences the knowledge may tend to facilitate their work, and they may act more in harmony by reason of the fact that there is a rule to govern them in their deliberations as to the form and manner of procedure.

Chapter 17 of Exhibit number 4 is a chapter setting forth the Articles of Incorporation. I have not read it. The Articles of Incorporation were authorized by the conference. I have not read it to see, but I believe that chapter is the Articles of Incorporation. I

can tell by reading. Yes sir, it is. The church had been incorporated before 1891. These Articles of Incorporation have been indorsed time and again, and the conference authorized the insertion of the rules in the book,—indorsed by the entire conference upon due
339 notification. I cannot say whether the original church was ever incorporated. I don't know whether the two were precisely alike or not; could not say, but it is stated that they were incorporated according to the laws of the land; but as to the history, I don't know anything about it much. No sir, we claim there is nothing in the constitution or organization of the Reorganized Church in contravention of the laws of the land, neither was there before this incorporation was had,—nothing that I am aware of. I don't know what the laws of the States are to which you have called my attention,—Illinois and the Central and Eastern States,—and I don't know whether there is anything in the Constitution that is in contravention to the laws of these States or not.

I understand that the civil law provides for the organization of religious bodies and churches. Inasmuch as a church is to be subject to the laws of the land and to its civil rulers, there is a necessity that we should comply with the requirements of the laws of the land in regard to such things. Yes sir, I regard the Reorganized Church of which I am a member, an incorporation under the laws of the State of Iowa. The laws of the church found in Exhibit J, which I have already read, simply provide that the church shall subject itself to the laws of the land; and as the laws of Iowa provide that all religious orders or denominations may be incorporated, the church incorporated in obedience to that law as they are directed to do in the paragraph I read, and I take it the church is required to be in obedience to the laws of the land whatever part of the world it may be in. If the church incorporates under the laws of the State so far as relates to the matter of organization under incorporation, they adopt the laws. And by incorporating in the State of Iowa, we have not transformed the record of the church from the principles that prevailed before and adopted the principles laid down by the laws of the State of Iowa. No sir, no more than in the days of St. Paul, when he said, "Be subject to the powers that be;" no
341 more than when Jesus said, "Render unto Cæsar the things which are Cæsar's; and unto God the things that are God's."

There was another incorporation of the Reorganized Church besides the one in Iowa. I cannot tell you whether there was an incorporation prior to the death of Joseph Smith or not, but the Book of Doctrine and Covenants here in exhibit declares there was. It declares that there was an incorporation of the church before the death of Joseph Smith. I don't know whether it is falsehood or not. I am not prepared to say. In Exhibit J, paragraphs 1 and 2, section 44, we find, among other things: "The elders of my church . . . shall go forth . . . and preach repentance unto the people; and
344 many shall be converted, insomuch that ye shall obtain power to

organize yourselves according to the laws of man, that your enemies may not have power over you, that you may be preserved in all things, that you may be enabled to keep my laws." Now that is the interpretation I put upon that,--that they should in all things act in accordance with the laws of man, which is the law of the land, we take it. The church in incorporating under the laws of Iowa has simply accepted and acted in conformity with the requirements of the laws of that State, and it does not follow that by so doing, they have made the laws of Iowa the laws of the church.

I did not state in my examination in this case that the body of the church went from Far West to Nauvoo. It was not so stated by me, for such are not the facts. There were large bodies of people scattered around at different places that never came into Missouri, and the body that was here represented the chief officers of the church and the largest gathered body. There was about fifteen thousand said to have been in Central Missouri. They as a rule went to Nauvoo.

Read over, subscribed, and sworn to by witness.

---

346 HENRY A. STEBBINS, of lawful age, being produced, sworn, and examined, testified as follows in chief, on the part of the Complainants:—

My name is Henry A. Stebbins. I live at Lamoni, Iowa. Have
347 lived there ten (or eleven) years last November. I am Secretary and Recorder of the Church of Jesus Christ of Latter Day Saints, and also a minister in the church,—the present church in this case. I have been Secretary and Recorder in the Complainant church, in which my testimony is now being taken, since April, 1874. I was present at the conference of the church at Kirtland, in 1891, in April. I was the secretary of that conference.

I recognize page 56 of Exhibit number 5 as a part of the record of the conference of 1891 held at Kirtland, Ohio. It is entitled the Reincorporation of the Church and reads: "The subject of the reincorporation of the church was taken up and the following was moved and adopted,—That a committee of three be appointed to prepare articles of incorporation in harmony and in conformity with the present incorporation under the laws of the State of Illinois, the same to be used to further incorporate the society in the State of Iowa and other States by vote of any large branch or stake in such States as provided by the laws of the same." President Blair appointed as committee Brethren Joseph Smith, E. L. Kelley, and Robert Winning.

The number of different churches or branches of the church existing in the United States is about four hundred, besides about one hundred and fifty that are more or less in a disorganized condition, by reason of removals or departure of officers for other locations;
348 but about four hundred are now existing as organized bodies with officers, and holding regular sessions or meetings. Approximately

I know about the membership in the United States. It is from twenty-two to twenty-five thousand.

I know about the number of principal officers of the original church organization founded in 1830 who afterwards united with the reorganization. My knowledge is derived from personal acquaintance and with the records of the church. From knowledge I have received from various sources there were a great many who had belonged to the original church at Nauvoo that united with the reorganization. There was the president of the stake at Nauvoo, one of the Quorum of Twelve, at least twenty-one of the High Priests, eighteen of the Quorum of Seventy, at least from two hundred to three hundred and perhaps more of the elders, to say nothing of the lesser priesthood as they are called,—priests, teachers, and deacons. So far as my acquaintance or knowledge goes, of course I don't profess to have full knowledge, except from the records and the knowledge that has come to me in connection with my official relations with the church, from correspondence, etc., also by individual information, I think it would be safe to say that from three to five thousand persons who were formerly members of the original church, afterwards became members of the Reorganized Church, that is to to say, from three thousand to five thousand of the members who belonged to the original church united with the reorganization from 1853 down to the present time. I will say further that they are still uniting with the Reorganized Church. There may have been more than that but I do not wish to state with any greater degree of certainty than that. That is my judgment from my acquaintance with the records, and from correspondence I have had.

The record, Exhibit N, has been in my possession as Secretary and
349 Recorder of the church since I have held that office. On page 37, Exhibit N, in the motion reading as follows, "On motion Brother J. W. Briggs was appointed to coöperate with Brother Hedrick in writing out a pamphlet setting forth the true position of our doctrines," the word *Hedrick* in that resolution appears to be two writings there. The last one, the one in black ink; this in the darker ink is my handwriting. This same resolution occurs on another page of the same book, page 39, and as it occurs on page 39 it is in the same identical language that the resolution that I have just read is from page 37. The original name in that resolution on page 37 before the tracing was done by me was "Hedricks." It now stands "Hedrick." In the resolution on page 39 the name is spelled "Hedrix," as nearly as I can make it out.

The same name appears in another part of the record. On page 41 of the record of the proceedings of the succeeding General Conference it reads: "On motion it was resolved that Jason W. Briggs be, and is truly exonerated from acting in connection with Granville Hedricks of Bloomington in writing out matter for publication as directed by the fall conference previous." In the last resolution the word is spelled *Hedricks*.

The person in the Reorganized Church that has custody and control of the title papers to real estate, deeds, and other instruments of that character, is the Bishop of the church.

CROSS-EXAMINATION.

Page 37 is the first page of Exhibit N on which the name *Hedrick* occurs. Yes sir, I said I traced it there. I can't say the exact time. I don't know that I have an idea in relation to the time it was done. It was done after the records came into my hands.

350 That record, Exhibit N, came into my hands eighteen years ago this coming April; that would be in 1874. I don't know when it was written there, but I suppose at the time of the reorganization of the church in 1852 or 1853. The church was reorganized in 1853 and this is the conference minutes of 1857, and I suppose the record was written then. The record remained in the condition in which it was originally written from 1857 down to 1874, the time it first came into my possession, without being changed. I changed it, that is, if it can be called a change. I did not change it to any material extent.

I did not change it with the exception of striking out the letter *s*. The writing or ink in which it was written was dim and although it could be seen, I did not think it made any difference in striking out the letter *s*, for the reason that that was the way the word or name was spelled, and I did not think there would ever be any question on that point at all, so I struck it out; for it was evidently an error on the part of the secretary who compiled the record, in writing it that way. There was no object in writing over it at that time other than the correction of the error in the spelling and tracing the name over again in ink that could be readily seen.

The original writing can to some extent be seen there yet; for instance, the top part of the *k* and also portions of all the letters composing the name in the original writing. It was dim as I have stated and there being no question or prospect of any question being raised about it, I wrote it over again, understanding that the name was *Hedrick* instead of *Hedricks*. I think that was done not less than ten years ago.

I did not do that by order of the conference, nor by order of anybody,—did it upon my own motion. I have taken care of the records to the best of my ability, that and all the rest.

Do not know that I have made any other changes in the records aside from that. I cannot say I would know from recollection about that but I would know by examination if I had, but I do not know

351 from my memory. Yes, sir, I struck out the *s* in the name *Hedrick* and I did so that the name would agree with the resolution following exonerating Jason W. Briggs from acting with Granville Hedrick, where the name is *Hedricks*. I had no other reason that I know of to change any other word in that record of 1857.

Yes, sir, in my direct examination I refer to page 39 of Exhibit N. That is another record of the same thing. It was asked in my direct

examination if there was another copy of that record there. I said there was substantially another copy there and read it. Yes, sir, I stated there was a copy there. It is a fact that there is a line drawn through page 39 from top to bottom. I read there page 39 simply because I was asked to do so. I read also from page 41 as I was asked to do. It is the same record I understand the reference there to be to the same name. I do not know that it refers to the same name. I say just this in regard to it, that the record that follows exonerates J. W. Briggs from acting in that capacity to which he
352 was appointed at the previous conference. It does not make any reference to the previous resolution. The resolution speaks for itself.

I received the record, Exhibit N, from the hands of the family of the former Recorder of the Church; that is, the church did from that family, Mr. Isaac Sheen, who died just two days before the sitting of the conference in 1874 and it was in the hands of his family with the church records and before the close of that conference, I was appointed Church Recorder and not a great while afterwards, the records were delivered into my hands.

Mr. Sheen had a wife and two daughters and a son. I do not know how old his son was at the time but he was somewhere near manhood, about the beginning of manhood.

I think the records were not delivered directly into my hands, but were turned over to the church through a process of law and were received by the officers of the church. They were received, I think, by the officers of the law at first and by the officers of the law turned over to the officers of the church and by them delivered to me. I stated I received them directly from the hands of the family of Mr. Sheen, probably without a thought that there was a process of law in relation to the matter. It did not matter how, for I was the succeeding Recorder of the Church, and I suppose I meant without thinking of the fact to state that they passed into the hands,—directly into my hands as the successor of Mr. Sheen. I had no intention of misleading anyone, but I meant that I received them as the successor, and without any thought of the process of law that was had to get possession of the records.

I received them from the hands, as I remember it now, of Byron Shonts; that was the name of the party I received them from, and if it comes down to a question of my own personal sight, I do not know from
353 whom I received them, excepting this, that I saw them in the hands of the family the same day that they went out after them. I saw these two records; that is, this book and the Index to record A and there was the beginning of record B. I saw them in the hands of the family there the same day, probably two or three hours before they were taken by the constable and he took me and them in his buggy to Sandwich, Illinois, five miles from where the family was.

I think I know why they were taken by process of law. They

were taken for the reason that the church, like any other corporation or body, has a right to its own records, and, after the death of Isaac Sheen, the church through its officers, made request of the family for these records, and a refusal was made to the demand and request to give them up, and when the proper request had been made and had been met with a refusal to give them up, then the church by its Bishop at that time caused a paper to be gotten out, and a demand made for them by the proper officer of the law, and then they were delivered to the officer and so the church came in possession of them again. I am not prepared to answer the question as to what the family's reasons were for the course they took in refusing to surrender the records. I can't say that they gave any reason except that they did not want to give them up.

354 The line drawn through the top of page 39 of Exhibit N was made at the time the book came into my possession. I presume that that line was drawn through there because it was a repetition of what had gone on page 37. That was and is my presumption and belief, because the page is really and in fact a repetition of page 37 of the minutes of that same conference mentioned there. The claims or demands for that record by the proper officers of the incorporation were made on the 7th day of July, 1874. The Reorganized Church of Jesus Christ of Latter Day Saints was incorporated at that date.

I am Secretary and Recorder in the church as well as a minister. I am not the secretary and recorder of a corporation. My relation to the complainant,—I suppose the church is the Plaintiff or Complainant in this case, and as a member of the body and a minister of the body, Secretary and Recorder of the body,—I stand in that position to the Complainant; that is, the position of occupying those positions to the body, whatever they may include. The church to which I belong, is, as I understand it, a corporation for the purpose of carrying on its temporal affairs. For the purpose of carrying on its business, it is incorporated under the laws of the land. It was incorporated for the purpose of carrying on its business affairs, holding land, and giving it the right to sue and be sued, and whatever other rights, immunities, or obligations are conferred under the laws of the State where the incorporation occurs. In that sense it is a corporation and has a right to transact its business as a corporation.

355 I am a member of the branch at Lamoni, Iowa. I know something about the incorporation, that purporting to be the incorporation of the church at Lamoni in 1891. I know that such papers were drawn up and signed by quite a large number of people. My name was signed to this one, Exhibit A, being a printed copy of the Articles of Incorporation. In connection with others, my name is signed there. I don't understand I hold any position in that corporation. I am the Recorder and Secretary of the church. My duties are keeping a record of the names of the members in accordance with the laws of the church. I am also the Secretary. As Church Secretary, my du-

ties, or among my duties are, to issue letters of appointments, licenses, and attending to correspondence.

My ministerial office is that of high priest. I do not claim or pretend that I am a high priest of the incorporation or of that corporation that was effected in 1891. I do not know of any such thing, nor am I secretary and recorder of an incorporation. I do not know that I ever attended any meetings of that incorporation. I do not know whether it has a president and secretary or not, unless, as I under-
356 stand, the Bishop is the presiding officer over the financial and business affairs or matters of the church and has such charge.

Yes sir, I stated that there belonged to the Reorganized Church or had belonged to it since its first organization eighteen of the first quorum of Seventy. I ascertained that by having been personally acquainted with quite a number of them, and I have examined the record that is upon the church records and in the church papers and official church organs or papers,—the one known as *The Times and Seasons*, *The Evening and Morning Star*, and *The Messenger and Advocate*, and the names of the officers mentioned there as holding such and such places in the church, and having been personally acquainted with a portion of them. And also in the recording of names, I have recorded the identical names with the dates of ordination away back in the thirties from 1830 down. Now by these various methods of acquaintance and comparing records and keeping the records, I am aware that such is the case. I don't know whether I used the word *quorum* of Seventy or *quorums* of Seventy. There were quorums of Seventy prior to the death of Joseph Smith, but how many I cannot say. I have never made it a point to ascertain, therefore I cannot say how many. There was more than one, I am satisfied of that. I cannot say that there were as many as five, but I really think there were. There were two men in the Reorganized Church who were presidents of Seventies,—Josiah Butterfield and Zenas H. Gurley,—but how many quorums of Seventy there were, I cannot say.

Yes sir, I said that one of the original Twelve became a member
357 of the Reorganized Church. I said that from three to five thousand of the members of the original church had been members of the Reorganized Church at different times from 1853 down to the present time. I cannot state the number of members of the original church that are now living; for fifty years have passed away since the death of Joseph Smith, and the larger portion of them have died, the majority of them, and I cannot now give you any estimate of the number. I have in my possession other records than those I have presented here. It is a simple record kept prior to 1874, by Mr. Sheen. I have no record of the church older than that. I have no knowledge where there are any older than that.

As to the number of quorums of Seventy of which I am asked, there is now only one quorum of Seventy in the Reorganized Church and never has been but one. I think I know what the law is, as to how many the law of the church provides, it provides for seven quo-

358 rums of Seventy. The law provides that there *may* be such a number of quorums, but the law does not make it compulsory that there *shall* be such a number. There is nothing obligatory or compulsory about the law. The church may have them or it may not, it is at their option. I cannot tell how many quorums there were in the original church. There were possibly as many as five. The law does not necessarily provide for a specific number. It provides that there may be seven quorums of Seventy, but that number is not compulsory. The statement of the law is that the number of the Seventies may be increased to seven quorums,—simply gives the privilege of having that many quorums but does not state that there shall be that many. We understand that to be the rule, both from the Book of Doctrine and Covenants, and from the history of Jesus Christ and of his doings here upon earth with the church, that there would be quorums of Seventy, for he "called other seventies also," it says, "and sent them forth."

REDIRECT EXAMINATION.

When I said in my cross-examination that I did not know of any older record than Exhibit N, I supposed that he was asking me of, and talking about, the Reorganized Church, the records of the Reorganized Church is what I referred to. I thought the question referred to the plaintiff in this case and its books and records. It is to be supposed of course that the old church had its records.

RECROSS-EXAMINATION.

359 I have none of the original minutes, and as to what became of them I am not prepared to say, but they were published in the church papers as they were written, and what became of the original minutes I have no means of knowing. I can say it was simply an assumption of mine, or conclusion, that the records of the original church or minutes of the conferences of the oringinal church were published in the church papers or what purports to be the record of their proceedings. We find a record in the church papers, and it is stated that they are records of the proceedings, with the names of the parties who participated as officers. It is all printed there and signed with their names as officers of the meetings. What we find in the church papers of course purports to be copies of the minutes or records. That is what I mean and what I said.

Read over, subscribed and sworn to by witness.

ROBERT WESTON, of lawful age, being produced, sworn, and examined on the part of the Plaintiff, testified as follows in chief:—

My name is Robert Weston. I reside at Independence, Missouri. I cannot tell certainly how long, but I think sixty-two or sixty-three years. I was about twelve years old, I think, when I first came to Independence. I came to Independence in 1827 or '28. I have lived in this county ever since, but not in this town. We lived at Rock Creek about a year and then we came to town and I think it has

been sixty-one or sixty-two years since we came to town, but I was a boy at the time and don't remember the dates very well. It is
360 about two and a half or three miles to Rock Creek. I came from there here to school quite a while.

I knew a man in 1832 up to 1838 by the name of Edward Partridge. They called him Bishop Partridge. I don't remember the dates exactly, but I remember that I saw a crowd of fellows that were treating him pretty rough up in the courthouse square at one time. I remember that very well, but I don't remember the time, but I understood he was the Bishop of the Mormon Church,—we always called it the Mormon Church then. I suppose it is the same as the Latter Day Saints.

I knew Joseph Smith, the President of the original church. Do not think I should know him again if I were to see him even if he were living, and I understand he is dead. Yes sir, I knew Edward Partridge. He was called Bishop Partridge. Somewhere along in the 30's. I saw Joseph Smith one time, I cannot say when it was, but it was a time when he and Sidney Rigdon and some others were here.

I know this piece of property out here in Independence, Missouri, commonly called the Temple Property,—I know where it is located. I cannot tell you how long I have known it exactly, but it has been a long time, a great many years ago. I think it was in 1833 or somewhere along there that I became acquainted with it and from then on down to the present time, I have known it. Yes sir, I have known the Temple Lot very well since 1833 or along about that time, perhaps it was a little before or a little after that time that I first knew, but at any rate it was about that time and I have known it very well ever since that time.

The people generally in speaking of that property called it the Temple Property. I never heard it spoken of in any other way than the Temple Lot. That is what it is always called by everybody that I knew anything about. The people always called it the Temple Lot, that is what they said about it. People called it that for a long time and call it that yet although other people claim it now.

CROSS-EXAMINATION.

361 The people of whom I spoke in my direct examination awhile ago, I don't know whether they were called Mormons or called Latter Day Saints. I know outsiders like myself called them Mormons all together, but I don't know what their name was. I would not say that I had or had not heard the term *Latter Day Saints* at that time. I have heard that term used often but more particularly in recent years. During the time that Edward Partridge was here, we always called them Mormons, but I can't say positively what other names they might have called them and I don't know whether they called them Latter Day Saints at that time or not. I know I often heard that way of calling them, but I can't say just when it was. The outside

people always called them Mormons. The property in controversy in this case that I have called the Temple Lot was open ground then,
362 and I don't know who had possession of it for certain.

ISAAC N. ROGERS, of lawful age, being produced, sworn, and examined on the part of the Complainants, testified as follows in chief:—

I live in the city of Independence, Missouri, on Pleasant street. I have been living here since 1848. I have been in the mercantile business for a good part of the time and I have been in the banking business for the past twenty years. I am cashier of the Chrisman and Sawyer Banking Company.

I know the property here in Independence, Missouri, that is in litigation in this case. It is what is known as the Temple Lot. I know that property. I think I have known that piece of ground since 1853 or '54. I have known it since about that time as the Temple Lot. People generally called the lot in speaking of it, the Temple Lot. That is the name the people generally and usually bestowed on that lot in speaking of it since the time I first knew it in 1853. That is what I have always heard it called,—the Temple Lot.

NO CROSS-EXAMINATION.

---

363 WILLIAM MCCOY, of lawful age, being produced, sworn, and examined on the part of the Plaintiff, testified as follows in chief:—

William McCoy is my name. I live at Independence, Missouri. I have lived in Independence for fifty years and over. I am engaged in the banking business now. I have been at different times engaged in various businesses, but at the present time I am engaged in the banking business. I am the president of the McCoy Banking Company. I was not personally acquainted with Edward Partridge, but I knew of him.

I am acquainted with the property in controversy in this case known as the Temple Lot or Property. I know where it is located. I have been acquainted with it ever since my residence here and have known it all the time I have resided here. People generally called that property in speaking of it, the Temple Property. It was known by the name of the Temple Ground or Temple Property, or the Temple Lot or the Old Temple Lot, for it was variously called by these varying names by different people at different times, but it has always been distinguished as the Temple Property in some way or other, at least ever since I have been here, and that is fifty years and over. Fifty years ago it was known by the name of the Temple Lot or Temple Property; but it has changed around there a good deal since that time for at that time there were no houses out around there. At that time, it was just an open piece of ground and was for some time afterwards regarded as a very handsome piece of property or site and it was called the Temple Lot and has been ever

since so far as my knowledge goes. I can't tell you just how much of the time the property has been vacant. For some years it was just lying out there a vacant piece of ground. I couldn't tell you
3 how many years, but quite a number of years anyway. It was vacant without any improvements on it. Then Woodson and Maxwell had or made some claim to it, claimed to be in possession. There was a suit over it in some way and it continued through several years. Cannot say what time that was, but it was a good many years ago. I do not know that any improvements were put upon it, but there were lots sold in Woodson and Maxwell's addition and I presume that was a part of what was known as the Temple Ground. I can't say whether the present fence around the Temple Lot was the first fence that was ever put around it. I cannot answer that with positive certainty.

That piece that is now occupied,—that is the first fence that was put around it, I am pretty sure. I do not know that that is the first
364 fence as an absolute certainty. I think that is the first fence that was put around the piece of ground that is now in controversy in this case,—the Temple Lot Property so-called. I will say this, my recollection is not sufficiently distinct to say positively that it has never been fenced up before, but I do know that for many years previous to the time that it was fenced with the fence that is around it now it had been lying open and unfenced.

CROSS-EXAMINATION.

This piece of ground borders on the northwest on what is known as the old Westport road. There was a long period of time that
365 there was no fence there at all; in fact, I don't remember of its being fenced until this present fence was put there, but as I said before, it may have been fenced before this time. When I first came here there was a good deal of talk about this Temple Lot for it was a beautiful piece of ground and was beautifully located, the situation was healthful and the Temple Lot was much spoken of and I remember that finally there was a man hung upon it and that gave it a
366 great deal of notoriety. That was the only execution that had ever been had in the county and that event brought in about all the population of the county.

After that, of course it still remained there, still known as the Temple Ground. I never knew the exact locality where the temple was to be built, but rumor had it that there was a temple at some time to be built on it and it was a beautiful situation for anything of that kind. I do not know that Woodson and Maxwell's addition embraced or covered the precise location or site; that is, the special prominence in the site that is in the controversy here as I understand it. There was no fence around the lot in controversy in this case at the time the man was hung on the ground. I answered before and said that I did not know of there ever being a fence around this distinct piece of property until what is now around it was built.

THOMAS HAILEY, being produced, sworn, and examined on the part of the Plaintiff, testified as follows in chief:—

I live in Independence, have lived here ten years. The places I have lived in are within the corporate limits of the city of Independence. I came here ten years ago this spring. I know the piece of property called the Temple Lot that is in controversy in this case. I have known it ever since I have been here and I knew it ten years ago. It was not fenced until the summer of 1883. The trees were put on it in the fall of 1883, I think. I know the time it was fenced for the old gentleman that fenced it was living up at our house for four years and I was glad to see it fenced for it lay there as a loose lot and was used as a camping ground for circuses and for any other purpose that people who came along wanted to use it for. There were no improvements put on it before I came here. There were no improvements put on it before the fence was built,—none that I could see. If there had been any improvements, I should have seen them.

CROSS-EXAMINATION.

I have been a member of the church ever since 1846; that is, I was a member of the old church at first and I have been a member of the Reorganized Church about seventeen years. I could tell you just how long I have been a member of the church, if I had known you wanted to know.

---

367 DR. CLARENCE ST. CLAIR, of lawful age, being produced, sworn, and examined on the part of the Complainant, testified as follows in chief:—

I live here in the city of Independence, Missouri. I have lived here it will be ten years this spring. Ten years the 27th of March since I came here. I came in 1882. I know the property in controversy in this case, have known it ever since I came here. There were no improvements on the property when I came here first,—none at all. The first improvements that were put on that property was when they commenced in 1883 digging postholes and fencing it. I was down there several times when they were doing it. I mean when they were fencing it, the fence was put around it that fall. I was up on the lot about the middle of September. I went there to hunt the place where they supposed there was a stone sunk, but I could not find it. At that time the fence was built around it. I don't remember when the next improvements were made on the property. That little church was built there, but it was some time since, something like three years ago that was built, I should say. I don't just remember the date of it, however, but I know when I first came here there was no fence around it. There was a circus there and I went to the circus and that is how I remember so distinctly that there was no fence on it at that time. I think the trees were planted in the fall of the same year the fence was built. I think some trees were put out in September. It may have been later than that, but

it was the same fall that the fence was put around it. The fence was put around it in the spring, I think, and the trees were put out in the fall. I say in the fall of 1883. I don't remember so much about planting the trees as I do about putting the fence there and digging the postholes.

CROSS-EXAMINATION.

368 I came here in 1882. I never saw the ground in controversy in this case prior to that time. I know there was not a fence around it at the time I first came here,—that I know. I do not pretend to say that it had never been fenced before that time, but I do say that it had the appearance of never having been fenced at the time I first saw it. The fence was being built at the time I first saw it under the charge of Daniel Bauder. I know he cut the hay off it that season and the next season too for that matter. I guess he has had the hay off it every season since that time. That was the season of 1883 and '84 that he was cutting the hay on it that I know of. They put a fence around it in the spring of 1883 and of course the hay or grass grew on it that year.

The fence was around early enough in the season for that. No sir, there was not plenty of time to sow grass that season and have the hay from it. They didn't have to do that for at the time it was fenced, it was sodded. The grass grew from the sod. I suppose it was blue grass, most of it. Yes sir, there was some timothy there and blue grass and possibly some red top and probably some clover. I don't know what there was, but it is likely that these grasses were all there.

These were all grasses that grew voluntarily. The grass was the same as the balance of the grass that grows around the city. Yes sir, I find timothy sod around the city and clover too. Yes sir, where it is not fenced we find them mixed, all kinds of grasses, we call them tame grasses too. The seed gets scattered around, I don't know how, but it does in some way or other and we find it all around the city. I don't know whether the hay that was cut there grew from sod that had been sown on that lot or not, I don't know whether it had been sown or not. I couldn't certify to that.

EVIDENCE TAKEN BY AGREEMENT OF PARTIES IN SALT LAKE CITY, BEGINNING MARCH 14, 1892.

369 EMILY D. P. YOUNG, of lawful age, being produced, sworn, and examined on the part of the Plaintiff, testified as follows in chief:—

I am now living in the city of Salt Lake. I am a daughter of Edward Partridge, who was formerly a bishop in the original Church of Jesus Christ of Latter Day Saints. I think Edward Partridge died in 1841. I have it down on the record, and if I had access to the record, I could tell you exactly; but without the record I cannot.

I am one of the daughters of Edward Partridge, who, together

with my mother and perhaps two other sisters, signed a deed to certain property in the city of Independence, Missouri, and I believe it was for the Temple Property; if I haven't forgotten, it was for that. I have always had it in my mind that that was what the deed was for. I signed a deed for some property there, and I think it was the Temple Property. I never signed but one deed that I have any recollection of for land in Missouri.

There was only one brother and one sister who did not sign that particular deed. The sister who did not sign that particular deed is
370 now dead. I cannot say from positive knowledge, but I have always understood that the Temple Property was held by my father for the church. That was my understanding; but as I said, I have no positive knowledge.

I have always understood that the party who purchased the property and to whom the deed was given understood that it was church property, and so held by my father. I don't just remember what was said at the time. It was a long time ago, and I didn't charge my mind with it. I have forgotten a good deal about it, of course; but I remember knowing it, of course. I don't remember whether anything was said, or if anything was said, what it was about, the interest I had, or whether I had any interest or not.

At the time the deed was signed, my mother and two sisters were present. I can't be positive about anybody else; they were strangers, you know, and I can't remember their names. We went out into town and signed it, and I don't know who all were present. My brother Edward was not present at the time the deed was made. I was living at Winter Quarters then. Winter Quarters was where Omaha now is. It was called Florence then, or somewhere there. It was Winter Quarters where I was then anyhow. It was on the west side of the river and where either Omaha or Florence is now. I do not know whether the men the property was deeded to came to Winter Quarters or not, but the agent came there and transacted the business, or I mean the man that the business was done with came there; but I don't think the man who really bought it was there; his agent was there, and then after the deal for the property was made there in Winter Quarters, we went to a town in Missouri called Weston, I think, and executed the deed there.

371 Neither myself, nor any of my brothers and sisters, nor my mother while she was living ever made any claim to the property. We never did make any claim. As I say, I don't remember; I don't think we ever laid any claim to that property as being ours, for we never felt that way or thought that it could be ours. I never thought that the property was ours or thought that it belonged to us.

I don't remember the party with whom the deal was made saying anything about the kind of property it was. I understood at the time, and have always understood, and supposed he understood the character of the property thoroughly—understood perfectly the state of things.

I executed the deed with the understanding that the property was not our individual property, but was property held by my father for
3 the use and benefit of the church; and I executed the deed with the understanding at the time that the party to whom it was being conveyed understood the character and nature of the property that was being conveyed to him.

CROSS-EXAMINATION.

I don't remember anything about the party who purchased this property. I don't remember anything that was said; it has gone from my mind entirely; but I remember the party's being there—I mean the man that was there and did the business; but I don't remember saying anything to him that I recollect of. It has been a good while ago since these things happened, and I didn't charge my mind with them, for I didn't suppose it would ever come up again. I just signed the deed. I recollect that well enough, and I didn't
372 have anything more to do with it. I remember that I was called upon to sign this deed, and I remember doing that. I suppose the deed was read to me at the time, but I don't remember now anything about what kind of a deed it was, but I suppose it was a quitclaim deed or something of that kind. I don't remember what the date of the deed was. I don't think of anything now about the transaction, only that the deed was made and I signed it.

I have no positive knowledge that the deed was given for church property, but I always supposed it was. I know we always considered that the property was church property. We made no claim to it as being our property, for we supposed all the time it was church property.

The property was deeded away, I think, in 1848. I was born in 1824, and you can reckon up for yourself and find out how old I was. I was twenty-two I guess, or twenty-four; something like that.

I don't know how old I was when the property was purchased by my father. When I first went to Missouri I was about seven years old, and I guess the property was purchased about that time. I don't know anything about the purchase of it, for I was too young at the time to pay much attention to things like that.

REDIRECT EXAMINATION.

I remember very well when I first went to Missouri. I think it was in 1830, but I am not sure about that. I think it was possibly in '31 when we went there, and my father went the year before, in 1830 I think; but possibly it was not until '31. With reference to
373 where the Temple Property was situated while we lived there, we lived near it. I could not say exactly, but my recollection is we had a little house built right on the corner of it,—on one corner of the Temple Lot. I could not say for sure, but I have that idea, that that was where our little house was built, and it was right on the corner of the lot there,—the Temple Lot. My brother Edward, I remember, was born there; but I cannot say for sure that he was born on the lot we lived on at that time. This property was known as the Temple Lot

at the time we lived there, but whether it was called simply the Temple Lot or Temple Property, I would not be positive about that. My impression is now that it was called the Temple Lot; that is my best recollection.

RECROSS-EXAMINATION.

What I said about or know about what this property was called, is my recollection or impression; I don't know postitively what it was called. I was about seven years old when I went there, and when I came away I think it was in my tenth year. It was between those years, of course, that I was there. I was too young to remember about it distinctly.

Testimony read over, sworn to, and subscribed by witness.

---

374 JOHN H. CARTER, SENIOR, being produced, sworn, and examined on the part of the Plaintiff, testified as follows:—

I am living in Utah county, about three miles from Provo City, on what is called Provo Bench. That is in Utah Territory. I came here the third of October, 1850. Prior to that time, I lived at Kirtland, Ohio, almost two years; went from Kirtland to Far West, Missouri, in 1838; got there the third day of October, and on the 16th day of January I took my back tracks and went back to within five miles of the Mississippi River and staid there about a year, and then I went over into Hancock county, Illinois, staid there awhile, and just before the disruption in Nauvoo, I went up and lived in Nauvoo until the spring of '46. When I left Nauvoo, I went to Winter Quarters at a place called Carterville, in Iowa, and staid there about a year, and then I moved to Kanesville, Iowa, and staid there until July, 1850, and from there came through to Salt Lake Valley, here in Utah.

There were two of my brothers who lived at Carterville; Dominicus, and William Carter, both older than I.

375 I was a member of the original Church of Jesus Christ of Latter Day Saints. Was baptized on the 4th day of July, 1834, by an elder by the name of Daniel Bean, in the county of Oxford, in the State of Maine.

I held an elder's license in the original church, and held a high priest's license and belonged to the High Council. Was ordained an elder in Hancock county, Illinois, I believe in 1841, and was then put in the High Council, and was ordained a high priest. I was acquainted with the doctrines, teachings, and tenets of the original Church of Jesus Christ of Latter Day Saints in 1841, and was acquainted with them from the time I was baptized in 1834 up to 1841.

I was a member of the church at the time Joseph Smith was killed, and I was there when Brigham Young took the lead, and was in the meeting when he was nominated and voted in, and so on up to his death,—the death of Brigham Young.

I was acquainted with the doctrines, tenets, and principles of the church under Brigham Young from 1846 up to the time of his death,

for I lived here in Utah all the time since 1850, and most of the time in Provo, and have heard Brigham Young preach there often.

Some of the doctrines that Brigham Young taught were the same as the doctrine and teachings of the original church, and some of the doctrines that Brigham Young taught I never heard taught by Joseph Smith. Some of the doctrines taught by Brigham Young were the same, you know, as the doctrine taught by Joseph Smith in the original church; and there are some other doctrines or teachings taught by Brigham, or advanced by him, and taught and practiced, that I never heard taught by Joseph Smith, and I never knew him to practice them either.

Some of these doctrines that were taught by Brigham Young were never taught in the original church prior to 1844, and if any man had taught them he would have been disfellowshipped from the church very quick. That is, up to 1844 at the time that Joseph and Hyrum Smith were killed; the polygamy doctrine was never taught in the church in early days up to 1844. I lived most two years with Joseph Smith in one place, and I have heard him preach, and the rest of the elders,—Hyrum Smith, and Oliver Cowdery, and the rest of them; but I never heard the doctrine of polygamy taught by Joseph or any of them, never in the world.

376 I was present at a meeting in the city of Nauvoo, in the State of Illinois, at which something was said or done about the successor of Joseph Smith. It was held in the Bowery, right north of the Temple, and Joseph Smith was on the stand. I cannot tell you when it was, but it was not long before he was killed. This happened in Nauvoo, in the Bowery that was erected right north of the Temple, where they held meetings before the Temple was finished. Yes sir, Joseph Smith who was called Junior, was on the stand. It was on a Sunday. There was a congregation gathered there on that occasion; it was a large gathering. It was the people mostly from Nauvoo who had gathered there, and when they got together on these occasions there was a large gathering.

The occasion of the gathering was the Sunday service. The services that were held on Sunday; it was a Sunday preaching service, and Joseph Smith occupied the time in the forenoon. I don't recollect who did speak in the afternoon. Joseph Smith spoke from the platform in the forenoon. In the forenoon, I think, Sidney Rigdon was there, and I think Hyrum Smith was there, and William Smith. There was a good, large number of authorities there,—of the Twelve, and I guess Parley Pratt was there too. I don't think anything was said about the successorship there at that time, (afternoon); that is, using the word *successor*.

Joseph Smith came on the stand leading his son, young Jo-
377 seph, and they sat him down on a bench at the prophet's right hand, and Joseph got up and began to preach and talk to the people, and the question he said was asked by somebody, "If Joseph Smith should be killed or die, who would be his successor?" And he turned

around and said, pointing to his son, "There is the successor," and he went on and said "My work is pretty nearly done," and that is about all he said in regard to his son. He said in answer to a question that was asked as to who should be his successor in case he should be killed or die, and he pointed to his son, young Joseph, who was sitting there at his side, and said he; "There is your leader."

My father-in-law was with me at the time, and sat there and heard what was said, and when we were going home my father-in-law asked, "What does that mean?" He said, "That has got a meaning to it, from the way Joseph talked and pointed to his son," because Joseph had said "There is your leader," pointing at the time to his son, and my father-in-law said, "We will see the fulfillment of that by and by."

It was the understanding of the people generally, of the church as far as I know; all understood it from that day on that when the boy Joseph came of age he would take the lead in the church and be its head. There were a great many people who believed that, and moreover, President Young preached it himself for some time after he came into the Valley. That was the belief of hundreds and thousands; was the belief then, and is the belief now.

378 I have always believed that ever since I heard Joseph say the words I have stated, ever since I saw his father point him out; and I believe it to-day just as strongly as I ever did, and it was under that belief that I have followed President Young west with the branch of the church now known as the Salt Lake branch. That was the teaching and the ideas held out by the officers and elders, including Brigham Young and other prominent elders of the church, who afterwards came west and located here at Salt Lake City; and it was the teaching in Utah Territory for several years after the death of Joseph Smith. Here in Salt Lake City they publicly taught and held out the idea to the members of the church that Joseph Smith the son of Joseph Smith, Junior, would eventually be the President of the Church.

The idea was held out for some time after they came here; but after a while, when the boys did come here, they were rejected for some cause. I think I know pretty well why they were not received. When I refer to the boys, I mean young Joseph Smith and his two brothers.

Not one half of the members would have followed Brigham Young west, or would have followed his leadership, if it had not been published at the time and advised by the authorities of the church that young Joseph Smith would eventually be the leader of the church. If that had not been told the members, there would not have been one half to follow them who did in fact follow them. The doctrine, teachings, and tenets of the church from 1834, at the time I became a member of the original church, down to 1844, are found in the Book of Doctrine and Covenants. Take out the revelation on polygamy,

and you may take the balance. Polygamy was not taught from 1830 to 1844. I mean polygamy was not taught from 1830 down to 1834, and then down to 1844. I never heard Joseph Smith teach it, either publicly or privately; but about the time that Brigham Young took the lead in the church it was taught privately.

It was not taught publicly in any of the books, or in any of the publications or papers of the church, nor in the revelations that were received nor commandments that were given. It was not taught or countenanced in any way in any of the laws that were given the church, and the parties in the church who preached the truth were not authorized to teach anything else than what was found in the standard books of the church.

379 I was present myself, in 1837, when Joseph Smith himself, in the Temple, took the Bible, the Book of Mormon, and the Book of Doctrine and Covenants and laid one on top of the other, and said: "I motion that we take these three books for our guide and for our doctrine." Oliver Cowdery seconded the motion, and the people unanimously accepted the books.

The revelation known as "the revelation on polygamy," or the purported polygamous revelation, was never published in any of the books containing the doctrines and tenets of the church prior to 1844. If it was, I have no knowledge of it, and have never seen it; and I don't think it could be in any of them without my seeing it. I will say that it was not in any of the books prior to that time,—not one of them.

I had a copy of the Book of Doctrine and Covenants prior to 1844, and I hold about the oldest one there is in the country. I got it from Bishop Partridge in 1835, and I have had two more besides it since that time, and have had them all the time, as well as two Books of Mormon, and I have had them all the time too. I do not know about the Book of Doctrine and Covenants published in 1852; that is, the book printed in that year. I think the revelation on polygamy was presented to the church in 1852; that is, the revelation was made to the people and forced upon them. The Books of Doctrine and Covenants published prior to 1852 did not contain the revelation on polygamy; that was put in since 1852.

I think I know something of the manner of doing business in the church during the leadership of Joseph Smith from 1834 to 1844. I know what the manner of doing business was, and I know what the manner of doing business was under the leadership of Brigham Young. The manner of doing business under the leadership of Joseph Smith and that under the leadership of Brigham Young were not the same.

CROSS-EXAMINATION BY MR. HALL.

380 I said I was acquainted with the doctrines of the church, the original church, from 1834 to 1844; I stated that as a fact. There was a Book of Commandments, and the Book of Doctrine and Covenants. Yes, sir, I said that the doctrines of the church that was led by

Brigham Young and its principles are different from the doctrines and principles of the church from 1834 down to 1844; they differed.

Yes, sir, in lots of particulars. I can tell you one thing in particular: Joseph Smith never tried to take the agency from a man in regard to elections, in regard to office, or in connection with the proceedings and dealings of the church. At least I never saw it in Joseph's day, and I have been where they elected bishops and appointed and voted them in, and I have voted on them, and I never knew Joseph Smith to interfere in any way with the arrangements of the people in deliberating on these things. He always said he wanted it done by the voice of the people, and he wanted every man and every woman to vote. There was this difference between Joseph Smith and Brigham Young.

Brigham claimed the right to appoint all the officers in the church, and in the state; and Joseph Smith never did; that was one point of difference.

I was present when Brigham Young was chosen or nominated President. There was a vote taken on that occasion. I don't know whether the privilege was given for a negative vote or not, but I can tell you who appointed him or moved his appointment; it was Orson Hyde who made the motion that he be elected as President, and that was done at Kanesville, in the log schoolhouse. Orson Hyde made the motion and Brother Woodruff seconded the motion; it was put to a vote and declared carried. There were about two hundred there, I suppose.

It was at a conference appointed by Brigham Young and the Twelve to be held there, and it was two weeks from the time they had the big dance and the feast, and the people turned out, and cut the logs, and raised and built this log house; and then they appointed this conference, and Brigham, and the Twelve, and the people came together, and there was Brother Brigham, and Brother Kimball, and Brother Hyde, and I think there were several of the Twelve there at the time. Brother Woodruff was there also. Brother Brigham, when they got together, told them there was some business to be transacted at that conference, and he told them what it was, and then Orson Hyde moved that Brother Brigham should be our President, and Brother Woodruff seconded the motion, and it was carried.

I do not think it was the church that voted on him and elected him President, for the church at that time numbered something between two and three hundred thousand, and there were only about two hundred present at the time that Brigham was elected President; and it was just what I call a common meeting, hardly that. It was called a conference, appointed by Brigham and the Twelve that were there, and the church at large didn't know anything about it at the time.

382 Yes sir, I was present at Nauvoo and heard Joseph Smith make

certain remarks concerning his son, young Joseph. That was in the Bowery there, by the Temple. I have read the revelation in the Book of Doctrine and Covenants that was given on Fishing River a good many times. I have read the revelation on tithing lots of times, and I have paid lots of it too since I have been in Utah. I cannot say that the revelation on tithing is in the Book of Doctrine and Covenants I obtained in 1835. No sir, it is not in that book, because it was given in Far West in 1838.

Yes sir, I was present in 1837 when there were three books accepted at Kirtland, Ohio. I remember that distinctly. I saw Joseph Smith pile them up one on top of the other and say, "I motion that we take these three books, the Bible, the Book of Mormon, and the Book of Doctrine and Covenants to be our guide to go by." The motion was seconded, and it was carried. It was the first Book of Doctrine and Covenants that was published; I think the first book that was out. We only had one edition of the Book of Doctrine and Covenants at that time.

Yes sir, I said that polygamy was not taught in the time of Joseph Smith; that is exactly what I said. Yes sir, I said it was not publicly taught,—not by Joseph Smith nor Hyrum Smith, not while they lived; at least I never heard them teach it, and I know men that were cut off from the church for teaching it at that time. I lived in Nauvoo quite a while.

I lived there when it was broken up; was there at the death of Joseph Smith. I was there just preceding his death. I was one of the hundred guards that were there just before the time he gave himself up. He sent us home because he did not think we were wanted, and after we were home a little while, news came that he was killed. I was not there when he went to Carthage.

I was there when Brigham left there, and I left a little while after he did. I have stated repeatedly that polygamy was not publicly taught during Joseph Smith's lifetime. I think it was taught privately by some of the members, and practiced secretly by some. I knew of two or three there, and I could tell you who they were, and their names, if you want them.

The first time the issue was ever raised there was a member of the High Council by the name of Harris, and another by the name of Marks. They refused to accept it, and fought against it; they would not have it, and I don't think it was ever presented at another council or anywhere else until 1852, when it was presented here in Salt Lake City. The year that these men objected to the revelation in the High Council, I do not know the exact time; but it was soon after the death of Joseph Smith. I am sure it was after his death, because the High Council was in session fourteen days, and during that time this revelation was presented. There was nothing done with it because of the objections of these members of the council, and I know it was after the death of Joseph and Hyrum Smith.

I knew William Law very well, and I presume I was acquainted

with Austin Cowles also. I was not particularly acquainted with Leonard Soby; I have seen him. I was familiar with the authorities in the church there at Nauvoo. I knew Joseph Smith, Sidney Rigdon, Oliver Cowdery, Parley Pratt, and all of the Twelve; knew them at the time. Was acquainted with the President of the Stake and his counselors; that is, William Marks; I was well acquainted with him. He was the man that redeemed the Kirtland Temple. There was a mortgage on it; and afterwards, when he came to Nauvoo, he gave it back to the church.

I think the doctrine of polygamy was taught privately before the death of Joseph and Hyrum Smith, but I don't know that it was taught; I can't say that it was taught before their death, but immediately after their death it was privately taught. It was stated to the High Council. The first time it was ever presented to the High Council there were three of the High Council rejected it, but that was after Joseph and Hyrum were killed. Not a great while after, but it was after.

386 Yes sir, I said in my direct examination that there were some doctrines taught by Brigham Young after the death of Joseph Smith that were not taught before that time, and I say it now. The doctrine of polygamy was not taught by Joseph Smith, never in the world. I state that as a fact. If he did, I never heard him, and I never heard of it; and I don't believe he could have done so without my hearing of it. I was two years in Kirtland in the same place where he was, then I went to Missouri, and from Missouri back to Illinois, and was there up to the time of his death; and I never heard him teach any such a doctrine; but I heard him denounce it, for I know a man went into Wisconsin and taught it; and he wrote a letter to the president of that branch to cut that man off from the church. That was just before they were killed, just a little time before. That was in '43, I think.

The revelation was presented to the High Council after Joseph Smith was killed. I don't believe that he ever received it. I don't believe that he ever did.

I am a member of the Reorganized Church of Jesus Christ of Latter Day Saints. I was a member of the church here in Utah. I was baptized at first in 1834, in the State of Maine; and I was rebaptized,
387 in the Reorganized Church, about seven or eight years ago. I left the Church of Jesus Christ of Latter Day Saints here in Utah seven or eight years ago. I became dissatisfied with their doctrine and teachings, and left them and joined the Reorganized Church.

REDIRECT EXAMINATION.

As far as I have any knowledge of it, the doctrine of the Reorganized Church, as I call it, is the same as the doctrine and teachings of the original church. If there is any difference, I am not aware of it, for they teach the same doctrine out of the same books.

I have never heard of their teaching anything to the contrary if

they do. They teach the same as the original church so far as I can see; I know they use the same books, and teach the same doctrine I believe. It is the same as taught from 1830 down to 1844, and I know it is the same as taught from 1834 down to 1844, for that was the time I was in the original church.

At the time I was a member of the Brighamite Church here in Utah, Brigham publicly taught that Adam was God. I heard him teach it. I never heard that doctrine taught in the original church to my knowledge. While I was a member of the church of which Brigham Young claimed to be the President, Brigham and the members of the Twelve taught the doctrine of blood atonement. The doctrine of blood atonement was never taught in the original church prior to 1844.

388 Yes, sir, I spoke of the fact of Brigham Young here in the city of Salt Lake, in 1852, presenting to the people or congregation what purported to be a revelation,—what purported to be a copy of the original revelation that had been given to Joseph Smith. It was a revelation on polygamy, and Brigham said he had kept it locked up. He said he had locked it up at the time, and I think he said that Emma Smith, Joseph Smith's wife, had burned the original, and Bishop Whitney had burned the one he had. Brigham said he had kept that locked up.

That was the first time a paper purporting to be a revelation on polygamy was ever presented to the church; that is, I never knew it to be presented to the church or to any congregation up to 1852 from the time that Brigham left Nauvoo. At that time and at that place Brigham Young himself made a public declaration that no one present except himself knew of the existence of the revelation on polygamy that he presented. No one else knew of it. His exact remarks were that no one knew of it but himself. He also said that was the first time it was presented here in Salt Lake, in 1852.

RECROSS-EXAMINATION.

I understood that it was first presented to the High Council at Nauvoo, and three of the members; that is, three of the members of the High Council, rejected it; and then Brigham said he locked it up in his desk, and no one knew it. At a meeting of the conference Brother Hyde read it to the congregation. Yes, sir, the doctrine of blood atonement was adopted and taught by this church here in Utah.

389 If you doubt it, I could tell you of half a dozen instances where it was practiced or put in operation. I know that that doctrine was taught here in Salt Lake by the church, of my own knowledge, because I heard it taught myself from the stand. That is how I know it was taught. I have heard it preached to a congregation in Provo. That was not more than four or five years ago. It was the doctrine that if a man belonged to the church and apostatized, or fell away from the church, that the shedding of his blood should

atone for his sin. That was the doctrine, and I heard it taught from the stand right in Provo City. I have heard it taught in other places.

The time I heard it in Provo City was at a public meeting, and on Sunday. I was a member of the church then. I have never been cut off from the church since I joined it in 1834. They preferred a charge against me after I joined the Reorganized Church and sent me a notice to be at the meetinghouse at six o'clock and answer the charge of apostasy, and I told the messenger who brought the message to go back and tell the Bishop to put it off until the next morning at nine o'clock; I would be there then and answer the charge. That was the last I heard of it. I have seen the Bishop fifty times since then, I suppose, and he has not said anything about it.

Yes sir, I joined the church in 1834 and belonged to it until the breakup in '46; then I came through to the Valley with the part that came here under Brigham Young; and if you want to know what made me leave this church, if it is a church, and join the Reorganized Church, I can tell you all about it. There is nothing disgraceful in the way I left the church here and joined the reorganization, and I am not ashamed to tell anybody all about it.

390 Yes sir, I heard the doctrine of blood atonement taught in Provo not more than four or five years ago; that is exactly what I said, and it was in public. It was taught by those in authority in the church. It was taught by church authority. I can go back to the history of the church to the doctrine that was taught in Salt Lake by individuals and show you that they would not have taught it if it had not been sanctioned by the church. There was no official action taken on the question there at Provo, but when I see the Bishop or President of the Stake holding to it, and teaching it, and appointing men to preach it, they sanctioning what he says, I consider it as official then. There was no official action taken. There was no official action taken by the church at that time; but the church by its action showed that they countenanced it, for the Bishop would not appoint a man to preach and declare it from the stand if the church had not countenanced it. That is pretty near as official as anything was ever done in this church out here.

You must remember that the church out here does business in a different way from what it was done in Joseph's day, or is done today in the reorganization. Whatever was done in the Valley was done by the leaders of the church about as they wanted, without consulting the church to any great extent.

That is not an opinion of my own, it is a fact. We old timers here know too much about these things. We know them while we may not be able to come right out and prove them.

The understanding I got in the original church was, that the doctrine of the church was contained in the Bible, the Book of Mormon, and the Book of Doctrine and Covenants, and the leaders were instructed to preach nothing else when they preached but the gospel,—

only faith, repentance, and baptism for the remission of sins; and the Book of Covenants was the law of the church.

REDIRECT EXAMINATION.

391 I have not the Book of Doctrine and Covenants that contains the revelation on polygamy, but I have got it in a little history, word for word. I can't say exactly when the book was published in which that revelation first appeared, but I know it has not been a great while.

I am acquainted with the book known as the *Journal of Discourses*. I have it, and have read it all through and through, and there are some bad discourses in there too. The book is made up of discourses preached here in Salt Lake City mostly. I think J. M. Grant preached the roughest sermon on blood atonement that I have read.
3 392 That is in the *Journal of Discourses*. Yes sir, the doctrine of blood atonement was publicly taught here in Salt Lake City by Brigham Young himself. The sermon is recorded in the *Journal of Discourses*. I did not see the paper that purported to be the revelation on polygamy that was presented to the High Council at Nauvoo, and I don't know anything of its contents.

JOHN TAYLOR, of lawful age, being produced, sworn, and examined on the part of the Plaintiffs, testified as follows in chief:—

393 I live in Plain City district, eight miles from Ogden. Have lived there since I came from Montana in 1874. I was born in the year 1812; will be eighty years old the seventh of next December. I was a member of the original Church of Jesus Christ of Latter Day Saints. I became a member of that church in 1832. I joined the church in November, 1832, in Monroe county, Missouri. I was born in Warren county, Kentucky; Bowling Green is the county seat. I lived in Jackson county, Missouri; went there in 1833. I landed at Independence on Sunday, the tenth day of April, 1833. That was the day I landed on the Temple Block.

I knew Edward Partridge in Jackson county, Missouri. I knew him at Independence; there was a meeting held there on the Temple Block, and I saw him there at that meeting. It was a meeting of the branch, the Independence branch meeting. I joined the branch there. Edward Partridge was Bishop of the Church. Oliver Cowdery, John Whitmer, and W. W. Phelps were there at that meeting. Calvin and George Beebe, and John and David Whitmer were there.
3 I was acquainted with all of these gentlemen while I was there.

I know where Edward Partridge was living in 1833. He came to me after the meeting was over and took me home with him to his house. He had just put up a house there. That was on Sunday he took me home with him, and on Monday morning I commenced working for him; commenced quarrying rock on the Temple Block. He showed me where to get the stone to build a chimney to his house. There was no floor in the house at that time, but it was covered. He

said he would like me to build a chimney for him, and I went to work
390 and did it. His house was on the Temple Block. That is my recollection and impression about it. I would not be positive about it, but my best recollection is that it was on the Temple Block. I do not know who purchased the property originally that is in controversy in this suit. If it is part of the land that was called the Temple Block at the time that I was there in Independence, it is part of the land that was purchased by Bishop Partridge. I cannot answer that question by saying I know.

My understanding was that this property was church property. That was my understanding; but as to who entered the land or bought it, I cannot say. Edward Partridge took me to the corner stone, or the stone that marked the Temple, he and Mr. Morley together, and said that was the place where the Temple was to be built. That was the first time I ever saw that piece of ground, it was called the Temple Block, there in Jackson county, Missouri.

I know something about the members of the church contributing money for the payment of the purchase price of that land. I know that I contributed some money myself to it. That was contributed for the purpose of paying for this land. I paid the money I contributed into the hands of Bishop Partridge. I paid thirty dollars.
395 That was what I put into his hands. I cannot say that I know anything about other parties contributing to that sum. He had a large amount of money there, but who contributed it, I cannot say. I contributed thirty dollars, and who contributed the rest I don't know. It was my understanding that there was money put into his hands for the purchasing of lands, and I was to have a deed. He promised me a deed for my inheritance in the land.

I suppose the deed to the land must have been in his name, otherwise he would not have offered to make me a deed. It must have been in his name, for he told me he would make out a deed for mine; but in the meantime, before he could do it, the mob was raised, and they came there and tore things up, and we had to leave, and I never got my deed. I was to have a deed for the land that was to come to me from him, and all the other members of the church were to have deeds, that would settle on the land. They were to get these deeds from Bishop Partridge, but the land was all land of the church and didn't belong to him, although it must have been in his name. I don't know that the title was in his name for a fact, but it was my understanding that they were all to get deeds for their inheritance from him.

It was my understanding that this land was bought with the money of the church. There were some people who came there who did not consecrate their substance to the good of the church, but went ahead and bought land on their own account. They brought money there for the purpose of speculating and purchasing land, and they did purchase land because they knew of this revelation regarding the temple, and they knew that there would be a great

many people come in there, and the country would be settled up, and there would be a good town there, and land would raise a good deal in value; and they came there with their money for the purpose of speculating, and they bought land. There were a few who went for that purpose, but not many; and of course they had a right to do it if they thought proper.

According to my understanding the land was purchased with church moneys, because Edward Partridge told me he had contributed his money along with the other members of the church. The understanding was that the members of the church who came there and located were expected, under the rules of the church, to consecrate their property, or a part of it, for church purposes. The purpose for which this contribution of property was accepted from the members was to purchase lands. Edward Partridge showed me the chest the church funds were in; and I saw him take money out of it, and I saw him put money into it.

396

I was at Far West, in Caldwell county, at the time the church was there. I went from there to Illinois, and I next went to Nauvoo. It was about 1840 if I recollect right. I held the position of teacher in the original church from September, 1832, until Joseph Smith's death in 1844. I performed the duties of teacher from the time I went to Nauvoo until 1844. We had our bounds set off for us,—two teachers to each ward to look after the members in the ward, to see that no backbiting, or evil speaking, or iniquity was practiced, and see that all members of the church did their duties.

It was my mission to teach and instruct from the Book of Covenants, and the Book of Mormon, and the New Testament. We went together from house to house and visited every house. We taught them to attend to their prayers and see to it that there was no backbiting, or iniquity, or evil speaking; and if they had any hardness toward each other to inquire into it; and if there was any trouble like that, to go to work and get the parties together and have them settle it by arbitration.

397

It was our duty in case we found anybody with more wives than one to report them to the President of the Teachers' Quorum. There were twenty-four in the Teachers' Quorum. It was an organized quorum, and our instructions were if we found any case of that kind to report it to the President of the Teachers' Quorum, and the president would report them to Hyrum Smith. That was the instruction that Brother Hyrum Smith gave in the quorum. We were not to report these alone, but any other misdemeanor that we found in our wards, and they were all reported alike to the President of the Quorum.

Now I don't mean to say that there was any such thing as polygamy at that time taught or being practiced for that matter, but it was about that time that John C. Bennett's secret wife system came to be heard of, and it was talked around that there was such a thing as that; and that was the reason that the instructions were

given us, for were told to search it out and find what there was to it if we could. That was the way it was, and so I got after him, and followed him, and saw him go into a house that did not have a very good reputation. I followed him to the house there in Nauvoo where this secret wife business was practiced,—saw him go into it. He was said to be a doctor and was going about treating people. This man, Dr. John C. Bennett, was a doctor, and would go around treating people for one thing and another. He would go into these houses, and the women there were suspicious women,—did not bear good characters. I heard about his doing this, and I went around to watch him and see if I could not catch him going there. And one evening I traced him and saw him go right into the house. During the time that I was a teacher from 1832 up to 1844, there was no rule or law of the original church that permitted the practice or principle
398 of polygamy. There was no such a law, I am sure. At any rate, if there was, I didn't know anything about it, and never heard anything about it.

CROSS-EXAMINATION.

I said I knew where Edward Partridge lived in Independence, Missouri, and I quarried the rock for a chimney to his house. I think it was on the Temple Block. I would not be right positive that I quarried the stone on the Temple Block, but I think I did. I think also that the house in which the meetings were held was on it too. And they were, too, unless I am greatly mistaken; there were two houses there, and I am almost positive that both of them were on the Temple Block.

I know where the Lexington road was located there; at least I think I do, but I don't know as I can describe it. The Temple Block
399 was not far from the Lexington road. It was near the Lexington road, but I cannot tell you just how far it was. I do not know that I have an idea how far it was from the Lexington road that I quarried the rock. I think the road was north of where I quarried the rock. I think the road is north of the Temple Block or north of where it was. The Temple Block was not far from the Courthouse, but I cannot tell you the distance. I don't care to go into the question of how far it was, because I don't like to speculate on distance. I just state to you that I was on the ground, and that I was led to the cor-
400 ner stone and saw the corner stone. The corner stone was up above ground that marked the Temple, and I saw it myself with these eyes that I now have.

I know where the property is that is in litigation in this suit. I stood on the ground, and Bishop Partridge showed me where it was, and I quarried rock there on that ground too; that is, the ground that had been dedicated for the Temple, and that stone was there too
401 and marked the place as a landmark, and I understood it from both him and Morley. They both told me that together. Prior to the time I went to Jackson county I was not of age and lived with father in Monroe county, Missouri. I was in my twenty-second year when

I lived in Jackson county. My money was paid to Partridge after 1832, after the buying of the Temple Property.

Yes, sir, I stated that at one time I watched John C. Bennett go into a house that had a bad reputation, and I reported that fact when I caught him. That was in the year 1842; sometime in the latter part of the season. John C. Bennett and a lot of them built an ill-fame house near the Temple in Nauvoo, and there was a meeting ground in the grove near there. After they had built it, John C. Bennett and th. Fosters,—I knew all their names at the time, they were the head men of it,—after they got it built, they wrote on it in large letters what it was,—a sign declaring what it was, and what it was there for; but I don't remember just what the inscription or sign was they put on it. When we went to go to meeting we could not get there without passing this house and looking right at it, for it was close to the meeting ground, and one or two thousand people would go there to meeting on a Sabbath and they didn't feel very good seeing that house there with great big letters facing them when they would look at it.

404 The City Council held a council over it, and they considered it was a nuisance to the city, and the authorities passed an ordinance against it and notified them to move the nuisance; but they did not pay any attention to the order. They had some furniture in it, not much; the police gathered around, and one of the policemen went to go in to move some of the furniture or something that was in it, and John Eagle, a big, burly looking fellow, hit the policeman and knocked him down. They went in, and took the building, and put it on rollers; and there was a deep gully there, and they pitched the house into it—just rolled the house off and tipped it over into this gully, shingles and all, and that was the end of that transaction.

Yes sir, after I reported John C. Bennett there was action taken on his case. He was cut off from the church for that offense. Joseph Smith from the stand publicly called him "John C. Skunk Bennett;" that was the name he was given and known by. That was about the time he was cut off. That was in 1842, according to my best recollection, the latter part of 1842. At that time, it was called the John C. Bennett secret wife doctrine, and the first I heard of it
405 was not long before he was cut off from the church,—just a little while before he was cut off.

No sir, there was no polygamy. There was no talk of polygamy there at that time,—no talk of that kind at all that I ever heard. Joseph Smith and Hyrum Smith never taught polygamy, and there was no revelation on polygamy or celestial marriage, or anything of the kind. The church was governed entirely as a monogamy church from 1832, at the time I became connected with it, up to the time of Joseph Smith's death.

There was a man by the name of Brown that taught that doctrine. He was notified by the church authorities, tried, and cut off from the church. That was about the same time of the Bennett transaction.

There was another man by the name of Durfy who went to La Harpe, Illinois, and he told the people that he thought the time would come when they would practice polygamy, or the same doctrine with reference to plural wives that David and Solomon did. That was what Durfy taught. That was reported to Hyrum Smith, and Hyrum Smith sat on a well curb and wrote a notice to him that such a doctrine was not to be taught in the church. I saw that letter, and it was a severe rebuke.

406 I think I could identify the letter if I should see it; I think I could tell it. Yes sir, I recognize the language you read as the purport of the letter; but I didn't think at the time there was so much of it as there is there,—didn't think there was anything like as much of it as there is there. It has been a good while ago, almost fifty years, and that is a long time to remember these things you know. I recognize some of the language; it sounds something like it. I cannot recognize that as being the letter that was written at that time.

REDIRECT EXAMINATION.

407 The letter I referred to in my cross-examination is a letter that Hyrum Smith wrote and delivered to Mr. Hewitt, to take to those brethren out where this man was preaching this doctrine, or telling the people that the doctrine of plural marriage would sometime be taught in the church. I saw the letter at the time it was read to me. I saw the handwriting, but I did not read it myself. The letter was read to me. Mr. Hewitt read it to me, and I saw the writing, the same as if you had a letter opened there and I should see it. I saw the writing when Mr. Hewitt was reading it to me. The full name
408 of the man who read it was Richard Hewitt. I don't know whose handwriting the letter was in. Mr. Hewitt said it was Hyrum Smith's handwriting. He told me that Hyrum Smith wrote it and gave it to him.

I was acquainted with a man at Far West, Missouri, by the name of E. G. Gates. I knew him by that name. He lived in the city of Nauvoo. I knew him in Nauvoo, but I saw him in Far West, Missouri, before he went to Nauvoo. I knew Elias Higbee in Far West, Missouri. I knew him well when he lived in Jackson county, Missouri. I worked for him there—made eighteen hundred rails for him there. Elias Higbee was Judge of the County Court of Caldwell county, Missouri. Edward Partridge lived there at the same time. That was just before they moved in 1838, somewhere along there; I mean just before they moved from Far West. They moved from there in '38 or '39; and some in '39, that is, the spring of '39. I went in '39 myself, but a good many went out in '38. Edward Partridge went to Quincy, Illinois. He died in Quincy. He died not very long after we were driven out of Missouri—a short time after that. My father died about the same time, and Father Smith died about that time. My father died in the fall of '39. Partridge left Caldwell
409 county, Missouri, in the spring or summer of 1839. Think he was

among the last to leave. Some may have left later than that even; I don't know how that is very well. I went to Nauvoo in 1840.

DEPOSITIONS TAKEN AT INDEPENDENCE, MISSOURI, BEGINNING APRIL 18, 1892.

413 DR. CHARLES JOHNSON, of lawful age, being produced, sworn, and examined on the part of the Plaintiffs, testified as follows in chief:—

My name is Charles Johnson; I live in South West City, Missouri, McDonald county, have lived there nine years. Before I went to South West City, I lived in Richmond, Ray county, Missouri. I lived at Richmond from 1856 until 1874. Then went to Colorado for my health, and stayed there six years; came back to Richmond, stayed about fifteen months, then went to South West City, Missouri.

414 I knew the wife of Oliver Cowdery; became acquainted with her in Richmond, Ray county, Missouri, in 1856; she was my mother-in-law. I think that I was acquainted with her, for I took care of her for thirty-six years, her and her daughter, I married her daughter and the daughter of Oliver Cowdery. The daughter I married was Marie Louise Cowdery. I was married in 1856; I got acquainted with her in April, and we were married in September of that year, that same fall.

From the time I married her daughter, Mrs. Cowdery lived with me. She and her daughter were never separated a day in their lives, except that there were three days difference in their deaths. My mother-in-law died three days before my wife died. I took care of both of them myself. They lived in my family, and I took care of them from 1856, in September, the day I married my wife, until they were separated by death. Oliver Cowdery did not have any other children living at the time I married Marie Louise. I never saw any, nor
415 heard of any living except his daughter that I married.

Mrs. Oliver Cowdery died January 6, 1892, and Marie Louise Johnson, formerly Marie Louise Cowdery, January 9, 1892. Marie Louise Johnson was the daughter of Oliver Cowdery and formerly known as Marie Louise Cowdery. Oliver Cowdery is not living; I expect not, I think I said he was dead, but I do not know it, from the fact that I did not see him die. I understand that he died five years before I married his daughter. I understood he had been dead about that time when we were married. I know that from conversations I had with my wife and her mother, Mrs. Cowdery, and I suppose there was a hundred who told me of his death, who knew he was dead. I was not of the same religious faith as my wife and her mother. I did not belong to the same church, or the same religious faith. I would be a better man if I had been, for I was not as good as they were. I did not belong to any denomination at all. I did

not belong to any religious denomination, during any of the time from 1856, to the present time; never belonged to any.

CROSS-EXAMINATION.

I said that I had not belonged to the same church my wife had, or the same church her mother had; I did not belong to any church, and never did. I cannot tell you what church they belonged to, only from what they said. In the first place they belonged to what is called the Mormon Church; that is what I understood. I do not think when they died they belonged to any church at all, but their belief was with the Latter Day Saints. We did not talk very much about it betwixt ourselves, for I let my wife believe as she had a mind to, and she did the same with me. We got along all right; we did not live by quarrelling, or fighting; we lived peaceably.

I have met Mr. E. L. Kelley before. I never saw P. P. Kelley until last night. E. L. Kelley was at my house once; it was perhaps two years ago, I cannot tell the time exactly; I think about two years ago. My wife and mother-in-law were not related to him that I know anything about. E. L. Kelley was there at my house for the purpose of buying a quitclaim deed to the Temple Lot,—what is called the Temple Lot here in Independence. I never saw it, but it is called the Temple Lot here. Yes, sir, he bought it; we
416 gave him a quitclaim deed to it. He bought it from myself and wife, and got a quitclaim deed to it. The consideration for it was one hundred dollars.

There was some other consideration. I considered that my wife had an interest in a large amount of property in this section of the country, and he was to go on and settle it, and see how it came out, you know. I do not know how he was to settle it, I paid no attention to that, I supposed of course that it would go through court. The way I looked at it was, if the Temple Lot question was settled, it would settle the whole thing at once. We gave him a quitclaim
417 deed to two acres or thereabouts. I do not know how a quitclaim deed to two acres would settle our property interests in this country. I am no lawyer; I am a doctor, and know more about medicine than I do about law. I only spoke that way; I do not know that I meant anything in particular by what I said. It looked to me, as if the title to two acres were settled, it would settle virtually the title to all the rest. Mr. Kelley was just to go on and go through with it, but there was nothing said about that part of it; but what steps he
418 would take to recover this property would have a tendency in my favor, you know, that is all I know about it. In my own mind I included other land than the Temple Lot, a good deal more. I cannot tell you where that land lies, but some of it is here in Jackson county. A large body of it is not far from Kansas City. Yes, sir, my wife and I were apprised of the fact that we had a title to the property of which we were asked to make a quitclaim, a long time before we made the quitclaim deed. We received pay for quitclaim deeds,

but that was outside of this property. We received pay for quitclaim deeds for property in Jackson county, not very far from here. I am sure of that, for when I talk I mean business, and know what I say. None of the land for which we received pay for quitclaim deeds was in Ray county, although there was said to be considerable of it in Caldwell county. I think it was about thirty years ago when I discovered that my wife had rights in real property here in Independence, and in Jackson county. There has been a great many
419 lawyers tried to get me to let them take hold of it, and work it for me, but I always had enough to eat, and I did not bother about it. It was a long time before this suit came up that they were after me for it. When the question first came up there was nothing in the church about it. The church had nothing to do with it at first. I mean that it came up in the first place by lawyers in Kansas City. They were after me to let them do something with our property here, and I did not want to do anything about it, and would not have done anything with it, had they not urged it on me in the first place, and it took a great deal of urging to get me to do it. There was nothing about the church when I got hold of it at first, not a bit of the church in it at all. I do not care anything about whether it is worked or not, it does not affect me either way particularly. I have all the personal effects of my wife. Certainly I have; who would have them but me.

RE-EXAMINATION.

There is no agreement between myself and E. L. Kelley; nor was there any agreement between us at the time this deed was given, by which he agreed to settle the interest of myself and my wife of any
421 property in the State of Missouri. No such agreement in the world. What I mean by a consideration between E. L. Kelley, my wife, and myself, for the execution of this quitclaim deed was and is that Mr. Kelley would force a settlement as to this particular piece of property, this Temple Property. There was nothing outside of that at all, nothing but that. I said it was about two years ago that E. L. Kelley was down at my place; I do not recollect just how long it has been, but it was the time that the deed was executed by myself and my wife; the date on the deed will show the date he was there. I never saw him there but the one time, and that was the time the deed was executed. I have met Mr. Hall at my place, he did not offer me anything for this piece of property. I do not know what he was there for exactly; I did not know then what he wanted. I do not know yet what he was there for. He had some conversation with my wife and her mother, I cannot tell you whether it was about this particular piece of property or not. I was out a good deal of the time he was there, he would talk to them when I was out, and of course what he said to them was something I do not know anything about. I think Mr. Hall stayed with us all night. I do not think Mr. Hall made any claim to the property at that time. As near as I can come to tell the plain truth, I think he was there about that

ground and wanted it, but I do not understand your churches well enough to know the difference between them; I remember that I told my wife that, and she said she did not understand it exactly. He never made any offer for the property. I do not think Hall claimed when he was there that he was the head of the Latter Day Saints'
422 Church. Five or six years ago I had an abstract of the property and I had a lawyer look into it.

RECROSS-EXAMINATION.

When I have spoken of this particular piece of property during my testimony, I have referred to the Temple Lot, or what is called the Temple Lot here in Independence, I mean the two acres or thereabouts which my wife and myself quitclaimed.

E. C. BRIGGS, of lawful age, being produced, sworn, and examined on the part of the Plaintiff, testified as follows in chief:—

I am fifty-seven (57) years old; I live at Shenandoah, Iowa. I first became acquainted with the doctrine of the Church of Jesus Christ of Latter Day Saints in 1842. I was living then in Wisconsin, at Beloit. I was acquainted with the steps that were taken, and with the principal men that were engaged in the movement that finally led up to the reorganization of the church. I was acquainted with them, and am to-day. This reorganization commenced in 1851, at Be-
423 loit, Wisconsin. Jason W. Briggs was the first and principal mover in the work with David Powell and John Harrington. Jason W. Briggs prior to that time belonged to what was known as the Latter Day Saints, to the organization and church that was established in 1830, or more particularly the church which he belonged to was the Church of Jesus Christ of Latter Day Saints, organized April 6, 1830. That church was disorganized in 1844.

Jason W. Briggs held the office of an elder in that church prior to 1844. David Powell belonged to the same church with Jason W. Briggs, but I think Harrington joined the church there in Beloit. I am quite sure he did. Some others of the chief movers, who participated in the reorganization in 1851 or 1852, belonged to the original church in 1830, and were members of it before its disorganization. John Williams was there at Beloit, and my mother, Polly Briggs, and my sister, Mary Stiles. The whole branch, in fact, that was there at Beloit. I do not know how many members of the church there were there at that time, but all who were members there and belonged to that branch went into the reorganization.

I know that Zenas H. Gurley took part in the movement in 1851, or 1852, also William Marks took part in it. There was a branch of the original church established at Beloit, during the lifetime of Joseph Smith, and my brother Jason W. Briggs was the presiding
424 elder of that branch. From the time of the death of Joseph Smith in 1844, up to the time of the commencement of the reorganization in 1851, that branch retained its organization. There was a branch of

the church there, but I was not a member of it, and could not enter into the details of it. I simply know there was a branch of the church there. As to the steps that were taken looking towards a reorganization of the church, the first subject or matter that introduced the reorganization, was a purported revelation given in 1851; and the idea affirmed in the revelation was that in due time the Lord would call upon the legal successor of Joseph Smith to assume the Presidency of the church, and commanding the Saints there to establish their altars; that was about the idea.

There was a conference held in 1852, at Beloit, Jason W. Briggs, and Silas Briggs, I had forgotten to mention him before, he was associated with them too, he was my oldest brother, and also associated at that conference were Zenas H. Gurley, David Powell, and Mr. Harrington, and William Hartshorn. There was quite a large gathering, but I do not recollect their names. There has been conferences held from that time to the present, regularly ever since. I attended a great many of them, but that was the first conference I ever attended, that in 1852. Since that time I may say I have generally attended them, when I have been so I could I have been there. Some of the time I have been on a mission, and one time nearly three years, and during that period I did not attend any.

The laws that formed the basis of the organization in 1852, was
425 the Bible, the Book of Mormon, and the Book of Covenants, which was adopted as a rule of action of the church established in the year 1830, in the original church, and it claimed to be a reorganization of the church which had been disorganized. The basis adopted by the church at that time has never been changed since it was organized there at that time, and has been so recognized since, that anybody who had ever united with the church (I mean the original church), and had not been expelled or disfellowshipped from the church, still belonged to the church, and that was the only test that was required when they joined the reorganization.

At the present time I hold in the Reorganized Church of Jesus Christ of Latter Day Saints the office of a traveling presiding elder. I have held that position since 1860. I belong to the quorum known as the Twelve Apostles. I have been a minister in the Reorganized Church since 1852. I took my first active mission in 1856. Since that time I have been an active minister, most of the time. I have labored in about thirty-five States and Territories. I have labored in the United States, Canada, and Nova Scotia; have been in the work from one side of the continent to the other.

I was acquainted with a party by the name of H. H. Deam, at Beloit, in 1852. He was not at the first conference; he wrote a letter there, but he was not at the conference personally. He was identified with the movement; he was a high priest in the original
426 church, established in 1830. I do not think that I remember that William Marks was identified with the reorganization until about 1857; he became identified with it I think about that time. He was

a high priest in the original church, and President of the High Council in Nauvoo, and of the Stake there at Nauvoo.

I was present at the conference of the Reorganized Church held in 1860, at Amboy, Illinois. The most noted step that was taken at that conference looking towards further reorganization of the church was the ordination of Joseph Smith to the Presidency of the High Priesthood; also a Bishop of the church was called that spring, Bishop I. L. Rogers, also the seven presidents of the Seventies were chosen, and I was chosen at that time President of the Seventies. I am not certain, but I think the standing High Council was chosen. I was and am acquainted with the doctrine, teachings, and tenets of the original Church of
427 Jesus Christ of Latter Day Saints, organized in 1830, and I am acquainted with the doctrine, teachings, and tenets of the Reorganized Church of Jesus Christ of Latter Day Saints. The doctrine, teachings, and tenets of the original church established in 1830, and that of the Reorganized Church of Jesus Christ of Latter Day Saints are identically the same in every tenet and principle; there is not any difference. At the conference in 1860 there was a counselor appointed to the Presidency of the Church, a first counselor. That was William Marks, the same William Marks who, prior to the death of Joseph Smith, had been President of the High Council at Nauvoo, and President of the Stake at Nauvoo. Zenas H. Gurley was the presiding officer of the conference held at Amboy, Illinois, in 1860. He was one of the Twelve Apostles.

CROSS-EXAMINATION.

I was born in February, 1835, and am fifty-seven (57) years old. I know what occurred with reference to the doings of the Latter Day Saints, by the record of the church and the teachings. That which was taught by the church and which is recorded in their standard works. I have seen the records of the church so far as they have been published. I have seen and read the history of Joseph Smith, published during his lifetime. I have seen the records of the church in those days, in so far as they have been published. I have seen the records of the church from 1835 to 1844, in so far as his diary is published. I mean Joseph Smith's diary. Yes, sir,
428 Joseph Smith, the founder and prophet of the church in its early days, during the existence of the original church, before its disruption. We call him the prophet, seer, and revelator. I saw his diary as it was published. I suppose it was a correct copy of his diary, for during a part of the time of its publication he was editor of the paper in which it was published. I should think that would show that it was a correct copy; at least we think it is correct; we do not know anything to the contrary. I saw a publication, which purported to be his diary, of which he was the editor. It is more than probable that the publication was correct. What was said to be published by him was his personal diary, and then the other matters

that were published purporting to be records of the church, such as the minutes of the conferences, etc.

I was in my tenth year when he was killed; he was killed in June, I was born in February. At that time I had never seen him personally. I did not mean in the sense of receiving what I stated in a personal communication from him, but I meant from his writings and teachings. He published a paper, the *Times and Seasons;* that is, during a part of the time he was the editor of that publication and exercised a general supervision over it. We took that paper, from the time when I first heard of his doctrine until the time of his death, but I was only a child then, you know; but notwithstanding that fact I took a great deal of interest in things. I first heard of his doctrine in 1842. I was in my eighth year at that time. I read the paper partially, not very much; I heard it read more than I read it myself. From what I heard read and read myself, I remember the doctrine of the church to some extent. It was from what I read and heard read, in 1842, and 1843, I remember it now. We were taking his paper the same as you take papers now in your family. He was publishing the *Times*
429 *and Seasons.* He was not the only editor of that publication; he was the editor or one of the editors, and it purported to be from him, and the assumption is that it was. In every paper there was what purported to be the history of Joseph Smith, and I was very much interested in it. I did not read it myself, but somebody else did, and I was very sure to hear every particle of it when it was read, because I was interested in it. I wanted to hear it all, and I did hear all that was published during that time. I obtained my knowledge of the principles taught in the church at that time, principally from the *Times and Seasons.*

No, sir, the *Times and Seasons* was not an inspired paper, or publication, I do not so understand it; but there were things in it that were undoubtedly inspired, but not the whole of its contents. There was interspersed in it revelations from Joseph Smith, or that were made through him, that we claim were inspired. There is no claim
430 made on behalf of that paper, in the sense that the claim is made on behalf of the Bible of its inspirations. Yes, sir, there were revelations published in that paper, and the history of the time in which they were given, and the circumstances surrounding them. They were published in other publications of the church at different places. The *Times and Seasons* was called a religious paper, and gave the history of the occurrences that took place in the church. The revelations and resolutions of the conferences, so far as conference resolutions were authority governing the church. Well, the conferences were from 1830, up to 1844, as much as we had of it in the history published in the papers.

The revelation of 1841, given, I think, the 19th day of January,
431 was, I think, published in the *Times and Seasons,* and a great many others. No, sir, I did not say it was published in 1841. I said it was given in 1841, and it was published in the *Times and Seasons,* but

I cannot give the date of its publication. The revelation of 1832 was published in the *Times and Seasons*. The revelation of 1841 is that referring to the building of the Temple at Nauvoo, Illinois.
432 Yes, sir, I can give you a quotation from it. This language occurs in it: "Let my servant Joseph and his house have place therein, from generation to generation; for this anointing have I put upon his head, that his blessing shall also be put upon the head of his posterity after him; and as I said unto Abraham, concerning the kindred of the earth, even so I say unto my servant Joseph, In thee, and in thy seed, shall the kindred of the earth be blessed. Therefore, let my servant Joseph, and his seed after him, have place in that house, from generation to generation, forever and ever, saith the Lord."

I do not remember now any particular one that was published in the *Times and Seasons*, all the Book of Covenants, more or less, was published in that, either in a general way from time to time, or in that history of Joseph Smith, or the history of the church, and also in the *Millennial Star*. It is all in there more or less, and up to the time of his death there was his general history published in the *Times and Seasons* and *Millennial Star*, and there are some other papers published that it is in, too.

There was one revelation in 1838, that was on tithing; I think that was the time the revelation was given. There were some letters by
433 Mr. Smith, which were published in 1842, in the *Times and Seasons*, I think. Some of them were in relation to baptism, the manner in which it should be conducted. These letters were never received as authority in the church so far as I know. I do not know that they have been regarded like the revelations in the Book of Doctrine and Covenants. They were letters written to men in the city of Nauvoo, at the time, and published. He was not in the city of Nauvoo at the time.

I cannot give you the date of the "Fishing River revelation." Fishing River, as I understand it, is in Missouri. I think I know the substance of the Fishing River revelation; it was given through Joseph Smith, I suppose; most of them were given through him, some of them were given in connection with other parties. These
434 revelations given in 1830 to 1841 and 1842, were published in the Book of Doctrine and Covenants, and some of them in the Book of Commandments. I mean revelations given before 1840 and 1842, were so published. The particular revelations given in 1838, 1841, 1842, and 1843, I do not know when they were published, I suppose when the next edition of the Book of Doctrine and Covenants came out. The last Nauvoo edition that I remember of seeing published was in 1845, and they were in that.

I think I know what is meant by the rejection of the church, it means the disorganization and rejection of the church. It had reference to the church as an organization, and the effect of the disorganization was to disorganize it as a body or as an organization.

That incident referred to the fact that if under certain conditions they did not do a certain work, they should be rejected as a church with their dead. I do not know what date they were rejected; the understanding that we have always had, or at least I have, is that it signified that at the time the church was disorganized, then it was rejected. I think it was disorganized June 27, 1844.

These letters that I referred to, written by Joseph Smith in 1842, or 1843, were not considered authority in the church. I know they were never received as authority according to the best information I have had. They were not received to the best of my knowledge and belief, and I do not think they could be without my knowing it. No doubt they were wise instructions; we so hold them to be. They expounded the truth upon the question of baptism, and that doctrine, we hold to be a truth. We hold them to be wise instruction, but we have not as yet received them. Those letters were placed in the Book of Doctrine and Covenants, but not as revelation. They were placed there in 1845, if that is the edition in which they are first found.

335 Prior to 1845, the Book of Doctrine and Covenants had been adopted by the church. It was received by the church in 1835; that was the time that most of the revelations were published; only three or four were received after that time. These letters were first published in the 1845 edition; that is my memory. That book published in 1845 was never adopted by the church; it could not have been, for the reason that the church, as a church, had been rejected at that time, and the church as an organization had been rejected at that time. I do not think anyone posted in our religion would present that book published in 1845 as an authority in the church, and so I say the book has never been presented here in that way. Of course there is a great deal that is contained in our Book of Doctrine and Covenants that is contained in that also. The letters of Joseph Smith were never presented to the church as an authority, and were never recognized by it as authority. The Book of Doctrine and Covenants, the 1845 edition, was never adopted by the church as authority; nor was it by the old church, for the old church was rejected at the time of its publication. It was published under the auspices of the Twelve, in 1845, and at that time the church had been rejected. It was published under the auspices of the Twelve that had formerly been in the old organization before it was rejected.

I suppose that they claimed that they were the old organization. They made that claim then, and I guess make it yet. I regard as having been adopted by the Reorganized Church, revelations that 437 were adopted by the church prior to the death of Joseph Smith in 1844, or rather those that were published by the church prior to that time. I do not remember that there was any edition of the Book of Doctrine and Covenants published from 1835 to 1845. I do not say there was not, but if there was I do not know of any, and there were only two or three revelations after 1835. There was one in 1838,

perhaps one in 1837, one in 1841. The one in 1837 has reference to Thomas B. Marsh, I think; it was published in the *Times and Seasons*, and in the *Millennial Star*. I took the revelation of 1837, to
438 Thomas B. Marsh, to refer to the Quorum of Twelve, the same quorum some of whom went to Salt Lake. It was not the quorum that went, nor a majority of the quorum as a quorum that went to Salt Lake. No, sir, it was not a majority of the quorum; for it was disorganized as a quorum at the time. That is not simply my view, nor is it the view that was held at the time, for they claimed it, too, that it was disorganized, for at the reorganization up at Kanesville, they took three out of their quorum. No, sir, nine of them did not leave there and go to Salt Lake City. I assert that positively; I mean from their standpoint. I know the record of it, I know it from the published statements and the history of it as it occurred.

Yes, sir, I have stated that the doctrine of the Reorganized Church and of the original church were the same. Yes, sir, the Reorganized Church afterwards adopted the Book of Doctrine and Covenants; that is, adopted it after the reorganization, as you term it. It adopted the Book of Doctrine and Covenants for what it purported to be, and the standard books of the Church, the Bible, the Book of Mormon, and the Book of Doctrine and Covenants were adopted at the conference of the Reorganized Church in 1852. They adopted what purported to be the Book of Doctrine and Covenants as recognized in the history of Joseph Smith, as written during his lifetime. They did not adopt everything contained in that Book of Doctrine and Covenants, published in 1845; they paid no attention to it. They adopted it in so far as it purported to contain the revelations of Jo-
439 seph Smith as contained in the edition of 1835, and the revelations that Joseph Smith by his published writings recognized to be his revelations. They did not adopt it in its entirety, or any portion of it; but they adopted the book of 1835. What I mean to say is that there was very little difference between the editions of 1835 and 1845, as there had been only three or four revelations given between these dates, and those given after 1835, were in the 1845 edition, but as it was published after the death of Joseph Smith, of course the Reorganized Church did not recognize it. The Reorganized Church, I might say, just takes that 1845 edition for what it is worth, without any reception or rejection about it, as they do his letters, and not as an authority in the church. To constitute a revelation as an authority in the church, it must be passed by the general rule in the church; that is, first passed by all the quorums, then by the church as a body.

The Reorganized Church did not publish a Book of Doctrine and Covenants in 1852, I cannot tell you the exact date, but it was some
440 time after 1860. I could not tell you how many editions of the Book of Doctrine and Covenants have been published since 1860. I think there has been two, perhaps; there has been more than one, I know. There was no revelation given in 1851, that is recognized in the

book, nor in 1852, that is recognized or incorporated in the book.

At the reorganization in 1852, there was some question about who should preside; the revelation given to Deam, in 1852 or 1851, made some reference to that question, and it was a matter of discussion whether there was any person present at that time, to whom it referred. Some thought it meant the highest in authority, and others
441 thought something else. The question was settled there, settled in favor of Jason W. Briggs, who held the office of high priest. Yes, sir, high priests are always elders, but elders are not always high priests. Yes, sir, Jason W. Briggs was an elder in the old church. I know he was an elder because he came into the neighborhood where I lived, and baptized and ministered and preached, and had a license as a minister. I should say he had a license as an elder; I have seen his license. Yes, sir, William O. Clark, I think, ordained him; that, of course, is his statement. There was some question at the conference of 1852 as to whether one who held the office of president of the Seventies was not the highest in authority, and there was a man there who held that office, and he claimed to be the greatest, Zenas H. Gurley, Sen.

442 Our church recognizes the Seventies as associated closely with the High Council, and as traveling ministers they are the greatest, and as presiding officers the high priests and elders rank first. That is their specific duty as presiding officers.

I could not say of my own knowledge that Jason W. Briggs was ordained in the old church; I did not see him. He told me himself
443 that he was ordained by William Marks. The ordination I spoke of was before the reorganization of the church. There must have been ordinations before the time of the rejection of the church in 1844, and the time of the reorganization in 1852; but I do not know that I saw any of them. I know of instances of that kind occurring.

I have been well acquainted with the doctrine of the church; from the first I heard of it I was very much interested in it, paid very close attention to it, have had close interest and association with it from that time to the present, and I think I am qualified to speak regarding it. The epitome of faith of the church under its old organization is the same as that of the reorganization, touching the principles of the doctrine. What I first heard and believed of the old organization I now believe; and it has been the teachings of the church all along, therefore I can swear I know them to be the same,
445 and identically the same. Yes, sir, the doctrine and revelations since the reorganization in 1852, are the same as the doctrine of the old church from 1830 to 1844, that is, there has been no conflict of doctrine.

There may have been a revelation given in 1834, that did not appear in the 1835 edition of the Book of Doctrine and Covenants. It certainly could not have been a doctrine of the church before it was given, but it certainly was not in conflict with anything that came before it. There was a revelation given in 1838, about tithing,

which afterwards became a law of the church, that was not a binding law upon the church prior to the time it was given, and if there was a revelation given to Deam or Briggs, or any of them in 1851, or 1852, or 1853, about the reorganization of the church, that would not be a doctrine of the church prior to 1844. The revelations given by Joseph Smith in 1860 and 1861 were identical in doctrine with the old church from 1830 to 1844, not identical in language, but were
147 identical in doctrine, there is no conflict. The constitutional principle upon which the church is founded is continued revelations; and if it did come about that they did not have any, the denial of it would not be a denial of the doctrine.

We believe in continued revelation; in other words, that was the doctrine of the old church, and is the doctrine of the reorganization. I do not know as the Utah Church has had any revelations. I know they make that claim, of belief in continued revelations, and I know the Utah Church claims, or its Presidency does, for I heard him make this statement, "I am not a prophet or son of a prophet," and I never heard of a revelation from him, or saw one that purported to
448 come from him. The Utah Church may claim that they believe in revelations, but they never claimed to my knowledge that they received any. I never saw or heard of a revelation that they claimed had been received by them. I never heard that they published a revelation authoritatively, that had been received by them as they claimed. I know they make the claim of being the continuing church based upon the Nauvoo church; the Book of Mormon and the Bible, they claim that as the foundation of their faith, that is, I suppose they do, for I have heard so, and I never heard anything to the contrary.

At the reorganization in 1852 there is a resolution which was passed, that recognizes the Bible, the Book of Mormon, and the Book of Doctrine and Covenants, the standard books and excluding all other works. They did not recognize any other revelation that could not be found in these books as standards of the church. Such is the conference of 1852. The Reorganized Church took the revelations as found recorded up to the date of 1844, the time of the death of Joseph Smith, and no others were accepted; in other words, it took the revelations found recorded in the 1835 edition of the Book of Covenants, and no other revelation was accepted after that date, except the one of 1841.

The Reorganized Church has not declared in its conferences that it recognized all that is in the Book of Doctrine and Covenants as authority; that is not a fact, for there are several lectures that have never been recognized as authority. There are lectures on faith in
449 there, that have never been recognized by the church as authority. I presume they are included in the Book of Doctrine and Covenants, I never saw an edition that did not have them in. I saw that edition since I came here. I stated in my examination in chief, that the Reorganized Church was based upon the doctrines contained in the Bi-

ble, the Book of Mormon, and the Book of Doctrine and Covenants, and I state it so now. The Book of Doctrine and Covenants proper we recognize that as an authority, that part of it which purports to be a revelation; but you must remember that there are these letters and lectures in there, which do not purport to be revelations, and that part we do not recognize as being authority. We recognize them as being good advice, but we do not recognize them in the light of an authority binding upon the church as a law, and we do not ac-
450 cept them as a law, but simply accept them for what they purport to be, simply given by way of advice or instruction to the church, and in that light they are accepted, and in no other light.

Yes, sir, there is a section in the Book of Doctrine and Covenants on marriage. I am familiar with that, and it is stated in that, that one man shall have but one wife, and one woman but one husband; I know that. That is recognized as one of the sections upon which the church has declared to be in authority. That is what would be called a ritual of the church; it does not purport to be a revelation at all, but is simply what might be called a ritual of the church. It is one of the rules which governs the church on the question of marriage. It is authoritative as a rule of government, but not as a revelation. It is authoritative in the church as a rule of action or ritual in the church for the regulation of marriages, and it was so recognized by the church in solemn assembly. It is not a revelation. I
451 did not say the Book of Doctrine and Covenants contained nothing but revelations; it contains many things besides revelations. It contains the law of God in the form of revelations and in the form of certain rules for the government of the church which have been adopted by the church and received its approval in conformity with the laws of God as laid down in the revelations. We recognize the Book of Doctrine and Covenants as containing a part of the law of God, what is necessary for the guidance and government of the church. Yes, sir, I recognize the doctrine of monogamy which permits a man to have one wife, and a woman one husband, as the law of the church; it has been accepted by the church as the law of the church. It is not a law or revelation directly from God, but it is in harmony with the revelations from God; and it does not purport to be a revelation either, but we understand that it is an exposition of a revelation. If a revelation were to be given from a recognized source, contrary to this rule of marriage, and advancing the doctrine of polygamy, it would not be held authoritative by the church. It would be rejected. It would be a false revelation, and the church
453 would not accept it; and if adopted by the church it would still be false. That is my position and the position of the church. It would not make any difference, it would be false, and the acceptance of it by the church would prove that the church was in apostasy. That is not my opinion; I state that as a fact. It would prove that to anyone who knew the situation, that knew the law and teachings of the church.

In 1852 the Reorganized Church held their first General Conference. There were several members of the old church present. I could name the following persons at the conference of 1852, who assisted in the reorganization of the church, who were members of the original church prior to the death of Joseph Smith. Zenas H. Gurley, J. W. Briggs, Silas H. Briggs, David Powell, William Hartshorn, Polly Briggs, also John Williams and Henry Pease. There were others there, of course; but I cannot remember who they were, now. I am assuming that the wives of the men that I have named were there also. I know they were members of the church. There were a great many more of the old members than I have mentioned. I do not remember how many, but there were a good many. There was a branch of the church at Beloit.

The disorganization of the church affected the church as quorums; but wherever there was a branch that kept intact, they were still the church, where six or more of their members maintained their organization. There was one branch near Alton, Illinois, that Elder Greene had charge of, and it kept its organization from the time of the disorganization until the reorganization. It kept its local organization all that time. Jason W. Briggs was presiding elder of the branch at Beloit, and had been for years prior to 1852.

There were several other organizations the same as at Beloit,—branches of the original church; one at Waukeshaw; they all came into the Reorganized Church. I do not remember who was the presiding elder of that branch. William Smith came up there, and preached for a time, and they recognized him, but he did not go to work and organize a branch as I understood it, but he was there, as I understand it, preaching and teaching the doctrine of lineal priesthood, but for some reasons they rejected him. I rather think that Jason W. Briggs was a member of the William Smith faction for a while. William Smith was gathering up these old members of the church, and preaching lineal priesthood, and he came there preaching that doctrine; made some extravagant claims. They simply denounced him at Beloit and Waukeshaw, and would not have anything more to do with him. Jason W. Briggs was one of the party that denounced him.

There was also a man by the name of Phineas Wright, who came from Voree, the Strangite headquarters. He put forth the claim that Strang was the successor of Joseph Smith, and Jason W. Briggs said, "Well, it is all right if he is; if he is carrying on the work the same as Joseph did, we have no objection to it."

My brother, Jason W. Briggs, was never a Strangite, at any time, or a William Smithite; he recognized William Smith as teaching the gospel. He taught lineal priesthood, and he was the first man that ever taught that there; that is, the doctrine of lineal descent as applied to the priesthood. He taught some doctrine that they did not approve; that is the reason that they rejected him. Everybody that knew William Smith, and worked with him, rejected him. I suppose

you could say those who had before that time accepted him as a minister; I suppose you could say by the reorganization in 1852, the minutes of the resolution of that conference are there, where they rejected all who pretended to be successors of Joseph. This resolution covered all kinds, and rejected all who pretended to be prophets as pretenders, and denounced them.

It is not a fact that the conference of 1852 was made up of men who belonged to the William Smith organization, and men who belonged to the Strang organization, and men who had belonged to the Briggs organization, and men who belonged to other scattered organizations. My brother, Silas Briggs, had never united with any of these organizations, he always held to one view, and never joined any of them. They had some of them been associated; that is, they had recognized them, and supposed they were carrying out the ends of the organization, before they knew of the rejection, when they had always stood on the principles of the doctrine as taught in the original church, and while they attended the meetings of these different factions or organizations. They were not what you could call either Strangites, William Smithites, or any of the rest of them; they were simply people who had remained steadfast in the faith, and did not recognize any of these different factions as being the true church, although they might from time to time attend their meetings. Zenas H. Gurley had been with the Strang faction, and he denounced Strang when he saw that he was making innovations; he denounced him as an impostor.

458 The conference of 1852 recognized all members who had ever belonged to the old organization as being eligible to membership in the reorganization; that is, all members who had not vitiated their standing by overt acts against the church. I cannot give you the date when the branch at Beloit was organized, but there was a branch there organized and continued all the time. Part of the time it was very active, and part of the time not so active. In 1851 they had quite a large branch there. There were other branches with which the Beloit branch had communication or connections; there was one at Waukeshaw, and there was one in Voree. I do not know the number that belonged to these branches, but I know there were quite a number at Waukeshaw, and a good many of the members there were relatives of mine. Of course they were all independent
460 branches and had no uniform identification one with the other, but at the time of the conference of 1852, there were representatives from all of them assembled there at that conference. There were resolutions passed there to recognize all the branches, wherever six or more members assembled together, who had been members of the old organization, as members of the Reorganized Church. I was a member of the church in 1852. I was not there in the Beloit branch, however, at the time William Smith was there, I was not there when the claim was made by William Smith that he was the President of the Church. That is what caused the rejection of him.

462 It is not a fact that Jason W. Briggs at that time recognized William Smith's claim. It was when William Smith was making the claim that he was temporarily the head of the church until the legal heir came forward. Now that was the position Mr. Smith took, that when the legal heir came forward and claimed his inheritance, (and that was the son of his brother,) he was to be recognized as the legal heir, and he was representing him until that time, and William Smith was recognized as such and accepted as such until the legal heir to the Presidency came forward. When he came first it was in 1850, probably.

Zenas H. Gurley was at the conference of 1852 at the time of the reorganization. He came from the Blanchardville branch; prior to that time it had been called the Yellowstone branch. There was a branch they called Zarahemla; that branch was raised up by Gurley, and some one else, I do not now know who. Gurley came to the
463 conference the same as the rest of them did, as a delegate. He and Elder Powell came as delegates from the Yellowstone branch. Silas Briggs never came from any branch; he did not have to come from any branch; he was a member of the old organization. Not as a matter of necessity. Anyone who belonged to the old organization had a right to sit in that conference as well as the delegates from branches. David Powell appeared in that conference as an elder. He represented the organization because he was a member of the branch there—the Beloit branch. He lived at Beloit, but at that time was out on a mission at Blanchardville. He appeared at that conference as an elder reporting his mission at Blanchardville in connection with Elder Gurley. Elder Hartshorn resided at Beloit. I could not say that he was more than a member of the branch there;
464 he may have been an elder; but if he was I am not apprised of the fact. He was a member of the branch and that fact would give him a membership in that conference. All members of that branch were members of that conference. They were members of that conference by virtue of being members of the church; that was a law of the church at that time. All the members had a voice in the conference, —had a right to all the privileges of the conference. The law prevailing at that conference, admitted all members of the old church to the privileges of the conference, and they were privileged to take part in the conference; that is a law of the Reorganized Church at the present time, with the exception that they have certain privileges now that were not recognized then as delegates, in the sense in which they are appointed delegates, and then we did not have any such regulations. At that time all the members of the church were entitled to membership in the conferences, and were entitled to all its privileges. There were some of them called *ex officio* officers.

Yes, sir, it is a fact that notwithstanding we have twenty-five thousand (25,000) members, all these twenty-five thousand (25,000) would have been admitted to the conference held here during the present month, if they saw fit to attend; but it is not likely that the

whole membership of the church will ever desire to attend a conference at one time. That privilege inheres to every member of the church, to some as officers, and to others as members of the church, and the whole twenty-five thousand (25,000) would have been entitled to all the privileges of the conference, if they had been present. Conferences are composed of the members of the church, of all its members, some of them can vote, delegates representing so many votes. Credentials are required of them, that is, as delegates they are required to present credentials identifying themselves as the
465 parties they purport to be. Conferences are based on delegates and members. At the last conference held here, this month, if you had attended it, you would have seen some things passed there and voted upon by all who pleased to vote.

At the conference of 1852 Polly Briggs was present; she was a
466 member of the old organization; she had never united with the reorganization, at that time. She belonged to the branch that used to be in the old organization, the same as it had been all the time. My mother was baptized in 1843; I was nearly eight years old at the time. She was recognized after that as a member of the church, and claimed to be.

I know Zenas H. Gurley was a member of the church prior to 1844, by the record and his own statement, but I did not see him baptized. I did not see Jason W. Briggs ordained an elder in the
469 old church; I did not see him ordained an elder nor a high priest. Henry H. Deam was a high priest in 1852; he was so understood by the church. His ordination was in the old organization; he was received as such into the reorganization, and understood to be such. He was ordained before the death of Joseph Smith; he was not present at the first conference; I mean in June, 1852. Yes, sir, I said that the original church was rejected. The evidence of its rejection was the taking away of its two principal officers, the two presiding officers of the church. The evidence as to the time of its rejection fixes it on June 27, 1844.

RE-EXAMINATION.

482 I stated on cross-examination that it was not necessary in order to become a member of the Reorganized Church to believe in certain things; but on the question of marriage, a man must believe with reference to that, that a man should have but one wife, and concubines none. If a person who believed that Adam was God should desire to become a member of the church to which I belong, he would be rejected, because the doctrine that Adam was God is a false doctrine, not taught by the church; the same is true of the doctrine of blood atonement; he could not be received as a member if he believed that, except in the case of the shedding of Christ's blood. Our test of membership is that a person who believes in the doctrine
483 of Christ as taught in the New Testament, would believe in the revelations of God found in the Bible; it is a sequence that follows the basis, and upon that basis, believing in these things, he would

eventually believe in the Book of Mormon and the Book of Doctrine and Covenants, as a necessary conclusion.

I was sent as a missionary to Utah in 1863; had charge of what is known as the Rocky Mountain Mission. I think it was called the "Western Mission," at that time. I became acquainted with the elders of what is known as the Church of Utah; heard them preach occasionally; met them, but not very often. With regard to the teachings of the members of the Church of Utah, I know that they were taught directly in opposition to the teachings of the Bible, the Book of Mormon, and the Book of Doctrine and Covenants. They are simply taught to follow the counsel of their elders. They used the words *file leaders;* they are taught to follow their file leaders, and if the act be wrong, the sin will be upon the leaders, and not upon the members.

Delegates are chosen to conferences for the purpose of giving a
484 voice and vote to every member of the church in these conferences; that is for the purpose of giving representation in the conference to those who cannot be present, as well as to those who can be present. Yes, sir, it is a logical deduction that delegates carry the votes of others. Paragraph two, page 159, Exhibit 4, is as follows: "The only qualifications to eligibility to the office of delegate from district to General Conference shall be membership and good standing in the Church." There is no other qualification known to the church. Paragraph 5, section 105, Exhibit J, commencing near the middle of the seventh line of the paragraph, at the words, "and after their tribulation," etc., that is the quotation I had reference to in my
485 cross-examination. It reads as follows: "Pray for thy brethren of the twelve. Admonish them sharply for my name's sake, and let them be admonished for all their sins; and be ye faithful before me unto my name. And after their temptations, and much tribulations, behold, I, the Lord, will feel after them: and if they harden not their hearts, and stiffen not their necks against me, they shall be converted, and I will heal them."

I stated in my cross-examination about the rejection of the church, and started to quote some passages from the standard books with reference to that subject. Now I give the authority I desired. Section 107, tenth paragraph, page 304, Exhibit J, reads as follows: "But I command you, all ye my saints, to build an house unto me; and I grant unto you sufficient time to build an house unto me, and during this time your baptisms shall be acceptable unto me. But, behold, at the end of this appointment, your baptisms for your dead shall not be acceptable unto me; and if ye do not these things at the end of the appointment, ye shall be rejected as a church with your [illegible]ead, saith the Lord your God." In Exhibit 10, to which my attention [illegible]was called on cross-examination I find the following, commencsmuce[illegible] page 20, at the word *at* in the ninth line from the bottom of the[illegible]re: "At a conference of the church held at Yellowstone
542 declar[illegible]a Fayette county, Wisconsin, October 6, A. D. 1852, the

foregoing pages were presented and approved, and ordered to be published with the sanction of said conference. The next semiannual conference of the Church of Jesus Christ of Latter Day Saints will be held at the same place, commencing April 6, 1853, which the scattered priesthood, and especially delegates from the different branches, are requested to attend." The signatures to this are, J. W. Briggs, Z. H. Gurley, and J. Harrington, committee.

The part of Exhibit 10 to which my attention was called on cross-examination this morning was never presented to the conference, nor by any conference ordered printed; that was not read to that conference at all, and it was not written at the time of that confer-
486 ence, nor until some time afterwards. The remaining pages of the pamphlet marked Exhibit 10, were never presented to any conference at any time, was never passed on by any conference, nothing in the paper so indicates it. In yesterday's cross-examination with reference to the question of lineage I made a quotation from memory, from Exhibit E; that exact quotation is found in section six, paragraph 3, page 99, Exhibit E, as follows: "Therefore thus saith the Lord unto you, with whom the priesthood hath continued through the lineage of your fathers, for ye are lawful heirs according to the flesh, and have been hid from the world with Christ in God: therefore your life and the priesthood hath remained, and must needs remain, through you and your lineage, until the restoration of all things spoken by the mouths of all the holy prophets since the world began. . . . Therefore, blessed are ye if ye continue in my goodness, a light unto the Gentiles, and through this priesthood, a savor unto my people Israel; The Lord hath said it: Amen." And on the same subject a quotation I attempted to make from memory on page 307, paragraph 18, Exhibit J, reads as follows: "And now, I say unto you, as pertaining unto my boarding house, which I have commanded you to build, for the boarding of strangers, let it be built unto my name, and let my name be named upon it, and let my servant Joseph and his house have place therein, from generation to generation; for this anointing have I put upon his head, that his blessing shall also be put upon the head of his posterity after him; and as I said unto Abraham concerning the kindreds of the earth, even so, I say unto my servant Joseph, in thee, and in thy seed, shall the kindred of the earth be blessed. Therefore, let my servant Joseph, and his seed after him, have place in that house, from generation to generation, forever and ever, saith the Lord, and let the name of that house be called the Nauvoo House; and let it be a delightful habitation for all men, and a resting place for the weary traveler, that he may contemplate the glory of Zion, and the glory of this, the corner stone thereof; that he may receive, also, the couns-
487 from those whom I have set to be as plants of renown, and as w[illegible] men upon her walls."

And on the same subject, section 104, paragraph 42, Ex[illegible] reads as follows: "And again, the duty of the president [illegible]

fice of the high priesthood is to preside over the whole church, and to be like unto Moses. Behold, here is wisdom, yea, to be a seer, a revelator, a translator, and a prophet; having all the gifts of God which he bestows upon the head of the church." The book I referred to yesterday and to-day on the question of representation in
499 the old church is Exhibit L, the *Times and Seasons*. I read them as they were published in 1842 and 1843, and the minutes of the conference recorded on page 763 of Exhibit L, is what I referred to in my cross-examination as the rule of representation. That was the official paper of the church in 1842, and up to 1844; but these minutes were published in 1841. It is in the issue of 1842, but it was for the conference of 1841. The occurrence took place before I was acquainted with the work, for in 1842 was the first time I became acquainted with the work. The minutes of the conference to which I have referred on cross-examination was on page 763 of Exhibit L,
500 third paragraph, as follows: "Reports of delegates being called for, Elder Foster reported that the whole number of persons who had been received into the branch at New York was two hundred and ninety-two, of which two hundred and seventy-nine were received by baptism and confirmation, and thirteen by certificate. Of these, four have died, ninety-six moved away, and thirteen have been excommunicated; leaving one hundred and seventy-nine, of whom there are a president and two councilors, a bishop and two councilors, eleven elders, two priests, one teacher, and two deacons.

"The branch at Setauket, Long Island, was represented by Benjamin Hulse, teacher. That branch was organized on the 27th of March, 1841, with eighteen members, two of whom have been preachers, one a Baptist, and the other a Methodist. The number has since been increased to forty-three, of whom six have been cut off, leaving at present thirty-seven, among whom there are two elders, three priests, one teacher, and one deacon, organized and built up chiefly by Elder Sparks. The cause is still progressing in that place."

And from the same book, the *Times and Seasons* as before identified in this case by Joseph Smith and William Blair, on the witness stand, and which was used in connection with their testimony, I read the following, as applying to representation in conference: "Minutes of a conference of elders and members of the Church of Jesus Christ of Latter Day Saints, held in the city of Philadelphia, Saturday, October 17, 1840." Commencing at the middle of page 215, in the right hand column: "Elder L. Barnes represented the church in Philadelphia in a prosperous condition and numbering, including three elders and two priests, two hundred and forty.

"Elder George J. Adams represented the church in New York—in [illegible]flourishing condition. He stated that three places for regular [illegible]ing were now established in that city, and there prospects
542 [illegible]ver better before, nor as [illegible] at the present time; and declare [illegible]ding to the best of his [illegible]e the church in New York,

including ten elders, now numbers over two hundred members.

"Elder Adams also represented the church in Brooklyn, Long Island, in a flourishing condition, consisting of nineteen members, including one priest, one teacher, and one deacon. Also the church in Hempstead, Long Island, in care of Elder Lane, consisting of fifty members.

501 "Elder Adams also represented three other small branches of the church in Monmouth county, New Jersey, under the care of Elder J. G. Divine, one in Shrewsbury, containing sixteen members. One at Keysport and Granville, numbering thirteen; including one deacon: and the other at Sharp River, of six members, including one deacon, (thirty-five in all.) The last two branches named have been built up since April last by Elder Divine. He stated that seven had lately been baptized in the city of Newark, New Jersey; and gave a very glowing and cheerful description of the spread of the work of God in the regions round about New York. He stated that he had preached to five thousand persons at one time in the city of Newark, New Jersey, who listened with attention and apparent admiration and surprise to the everlasting gospel—and to use his own words, 'the work of God was flourishing gloriously—the Macedonian cry was general; not to come over to Macedonia, but to come over to Brooklyn—and over on Long Island—come over to Elizabethtown—and to Newark, and to Jersey City, and let us hear the fullness of the gospel of Jesus Christ proclaimed.'

"Whole number represented by Elder Adams, three hundred and eleven.

"Conference adjourned for one hour and a half.

"Two o'clock p. m., conference again assembled.

"Elder E. Malen represented the Brandywine church in Chester county, Pennsylvania, in a flourishing condition, numbering one hundred and thirty-five in good standing, including four elders, three priests, one teacher, and one deacon."

RECROSS-EXAMINATION.

The *Times and Seasons* was an organ of the church prior to 1844; it represents E. Robinson and D. C. Smith as being editors and proprietors at that time. I do not know how they came to be the editors and proprietors. There may be something explanatory on the subject; but however that was, it was understood that they were the editors. I mean to say that it was understood to be the church organ, or the church paper, the same as the *Saints' Herald* is now. I
502 do not know that it was ever published by a Board of Publication, authorized by the church. Page 782, from which I have just read in the *Times and Seasons*, reads as follows: "The *Times and Seasons* is edited by Joseph Smith. Printed and published about the first, fifteenth of every month, on the corner of Water and Bain St[illegible] Nauvoo, Hancock county, Illinois, by Joseph Smith. Terms [illegible] Dollars per annum, payable [illegible]cases in advance." The [illegible] again, [illegible]

Smith referred to in the quotation was the President of the Church at that time, he was also at the same time editor of that paper or publication.

HIRAM RATHBUN, SENIOR, of lawful age, being produced, sworn, and examined on the part of the Plaintiff, testified as follows:—

My name is Hiram Rathbun; I live in Lansing, Michigan, at the present time. Before going to Lansing I lived in the town of Oneida,
503 Eaton county, Michigan. I was seventy-one years old my last birthday, the 3d day of April last. My avocation of life has been that of a practicing physician. I practiced medicine from about the last of 1846 to about three years ago. Since then I have not been practicing any to amount to anything. I lived at one time in the State of Missouri. I first came to the State of Missouri, late in the summer of 1831, and I remained here until the month of November, 1833. I lived in the county of Jackson, at Independence, here in the city of Independence; but it was not a city at that time, it was nothing but a small town or village, for there was not a great many people living here at that time. Some of the people who lived here at that time were Peter Whitmer, David and John Whitmer, and a number of others of the Whitmer family, but I would not pretend to give all their names. There was enough of them here to make what was called the "Whitmer settlement." That was six or eight miles from the village, and there were also a number of others here. A man by the name of W. W. Phelps, also Oliver Cowdery, and Sidney Gilbert; he kept a store down here on the square. A good many of the people who were here at that that time I do not now remember, but I remember the ones I have named all right.

Yes, sir, I remember Edward Partridge; he lived here at that time. I was quite well acquainted with Edward Partridge; he was the Bishop of the church here at that time—the Church of Jesus
504 Christ of Latter Day Saints, as it existed at that time. I believe that all the other persons I have mentioned were members of the church with Edward Partridge. There were some citizens outside of those I have named who belonged to the church, but I cannot remember their names, and there were others living here that did not belong to the church. I do not remember many of the people who lived here at that time, but some of them I do. My father lived here at that time; his name was Robert Rathbun. He belonged to the Church of Jesus Christ of Latter Day Saints. He was a blacksmith by trade. I was a member of the church at that time; had joined the church in the month of November, 1831.

The meetings of the church at that time were held in a log house [illegible] they used as a schoolhouse, and the meetinghouse was located [illegible] on the Temple Lot or very near by it. I would not say that the[illegible] right on the Temple Lot; but if it was not on it, it was very
542 decla[illegible]t, and in pleasant weather in the summer time and the fall

when they were having two-days' meetings at a time, they had them on the Temple Lot in the woods. Edward Partridge lived at the time in a log house there on the Temple Plot, (I call it Plot, some people call it Temple Lot,) or close by it, for I would not say positively it was on it, but if it was not on it, it was very close by it. It has been a great many years ago, and I was quite small at the time. I remember right well where his house was, and believe I could go to it if the town was now as it was then; but things have changed so much I cannot say as to that. I am under the impression that it was on the Temple Lot; however, it was very close to it. I cannot say really whether it was on the Temple Plot of ground, or whether it was on this side of it; but he lived down there near it, if not on it.

I have seen, since I have been in the city of Independence, this time, what is called the Temple Block. The last time I saw it before was in 1885, and before that I last saw it in 1833. This piece of ground, known as the Temple Lot, that I have seen since I came here this time, is the same piece of ground upon which the church held meetings from 1831 to 1833, so far as I can see in regard to the direction and locality,—it appears to be the same ground. Of course
505 I cannot say positively that it is the same. At the time you refer to in your question, from 1831 to 1833, this ground was in the woods, and it was not cleared, but the locality is the same, the same direction and the same distance and all, and as far as I can say, basing my opinion upon the best of my judgment, it is the same.

Members of the church were living here from 1831 to 1833. They left here in the month of November, 1833. The occasion of their leaving was that they had to leave. They were driven out of the country by the citizens of Independence and the vicinity. They were driven out by the people around about here.

The cause of their being driven out, the people here became dissatisfied and displeased with the citizens here known as the Church of Jesus Christ of Latter Day Saints; that is, the citizens who did not belong to that church became dissatisfied with the citizens who did belong to it. The church members had some peculiar sentiments that were antislavery, while those here were proslavery; and then their religious sentiments were different from those of other people here, and that excited some friction. There was a difference between the religious and political sentiments of the class of citizens that belonged to the Church of Jesus Christ of Latter Day Saints, and the
50 citizens that did not belong to that organization, and that difference eventually led to friction, and finally the citizens who objected to the people that belonged to the church became so dissatisfied that they rose up in what we called mobs, and met together and held some meetings, and passed resolutions, and proceeded to such extremities, that finally they drove them out. They met, finally, and did a good deal of damage and mischief to the people. There were several instances of mob violence, and on one instance they

houses here. The houses of the people who belonged to the Latter Day Saints Church. They stoned them at night, after dark. I know that, for amongst the others that were stoned was the house of my father, and they did that although at the time my father was away with some of the others in council. I do not know why, but our house was stoned, and the door was broken open. One stone as large as my fist struck my mother, and she screamed murder, and then they run away at her screaming. The next morning, very
506 early, I went through the village, and I found Mr. Phillip's house torn down, and the printing office, which was in the upper room of, I think, a brick house, with a stairway on the outside that went up to the printing office, and the printing press was broken, the type and all the furniture of the office was thrown down into what we might call a jamb, piled together, and the printing press was broken and the little boys came around and carried off the type and other things as they saw proper, and Mr. Gilbert's store was broken into, and his goods taken out on the street, and the bolts of factory and calicoes, and cloth, etc., were unrolled. It had the appearance of having been taken by the end and running off with it until they unwound them. The streets were almost covered with these pieces of cloth that were unrolled in that manner, and other goods scattered around. My father's shop was broken into, and his tools thrown out on the street. That was the condition of things the morning after this demonstration or outbreak. Things were in a state of great confusion, for everyone was greatly excited at the time; but things run along for a couple of days, and then they caught some of the elders of the church here, and among them my father and brought them up here to the square to tar and feather them. My father made his escape, but he was the only one that did escape, and the others were tarred and feathered. I know that, for I stood but a short distance away, and could see it done. If my memory serves me right there were three tarred and feathered; there was Bishop Partridge, a man by the name of Allen, the other name I do not remember. I remember very particularly in regard to Bishop Partridge and the manner in which he went away.

Well, finally the women and household goods of the members of the church were taken to the Temple Lot, and piled up there on the Temple Plot in the woods; and we were there, I think it was three days. I would not be positive, but I think it was about three days we were there in the woods, and they were yelling and hollering and swearing and shooting around there night and day. We could not go to sleep, and our condition was about as bad as bad could be, from almost any point of view. Finally the time came when we were to move and cross the river. We crossed the river down here
[illegible] about three miles,—got over on the other side. These are about the
[illegible]es of the particulars regarding the expulsion of the people, as
[illegible]mber them. The people left Independence, and crossed the
542 declar[illegible]ough fear of violence, and to [illegible]ve our lives.

After we had crossed over awhile the river froze up, and they sent out a proclamation from Independence, from the merchants, stating that if we wanted to trade with them that we were to pass over and repass unharmed and unmolested, and under this proclamation my father and I came over here to Independence, and father did some trading in the store where Mr. Gilbert had his goods, but at that time it was in the possession of some other gentleman. I do not remember his name, but he was selling goods there in the store that Mr. Gilbert had before that time. Father went into the store, and I was with him, and commenced buying some goods there. Pretty soon there was about a dozen men came in, and some of them accosted him very abruptly, swearing at him and threatening him, and the clerk then told him to come in and get his salt weighed out. Then the merchant himself stepped up to the crowd and told them that he wished they would not disturb the house, and they said they would not disturb the house, but they would attend to that damned Mormon. He finally got through and got out of the place and got across the river when we saw parties come to the bank after us. After we got on the other side of the river, my father rented a house two or three miles from the river, and then he went into Liberty, and rented a shop there, and set up his business there; but he worked awhile, before he set up his business independently, for a man by the name of Hopewell.

So far as I remember all the members of the church were driven from Independence. When we crossed the river we were in Clay county. We staid in Liberty a short time, and then Mr. Arthur (I believe was his name) engaged my father to do some work for his mill, the ironwork of his mill, and a Mr. Durfy to do the woodwork, and we staid there about a year; then some of the citizens got uneasy about our being there, and there was an arrangement made between some of the leaders of the Latter Day Saints and General Doniphan, General Atchison, Colonel Wallace, and Colonel Thornton, and some others whose names I cannot remember; but these I have mentioned I was personally acquainted with. The arrangement was made to the effect that the Latter Day Saints should go into a new country, into Caldwell county, and they should not be disturbed, and so they went over there. My father was called to Kirtland, Ohio, at the time of the dedication of the temple there, and I hired out with a man by the name of Newberry, and with him I was one of the first to go to Caldwell county to make a location in sight of Far West, or near Far West.

I believe they were driven across the river from Independence, into Clay county; went from Clay county to Caldwell county, and they built up a city there called Far West, and there was another location at what is called Haun's Mill. I do not know the number that went, b it was generally reckoned to be about twelve hundred (1,200). A the same number were driven from Independence, here, but ther a great many there who came into Caldwell county from the

knew a man at Far West by the name of Oliver Cowdery; it was the same Oliver Cowdery who formerly lived here at Independence. I knew him here at Independence, before he went into Caldwell county. I had seen him once or twice before my father moved to this county in 1831. I think it was in 1830, that I saw him in Ohio. I saw him
509 here I came here. He did not have any family when he first came here, I think. I think he was married here at Independence; he had some family at Far West, I do not know how many children he had at Far West; I remember but three. I remember John Cowdery, Joseph Smith and Jane Cowdery. I saw Oliver Cowdery in Far West from about 1833 to 1838; during 1835, 1836, 1837, and 1838, are about the years he was there. I saw him in Caldwell county, at various times during these years; his family was there with him in 1838, that is my recollection that they were with him at that time. The people remained there at Far West from the time they went in there sometime at the close of 1834, they remained in there until the fall of 1838.

Their occasion for leaving Caldwell county was because they were driven out from there also, the same as they were driven out of Jackson county. They were driven out of Caldwell county, through orders issued by the governor of Missouri. There were some instances that occurred along, you know, that gave rise to trouble. I remember one incident very distinctly, that created quite an impression on my mind, and that was the election that was held after they got the county organized there. They came to elect a representative to the State legislature, and there were two parties that had nominees in the field; one was the Whig party, and the other was the Democratic party. I saw both these gentlemen that were nominated for the office, and heard them speak at Far West, and the gentleman on the Whig ticket was quite a talker, and the other one on the Democratic ticket was not so much of a talker, but was a candid citizen living at Kingston. They wanted to know of the gentleman that was running on the Whig party ticket, if he was elected, what he would do for the Latter Day Saints? If he would do anything in the legislature to secure their rights to their lands, especially in the county of Jackson, and he was disposed to make any promise of any kind that he thought would bring him votes, and the other man he was ready and willing to make the promise that if he was elected, and any measure that came up in the legislature in which they were interested he would use his influence in favor of that side of the measure that they would be personally or collectively interested in, and he furthermore promised that he would introduce a measure or bill for the security of their rights, or rather the restitution of their rights, and this became known among the Latter Day Saints, and they all took to this man when
542 they came to vote, without regard to their previous political affiliations or sentiments. That did not play any part, and they all voted declared man, (I have forgotten his name but he lived at Kingston,)

and they elected him, and the other man was of course left in the shade, for the county was filled up with Latter Day Saints, and the way they went was the way the county went. From that time there was never any let up on the persecution to which the Latter Day Saints were subjected, for it excited a spirit of total unrest, and it did not subside until they were driven out of the county,—or State, I should say. That was the first incident that caused trouble.

Well, another thing that caused trouble, I might say the primary or immediate cause of the trouble that finally led to their expulsion, was that there were quite a number of people encamped on Crooked River, and they were foraging off the Latter Day Saints there. They were taking sheep, hogs or swine, chickens, and bees, and were subsisting on us, and that is where the trouble commenced. The Latter Day Saints raised a party at Far West and sent them out, under the head of one Mr. Patten, and they went out in the night and surprised them, and they rather demoralized them, for they absconded and left their camps, and whatever they had taken from the Latter Day Saints that could be found and identified was taken back. The Latter Day Saints took what they knew belonged to them, and took it back again. Then those people sent notice to
50 the Governor in regard to this, claiming that the Latter Day Saints had broken in upon them and shot at them, and the Governor called out some six thousand (6,000) men, and came on to Far West with them; and when he came there he ordered them to surrender, and Joseph Smith and Sidney Rigdon surrendered, and their arms were taken, but they had not any only the commonest arms,—rifles and shot-
511 guns, were all they had in the way of arms. Then this force that came with the Governor took their arms, and they took their prisoners, and held a court martial over Joseph Smith and Sidney Rigdon, and sentenced them to be shot the next morning at four o'clock, and Governor Boggs issued a proclamation of extermination of the Latter Day Saints, men, women, and children, from the State, and General Atchison raised a mutiny to this, and called out his men, and stated he was no butcher, and took his men home; but General Doniphan remained with the army that had come there, with his men, and when he heard the court martial sentence these men to be shot, he refused to sign their decision, and told them that he and his men were not murderers of persons that were committing no offense, but simply defending themselves from unlawful violence, and he said they were entitled to trial in the civil courts under the civil law,
50 and if they had committed any crime, to be punished under the laws of the State.

Well, Governor Boggs and General Doniphan had some controversy about the matter of executing the court martial's sentence, and General Doniphan told Governor Boggs plainly that he and his were not murderers, but that they were soldiers, and unless the leased these men forthwith and give them a trial in court, t morning at four o'clock they would find out that he and

were soldiers. I have been stating the occurrences as I heard it from the lips of General Doniphan himself, and I know it to be, for I was there at the time, and saw the most of it. Finally the Governor gave the Latter Day Saints three months to get away, and on those conditions they agreed to go, and went. The people went from Far West to Illinois, to a place that was afterwards called Nauvoo. I was at what was known as Haun's Mill in Caldwell county, I was there in 1835. There are some incidents in my life
512 that impress me with that date. In the latter part of 1835, 1836, 1837, and 1838, these things occurred. I was at Haun's Mill at the time of the massacre, that occurred in 1838, under the proclamation of the Governor to exterminate Mormons, Nehemiah Comstock, captain of the militia with whom I was acquainted, raised about two hundred and fifty (250) men, and came down to Haun's Mill, and while on his way there he stopped at my uncle's house, and they went in and wanted their arms; their guns I believe they demanded. They did not take their arms, but went on down to the mill, where we all were, and when they came up the first thing we heard was "fire," and they did fire, and kept on firing until a man by the name of Evans, a Latter Day Saint, ran out and held up a white flag, and asked them to stop shooting, that he would surrender; but they kept on shooting away, so he ran with others to get away. While they were running they shot down some of them who were attempting to escape, and so we all ran into an old blacksmith shop that was made of logs not notched down closely, and they kept on shooting, and shot them down in there. After the shooting was over, and the militia had gone away, the ones who had escaped came back and took care as best they could of the wounded and the dead. I was shot through one of my limbs. After they got through taking care of the others, my father and uncle came and put me on a litter, and carried me into the house, and from that wound I am crippled for life.

513 There was no fight there, because there was no resistance made at all. There was no resistance upon the part of the Latter Day Saints. There were nineteen killed, but history does not state but eighteen as having been killed, but I know there was nineteen according to the names of the ones that were killed. I was personally acquainted with every one that was killed, and I carried their names in my mind for a good many years, but I have forgotten them now. I belong now to the church known as the Reorganized Church of Jesus Christ of Latter Day Saints. I united with the Reorganized Church the 26th day of October, 1884.

Paragraph one, page 154, of Exhibit E, section 27, reads as fol-
15 lowing: "Hearken, O ye elders of my church, saith the Lord your
17 God, who have assembled yourselves together, according to my
[illegible]commandments, in this land which is the land of Missouri, which is
the land [illegible]nd I have appointed and consecrated for the gathering of the
542 declaration; wherefore this is the land of promise, and the place for the

city of Zion. And thus saith the Lord your God, if you will receive wisdom here is wisdom. Behold the place which is now called Independence, is the center place, and the spot for the temple is lying westward upon a lot which is not far from the courthouse: wherefore it is wisdom that the land should be purchased by the Saints; and also every tract lying westward, even unto the line running directly between Jew and Gentile. And also every tract bordering by the prairies, inasmuch as my disciples are enabled to buy lands. Behold this is wisdom, that they may obtain it for an everlasting inheritance." The lot referred to in that revelation I understand to be the Temple Lot, at Independence, the same lot that is in controversy in this suit.

CROSS-EXAMINATION.

514 Yes, sir, I have read from the Book of Doctrine and Covenants, Exhibit E. I have seen that book before, perhaps not this identical book before, but I have seen a great many just like it before to-day, but I may not have seen that volume. This is the Book of Doctrine and Covenants; I do not find any title page in it. I find the preface, but no title page, and do not see where there has been any. I suppose the title pages are all the same, for they are all of the same edition. I would know the title page if I saw it; I do not know of any reason why I would not. The title page you hand me in that volume, reads: "Doctrine and Covenants of the Church of Latter Day Saints, carefully selected from the revelations of God, and compiled by Joseph Smith, Junior, Oliver Cowdery, Sidney Rigdon, and Frederick G. Williams, presiding elders of said church, Kirtland, Ohio," etc. "Printed by F. G. Williams & Company, for the proprietors, 1835." This seems to be the title page that should be there. Yes, sir, that is the title page that ought to be in Exhibit E, it bears the same date, and commences the same way, and I do not see anything irrelevant to the regular title page. I mean that by comparison both commence in the same way so far as they are entire, and I see no reason why this should not be the proper title page. I mean to say that this book if it had a title page would be exactly the same as the other one. Both books are alike with the exception that one has the title page and the other has not, that is all the difference I can see in them.

515 It is admitted that the title page as read by the witness from the edition of 1835, of the Book of Doctrine and Covenants, is the title page that properly belongs to Exhibit E, which has been destroyed in some manner, and is now missing.

At the time the church was in Jackson county, here, it was called the Church of Jesus Christ of Latter Day Saints; that was from 1831 to 1833. This book was published in 1835. I was not so familiar with the 1835 edition of the Book of Doctrine and Covenants as I am with later editions. Formerly I knew more about it; I might say I was pretty familiar with it, but that was a good while ago. I was familiar with it then, but I cannot say that I am as familiar

it now, as I am with the later editions. I cannot state when I first saw it. There was a book in the early days of the church called the Book of Commandments; I believe that was what it was called. I I have seen that book, but cannot recollect much about it. I never owned one. I would not undertake to identify one now; I do not think I would be safe in saying I could identify one now, although I
516 have seen one or two, possibly three. I think in the Book of Commandments the church was called the "Church of Christ," if I am not mistaken. I have it in my mind that there was an earlier book, prior to the Book of Doctrine and Covenants; I am almost positive it was before. I said that the church in 1831, when we were here at Independence, was called the "Church of Jesus Christ of Latter Day Saints." Now that is my recollection of the church at that time, but it is barely possible that the name was settled on at a later date than that, because at the onset the church was simply called the "Church of Christ," then it was called the "Church of Latter Day Saints," and finally the name was settled on, as being the "Church of Jesus Christ of Latter Day Saints." I do not know just when it was
517 settled on, but I think it was settled on at a later date than 1831. I am quite sure that it was on a later date than 1831, but at that time there was a good many of the leading members of the church calling themselves, "The Church of Jesus Christ of Latter Day Saints," and in view of a discrepancy among them, so to speak, and to avoid confusion and error, they finally, at a later date, settled on what the name should be called in full. That might have been in 1832 or 1833, or somewhere along there, possibly as late as 1834, but I do not think it was later than 1834.

No, sir, at the time I was here in 1830 and 1831 I am not mistaken as to the name they called themselves, such as the Bishop and Oliver Cowdery, and some of those, and there were some,—well, the Whitmers for instance,—they were disposed to call themselves the "Church of Christ," and there were others, that called themselves the "Church of Latter Day Saints," or the "Church of the Latter Day Saints," and to tell you the fact about the matter, this confusion amongst the members as to the name or title of the church was made the subject of special prayer by Joseph Smith himself, and he got what he said was from the Lord, a revelation, that the name should be the "Church of Jesus Christ of Latter Day Saints," and that finally settled it, and established the name universally among the Saints, whereas it had not been universally known among them before that. I cannot give the date of that revelation. I know a church that is called the "Church of Jesus Christ of Latter Day
518 Saints." I do not know of any regularly established church of that
519 name, that is they were a branch of the Mormon Church. If there
520 such a church I have not been in possession of that knowledge. I
521 tell one known of some individuals at different places calling themselves
542 declare that name, or calling themselves the "Church of Jesus Christ,"

but I have not known of a regularly established church calling themselves the "Church of Christ," except that I have recently heard that a church, formerly known as the "Campbellites," now call themselves the "Church of Christ." I have understood that there was a sect of the Mormons in this vicinity that were calling themselves the " Church of Christ," but I supposed it was just a transient matter that did not amount to anything. I did not hear that they had any body that entitled them to that name. There are several places where you find people who call themselves the "Church of Christ," and their doctrines will differ widely. I know some people in the State of Michigan who called themselves the "Church of Christ," yet they were not a regularly established and organized church.

Yes, sir, these parties or members whom I referred to here at Independence, call themselves the "Church of Christ;" that is, so I understand it. I am not acquainted with their faith at all, and I am not familiar with it, nor have I ever heard one of them expounding, preaching, or talking, and I have never had any conversation with any of them. It seems to me that in 1885, when I was here, I had some conversation with him on the Temple Lot, it was a kind of a friendly chat, and was nothing in relation to the church.

Q.—Doctor, do you remember whether, since 1830, 1831, or 1832, there has been anything added to the doctrines of the church; anything added, I mean, that was not identical, that was not the doctrine of the church at that time. *A.*—I do not know of any additional doctrines that have been added to the church from the first day to the present, not in the Church of Jesus Christ to which I formerly belonged, and the church to which I now belong. No, sir, there
519 has been nothing added; there has been some elaboration, but nothing added—the doctrines are identical. There has been additional revelations given since the first. The church believes in the doctrine of continued revelations and direction from God. They are included in the books now used in the Reorganized Church of Jesus Christ of Latter Day Saints. The name is the same as it was in 1830 and 1831. Of course it has the prefix added, *Reorganized*, that is, the word *reorganized* is in the name now. That is an applicable prefix, and if you will allow me to state I will say that I think it would have been applicable as a prefix when it was first organized in 1830. In 1830 they called it then the "Church of Christ," and from that time on for a few years it was so called, but I think it was about 1833 or 1834, that the matter of the name of the church was fixed, changing it to the name of the "Church of Jesus Christ of Latter Day Saints;" but prior to this time that name had been used by some of the Saints in referring to the title of the church, and the matter of the name of the church was a matter in confusion up to that time. The name was finally settled in this manner, but I do not pretend to fix the date. I do not understand that the name of the church in 1830, was authoritatively fixed or settled through the medium of a revel

at all, and I do not think the name was authoritatively fixed until it was settled to the name of the "Church of Jesus Christ of Latter Day Saints."

I know of a doctrine of baptism for the dead. The church when it was here at Independence, Missouri, believed in that just as it is stated in the New Testament. They are not in the habit of preach-
520 ing it publicly as a rule, or preaching on that subject; but it was a matter that was talked of among the members and elders of the church, but was not a matter of public discussion or teaching from the platform or pulpit. I do not remember about there being a revelation that established it as a doctrine of the church up to that time. I do not recollect as to that, but I am not sure there was not one. The doctrines set forth in the Book of Doctrine and Covenants as a rule came by revelation through the President of the Church. Joseph Smith was President at that time. I said that as a rule revelations came through Joseph Smith; he was the President of the Church, but not necessarily, for they could come through the First Presidency, but they had to come through these mediums. Doctrines come now to the Reorganized Church in the same manner, through the Presidency of the Church. It is not enough now to have a revelation placed in the Book of Doctrine and Covenants to show that it came through the Presidency of the Church, nor was it enough in the original church. When a revelation is received by the President it must first be submitted to the First Presidency, and if approved by the First Presidency unanimously, it is then presented to the Quorum of Twelve, and if accepted and adopted unanimously by them, it is then presented to the Quorum of High Priests and then to the Quorum of the Bishops, and finally it is presented to all the quorums and members of the church present at a General Conference, and a final vote taken by the whole after it is decided on by one quorum after another from the Presidency down to the whole
521 body assembled together. I do not know of any revelations in the Book of Doctrine and Covenants, but what went through that course. I do not know of a revelation that came through Joseph Smith that is found in the Book of Doctrine and Covenants without it first passed all the quorums and the body of the people in the manner I have stated, from the First Presidency down to the body assembled in a General Conference. That course had to be pursued before they could become the law of the church. I mean that General Assembly, General Conference, or General Council; it makes no difference to me what you call it, but the church calls it a General Conference. They have always had the name of conference, a district conference, branch conference, or General Conference, they have always been called conferences. There has never been a General Assembly called in the Reorganized Church to my knowledge, but the authority is smuce to call one at any time, just the same as formerly. I do not
542 thell of any authority in the Book of Doctrine and Covenants of the declaremized Church, which they never used, if there is any I do not

know of it, any further than the calling of that assembly together, they have that authority, but have never used the authority. They have the authority, however, to do so when it is necessary.

522 Yes, sir, I spoke of the Temple plot, that is what I called it, but some people call it the Temple Lot. I simply meant this piece of land down here, that is sometimes called the Temple Lot, but I usually call it the Temple plot. When I speak of the Temple plot, I speak of it as meaning not only this piece of ground, but a good deal more, considerably more. I have one idea in my mind that it was fifty-seven (57) acres, and another idea that it was seventy-five (75) acres, or thereabouts, but I do not say that that is the number of acres, but that is the idea that is in my mind. That is the amount I think there was primarily; that is, in the first place. There was that much according to the best of my recollection, and the property now in con-
523 troversy forms a part of that. I do not remember of there being any prairie on it; I do not recollect of any if there was. If there was any prairie, it might have been at the extreme end of it, to which I might not, perhaps, have went at any time. I have been on the grounds several times, and could tell you some instances in relation to my being on it. I was on it a good many times, but I was always in the timber part of it, and if there was any prairie I do not know of it. I could locate the particular piece of property in controversy, and referred to in the revelation, which I have referred to, by the distance from the center of the village here. It was a village then, but it is now a city. It is about the right distance from the courthouse, or the center of the city, as well as I remember, and I used to travel down to it the time we resided here, and I have been down to it several times since, and the distance corresponds with my recollection of the distance. The distance seems to me to be about the same so far as I could see, to the place where they used to worship on the lot. It is true that as a man gets older distances do not appear as they did when they were younger, that may be the case, but my recollection of this is so distinct in regard to the distance
524 from the courthouse down to the Temple Lot, as being about the distance I then traveled, and now it appears to be the same, and I do not think I could be mistaken about that. There was a courthouse plot here then, and some kind of a place where they held court, but I do not remember what kind of a place it was. It was here in the center of the village. I do not think when we first began to go there that there was any road cleared to it, only as it was cut out. I myself in going there hardly ever went by the road, for I used to go across the field, and go up to where they held the meetings; afterwards there was a road cut through there to the Temple plot, and if my memory serves me right the Temple Lot was on the left hand side of the road as we went from here down to the Temple Lot or plot.

I know where the present building of the Reorganized Chu[illegible] Jesus Christ of Latter Day Saints is located; it is not now on [illegible] 542

called the Temple Lot, but it would not be a matter of surprise if it would prove to be on what in those days was known as the Temple Lot, the Temple plot primarily. It is on ground that I think primarily the Temple plot would embrace; yet it is possible that I may be mistaken in that impression. I think, however, that it is on what was primarily a part of the Temple ground.

I said in my examination in chief that the Whitmers were here in
525 1831, 1832, and 1833, and were members of the same church of which I was a member. I joined the church at this point; was baptized by Oliver Cowdery in 1831. I have seen the place since I have been here this time. "Uncle David Whitmer," as we used to call him, and John Whitmer and Mr. Phelps got into some trouble in the church; that is to say, they were appointed here in charge of the church in the West, at Far West, and their administration was so arbitrary that my father and some others entered complaint against them, and in view of this consideration it ultimately resulted in their being rejected from the church. That is the way they got out of the church; but all the particulars about it I cannot give you. I do not think that Oliver Cowdery was excluded from the church at that
526 time; if he was excluded at all, it was at a later date, and at a time about which I do not know anything.

I have no knowledge of the operations that occurred at Nauvoo, Illinois. I do not profess to know anything about the occurrences there at all. I knew Oliver Cowdery in Jackson county, Missouri, in 1831, 1832, and 1833, when I was residing here, he had the superintendency of the church here at Independence. I cannot say that I was personally acquainted with his wife, any more than to say I saw her several times, and knew her when I saw her. I was in his family enough to pass the time of the day, but as I was young I felt rather delicate about having any more to do with them than I had to. I did not have very much to do with them, only as I had business with them. I was ten in 1831, eleven in '32, and twelve in '33, that was when I was on this side of the river.

I knew Oliver Cowdery's family in Far West again; I knew them when they were in Caldwell county, but I do not know that I visited
527 them in Clay county. I have seen them in Far West; that was in 1836, '37, and '38. I do not recollect his special avocation of life there at Far West. I believe he was one of the Twelve in the church, and then he had the superintending care of the church, looking after it. The best of my recollection is that Oliver Cowdery's relation to the church was an apostolic relation. It has been in my mind always that Oliver Cowdery left Caldwell county in the spring of 1839. Some of my friends here have thought me in error in regard to that, but it is in my mind that he left in the spring of 1839. I left quite awhile after that; it was in 1842 that I left. It was as much as three or four months after; I was shot at Haun's Mill in the fall of 1838, that I saw Oliver Cowdery at Far West. I think it was
542 about three months, anyway, after that, that I saw him there. I saw him

after that in the State of Ohio; that was the next time I saw him, after the time I saw him at Far West, that was in the latter part of 1844. I saw him also in 1845 and in 1846. I never saw Nauvoo, only as I passed through it; in fact, I never passed through it; I passed by it on the river. I saw it in that way, but was never in it. I was on my way from Iowa to Ohio, at that time. Yes, sir, I said that the people at Far West, when they left there, went to Nauvoo, as a mass they went to Far West, and in the fall the most of them left, but they were going all through the winter, for they had three months to get away in, and some of them did not leave till along in 1839, but the mass of them went in 1838. The date of Governor Boggs' order for them to leave I do not recollect exactly; but it was sometime in November, if my memory serves me right. The church was not here in the State of Missouri, after it left for Far West I still belonged to the church in general, but I speak of it as it existed some place else. I had no particular place of fellowship, I stood alone, so to speak. After I went to Ohio, I had no fellowship with any body so far as religious matters were concerned, for there were no Latter Day Saints there, and I did not hear much of them only as I heard it through the papers. That condition continued for quite a while. I held meetings in the State of Ohio, independent of any religious organization, and got up quite an interest around me. The
529 United Brethren came there and organized a church of about one hundred (100), that were brought to be religious through me and my labors. I finally united with that church. I did not hold any office here in the church at Independence, any further than being a lay member, but at Far West, in 1837, I was set apart as an elder in the church; it was at a conference that was held at Haun's Mill, a district conference. That was done by the consent of the conference. There was a vote taken on it of the members present, in regard to my ordination as an elder, and it passed the conference, and I was ordained.

REDIRECT EXAMINATION.

537 When the members of the church were driven from Jackson county, and went across the river, they had to leave here without disposing of their property; so far as I know, they did not have time to make any disposition of it. I do not know that there was any opportunity for them to dispose of it, and so it was in Caldwell county, but no time was given them to get out of this county, Jackson county. I was asked yesterday on cross-examination something with reference to the name of the church, and with reference to that subject, Exhibit E, section 43, paragraphs 4 and 5, page 173, being portions of a revelation given in June, 1829, reads as follows: "Take upon you the name of Christ, and speak the truth in soberness, and as many as repent, and are baptized in my name, which is Jesus Christ, and endure to the end, the same shall be saved. Behold Jesus Christ is the name which is given of the Father, and there is none oth
name given whereby man can be saved: wherefore all men must t

upon them the name which is given of the Father, for in that name shall they be called at the last day: wherefore if they know not the name by which they are called, they cannot have place in the kingdom of my Father.

"And now behold, there are others who are called to declare my gospel, both unto Gentile and unto Jew: yea, even twelve: and the twelve shall be my disciples, and they shall take upon them my name: and the twelve are they who shall desire to take upon them my name, with full purpose of heart: and if they desire to take upon them my name, with full purpose of heart, they are called to go into all the world to preach my gospel unto every creature: and they are they who are ordained of me to baptize in my name, according to that which is written; and you have that which is written before you: wherefore you must perform it according to the words which
540 are written." And on the same subject, section 2, paragraph 7, page 79, commencing with the word *all*, reads as follows: "All those who humble themselves before God and desire to be baptized, and come forth with broken hearts and contrite spirits, and witness before the church that they have truly repented of all their sins and are willing to take upon them the name of Jesus Christ, having a determination to serve him to the end, and truly manifest by their works that they have received of the Spirit of Christ unto the remission of their sins, shall be received by baptism into his church."

I was asked on cross-examination about the ground here, known as the Temple plot, or Temple Lot. There was a small portion of it, that was consecrated or set apart for the purpose of building a temple on, sometime in the future, and that portion of it was the part that they occupied for religious worship from time to time. I did not see it consecrated or set apart, but I was present at the time
541 of the occupation thereof for religious worship a great many times, as the lot that was set apart and consecrated for the purpose of building the temple was used for religious worship, and I was present at religious worship a great many times. I have heard, I cannot say how many times, but more times than one, the announcement made from the stand when speaking there, that this lot was sacredly consecrated and dedicated by God for the building of his temple there. I have heard that several times. I have heard Oliver Cowdery make that statement, also heard Mr. Phelps make the same statement, and others in general conversation made the same statement. It was a matter of common notoriety that this piece of ground was set apart and solemnly dedicated for the purpose of the building of a temple at sometime in the future, and that temple was to be used for the purpose of worshiping in. When Oliver Cowdery and Mr. Phelps made these declarations, Edward Partridge was present. Edward Partridge himself stated publicly the same thing, that it was set apart and dedicated for a temple, for the worship of God. I have heard him state that publicly. These
542 declarations of Partridge were made right there on the ground

where the meetings were held. At the meetings would be the times that they would speak specially about it. They seemed to speak of it as being a sacred spot.

RECROSS-EXAMINATION.

These meetings I spoke of, at which these declarations were made were held there in the summer and fall of 1832, and the fore part of 1833, also where place of worship was, there were trees there, but where the meetinghouse of the Reorganized Church is now. I would not say whether there were trees there or not, I could not say at that time. The whole plot of ground in traveling over it at that time, I do not think any part of it could be called absolute prairie; there were places where there were not so many trees, but I do not think it could be called a prairie; it was what we would call a timber lot. I have it in my mind that there were about three acres set apart for the Temple Lot; I do not think there were more than that; I think they called it three acres. The boundaries were not so very well defined so far as corner posts were concerned, but they had it marked out so they knew where it was, but I do not know that there were any corners established, but there were about three acres set apart, or in the neighborhood of that amount. They claimed to own
544 the whole of it. The three acres were set apart for the Temple Lot, and the rest of it was for the purpose of settling Saints on it, for the homes of Saints ultimately, and they concluded to buy more lands than that, and settle homeless Saints on it. That was the idea of the church authorities at that time. During this time they were obtaining money more or less. They obtained some and with it bought some land. The church authorities bought some land with money obtained from the members of the church. I do not know how much, but I know they bought some land. Bishop Partridge was buying land for the church; he had the handling of church money, as the Bishop of the Church, or agent of the church. He was appointed by the President of the Church to do that; as the Bishop of the Church, and he was directed, amongst other things, to buy lands for homeless Saints. I did not see any articles, agreements, or anything of that kind, but I heard them talk about it, and I talked about it with Bishop Partridge, and I know my father gave him some money to buy land with,—to buy any land the Bishop
545 should choose to buy. I could not say how much he bought. I suppose he bought land elsewhere besides that. It appears to me that he entered the Temple Lot in his own name, but I would not say that was a fact; I think that was the way it was, but then it was understood by everybody that it was church property. I do not think he bought any land for himself as an individual, otherwise than I have stated. I do not know that he bought any for himself at all; I know that my father paid him money for that purpose. He would not buy land in his own name for the church unless there was some understanding with those who gave him authority, but he might do it in pursuance of an understanding he had with the authorities that

gave him the appointment to purchase these lands. I do not say that the land was bought in haste, they had to wait for information for the time being from the President of the Church, as to what should be done with it. He was living at that time at Kirtland, Ohio; in the meantime Partridge would take the title in his own name. I did not say that was the reason, the land may have been entered in his own name for the reason that at that time under the law a church could not enter it or take title, there was a good and valid reason for Bishop Partridge acting as he did, but I do not know what it was.

---

548 JOHN W. BBACKENBURY, of lawful age, being sworn on the part of the Plaintiff, testified in chief:—

Examination by Mr. Traber.

My name is John W. Brackenbury; I was born in 1829, on the 12th day of August, in the State of Ohio. I cannot say how long I lived in Ohio. I lived in Missouri; I think we came here in the spring of 1832. My mother came here then, and I with her, and I was here in 1833. I remember that; I was then three years old, in my fourth year I can remember of going to school. I lived here in Jackson county; my mother had ten acres of land up on the Big Blue; it must have been seven or eight miles from Independence; it was up in what was called Whitmer Settlement. I lived in Jackson county until November, 1833, when the Mormons were driven out. We went across the river at what is now called Wayne City; went over in the bottom and camped there by a big sycamore log, and staid
549 there all winter. I remember the circumstances under which my mother and the rest of the children left. I remember my mother taking three of us children, (she had four boys, but the oldest one was not at home,) I remember her taking us three to a man's house by the name of Mr. Joshua Lewis. That was about three hundred or four hundred yards from our house, from where we lived on the Blue.

My father died in New York before we came out here; I was about two years old; I do not remember him at all. We lived in Ohio, at the time of his death, but he died in New York; he was away from home. At the time I left Jackson county, I do not know the occasion of our having to leave; but I know this much, that one day while we were at Mr. Lewis's a man by the name of Philo Dibble came to the house; I remember him, because he lived just across the road from us. He came to the house, and I remember seeing him. He had been wounded; had his powder horn, and the bullet had went right through the powder horn, and the splinters were sticking in his side. He belonged to the church, the Latter Day Saints Church, and so did Mr. Lewis. I remember him looking so white, and they took him upstairs, and just before night he was brought down, or came down himself and went off, and then night came, and after
550 that, my mother took us out in the cornfield, and so did Mrs. Lewis

and her children, we staid in the cornfield all night, and in the morning when we came back to the house I remember that the house was torn down to the eaves, and the rafters were all off of it, and I remember going into the house, and there was a table sitting in the middle of the room, and a big large pan of honey sitting on it. Then they took us away from there off into the woods to a schoolhouse, and there were the women, children, and an old man there, but I do not remember the old man's name. We staid there all day, the women, children, and the old man were there all day, crying, and in great distress. From that time I do not remember anything until we got to the river. I remember seeing and crossing it and going over in the bottom and camping by a big log; from there we moved over to Arthur's Mill, about three miles from Liberty. I have no recollection how many people there were there at the time. We were then in Clay county, about three miles from Liberty, on a creek called Shoal Creek. We staid there over a year, I think; went from there to Far West; we remained at Far West until the trouble came up again. I remember something about that trouble.

551 I am not positive about the year that we went there, but I remember positively about the year we left there. I was pretty young when we went there, but I was older when we left; we left there in 1838, and went over to Quincy, Illinois. We left, I think, in the latter part of November, 1838; it was pretty cold weather; I know it snowed and rained, and we camped in the mud. We got to Quincy, in 1838, and went from there up to Nauvoo, in 1839. We got to Quincy late in the fall of 1838; staid there that winter until in the spring of 1839, then we moved up to Nauvoo, and we staid there until the time Brigham Young started for the West, and we went with him as far as the Missouri River; there we saw so much of their manner of doing business, that we went back to Quincy.

I remember about the Temple at Nauvoo; it was never finally completed. I was at Nauvoo from the time I first went there, in the spring of 1839, until sometime in 1846, we left at the time of the hegira from Nauvoo. I was there once since that time. I forget whether it was in 1849 or 1850. No, sir, the temple was not finished, and when I went back there that time the temple was torn down. When I was there in 1846, it was not finished. I know that because I have been in it and over it from top to bottom many a time, and when we left there in 1846, it was not finished, and the next time I was back there after that, it had been burned down; struck by lightning, they said, and burned down. The last time I saw it when it was not completed, and before it was burnt down, was in 1846.

RECROSS-EXAMINATION.

552 E. L. KELLEY, being sworn on the part of the Plaintiff, testified as follows:—

Before asking Mr. Kelley any questions, we desire to offer in evi-

dence a certified copy of a warranty deed made by Jones H. Flournoy, and Clara Flournoy his wife to Edward Partridge, dated the 19th day of December, 1831, acknowledged on the 19th day of December, 1831, and recorded in Book B, page 1, of the records for deed of Jackson county, Missouri, filed for record on the 19th day of December, 1831, and recorded on the 24th day of May, 1832, conveying land, of which the property in question in this suit is a part. Before formally offering this deed in evidence, I desire to ask Mr. Kelley, the Bishop of the Reorganized Church of Jesus Christ of Latter Day Saints, some questions.

I hold the position of Bishop in the Reorganized Church of Jesus Christ of Latter Day Saints, by virtue of an election to the position which I now hold by the society, and ordination to the office of Bishop in the regular way. The duties pertaining to that office is to look after the temporalities of the church, its properties and the support of its ministry and the poor of the church. My headquarters are at Lamoni, Iowa; my jurisdiction, with reference to the care of the properties of the church, is wherever the church has property or properties in all the States. I mean by that all the United States, or wherever we have property in all the world, everywhere and anywhere the church owns property. Yes, sir, its character is real estate and personal property. Real estate and also personal property is held by virtue of or under their articles of incorporation, the deeds usually run directly to the corporation; that is, the name of the society. There are certain States requiring trustees where the deeds run to the Bishop as the trustee, and others where it requires local trustees; local trustees are mentioned in connection with the Bishop. Where the property is not held directly in the name of the church, it is held in the name of a person or persons as trustees. The Bishop is the one that properly holds it as trustee. The title to all the property of the Plaintiff church is vested either in the church directly as a corporate body, or in the Bishop or his counselors as trustees, with the exception of a few cases that I have stated; a few church buildings that are held in some of the States under the
553 law which requires local trustees. Property in the State of Missouri, is held by the church in its corporate name. All that I remember of at the present time is so held. There may be a few pieces of property that are not in the name of the church but the Bishop, but I do not recall any such instances now.

Yes, sir, we claim title to the property in question in this suit. The title to the property in question in this suit is held by deeds conveying it to the church in its corporate name; Bishop Blakeslee was the Bishop at the time of the conveyance, but I think the name of the Bishop is not used; I am not certain, but if I am in error I can quickly rectify it, for I have the original deed in my pocket. Yes, sir, I have the original deed. I heard you describe the deed which you propose to offer in evidence in this case, yes, sir. I have not in my possession or under my control and have never had, nor has

the church ever had, of which I am the Bishop, the original deed of which that purports to be a copy; it is not in my power, or under my control in any way, or under the power or control of the complainant in this case to my knowledge. I will now state that as Bishop and trustee I hold all the deeds belonging to the society, and all legal papers of every description, and it is not amongst them, and never has been to my knowledge. The deed above referred to, offered in evidence, and marked Exhibit 20, is in words and figures as follows:—

EXHIBIT 20.

To all people to whom these presents shall come, Greeting.

Know ye that we, Jones H. Flournoy and Clara Flournoy, wife of the said Jones, of the county of Jackson, and State of Missouri, for the consideration of one hundred and thirty dollars, received to our full satisfaction, of Edward Partridge of the county and State aforesaid, do give, grant, bargain, sell, and confirm unto the said Edward Partridge, the following described piece or parcel of land: being a part of the southeast Quarter of Section three in township number forty-nine of range number thirty-five in the aforesaid county, bounded and described as follows, to wit: Commencing on the south line of said quarter section forty poles from the southeast corner of said quarter section, at the corner of a certain piece of land sold by said Flournoy and wife to one Lewis Jones, and from thence running west one hundred and twenty poles to the southwest corner of said quarter section. Thence north sixteen poles and ten links, thence north forty degrees east, ten poles, thence north twenty-one degrees east, fourteen poles, thence north fifteen degrees east, twenty poles, thence north forty-two degrees east, thirty-four poles, thence north fifty-five degrees east, thirty poles, thence north sixty-four degrees east, forty poles, thence north seventy degrees east, seventeen poles and fifteen links to the corner of a certain tract of land sold by the said Flournoy and wife to one G. M. Hensley, south one hundred and twenty-two poles and seventeen links to the place of beginning containing sixty-three acres and forty-three one hundred and sixtieths of an acre, be the same more or less. To have and to hold the above granted and bargained premises, with all and singular the rights and privileges thereunto in any wise belonging and appertaining unto him the said Edward Partridge, his heirs and assigns for ever, to his and their own proper use and behoof. And also we the said Jones H. Flournoy and Clara Flournoy, wife of the said Jones, as aforesaid, for ourselves, our heirs, and assigns, that at and until the ensealing of these presents we are well seized of the premises as a good indefeasible, and have good right to bargain and sell the same in manner and form as it is above written and that the same is free from all incumbrances whatsoever. And further more we the said Jones H. Flournoy and Clara Flournoy, wife of the said Jones, as aforesaid, do by these presents bind ourselves, our heirs and assigns, forever, to warrant and defend the above granted and bargained premises to him, the said Edward Partridge his heirs, and assigns, against all lawful claims and demands whatsoever.

In witness whereof we have hereunto set our hands and affixed our seals the nineteenth day of December in the year of our Lord, eighteen hundred and thirty-two.

JONES H. FLOURNOY. Seal.
CLARA FLOURNOY. Seal.

STATE OF MISSOURI, } ss.
County of Jackson. }

554 Be it remembered that on this nineteenth day of December in the year of our Lord one thousand eight hundred and thirty-one before the undersigned deputy for Samuel C. Owens, Clerk of the Circuit Court for the aforesaid county, personally came Jones H. Flournoy and Clara Flournoy, both personally known to the said undersigned, to be the persons whose names are subscribed to the forego-

ng instrument of writing as having executed the same and acknowledged said instrument of writing to be their act and deed for the purposes therein mentioned, she, the said Clara Flournoy, being by me first made acquainted with the contents thereof and examined separately and apart from her husband, whether she executed such deed and relinquished her dower in the lands and tenements in said deed mentioned, freely, voluntarily, and without compulsion or undue influence of her said husband, acknowledged and declared that she executed said deed and relinquishes her dower in the lands and tenements in said deed mentioned, freely, voluntarily, and without compulsion or undue influence of her said husband.

Taken and certified under my hand and the private seal of Samuel C. Owens, Clerk of the said Circuit Court, there being no official seal at said office the day and the year above written.

RUSSELL HICKS,
Deputy for Samuel C. Owens, Clerk C. C. J. C.

[SEAL]

STATE OF MISSOURI, } Sct.
County of Jackson. }

I, Samuel C. Owens, Clerk of the Circuit Court, and *ex officio* recorder within and for the aforesaid county, do hereby certify that the foregoing deed of bargain and sale from Flournoy to Partridge, was filed in my office for record on the 19th day of December, 1831, and duly recorded in my office on the 24th day of May, 1832, in Book B, page 1.

SAMUEL C. OWENS, Clerk.

STATE OF MISSOURI, } ss.
County of Jackson. }

555 I, R. T. Hinde, Recorder of Deeds, within and for said county of Jackson and State of Missouri, do hereby certify that the foregoing is a full, true, and complete transcript of the record of the W. D.———Acknowledgement———and note of record thereon indorsed from Jones H. Flournoy and wife to Edward Partridge, as the same now remains of record in my office in Independence, Missouri,——— Book No. B, at page 1, and following.

In testimony whereof, I have hereunto set my hand, and affixed the seal of said office, at my office in the city of Independence, in said county, this 11th day of June, A. D. 1887.

R. T. HINDE, Recorder,
By W. R. HALL, Deputy.

CROSS-EXAMINATION.

556 Yes, sir, I testified that I was Bishop of the Church; I am Bishop of the Reorganized Church of Jesus Christ of Latter Day Saints; that is the name of the church of which I am the Bishop. I am the Bishop of the church of that name, and the church has been incorporated under the laws of the State of Iowa.

Q.—Are you Bishop of a corporation; yes or no will answer that question?

A.—I am Bishop of the Church.

Q.—I would like you to answer the question as to whether you are the Bishop of a corporation?

A.—I have answered the question; I simply state the facts to you, and you can draw your own conclusion.

Q.—So you want the Notary there to note that you refuse to answer, Yes, or No, to the question I have asked you. Is that the way you want your answer to be recorded?

A.—I want my answer to be recorded that I state the facts, but I
557 am not here to give my conclusions as I understand it.

Q.—Well, I must again request you to answer the question as to whether or not you are the Bishop of a corporation entitled "The Reorganized Church of Jesus Christ of Latter Day Saints." Now you either are or are not, and I ask for an answer to that question. What is your answer to that question?

A.—I am willing to answer just what I am. I am willing to answer any question you may put to me, by giving you the facts in connection with the question if it is in my power to do so.

Q.—Well, I have asked you that question, and I want you to answer it.

A.—My position is that of Presiding Bishop of "The Reorganized Church of Jesus Christ of Latter Day Saints," and the Church as a society was incorporated after I became its Presiding Bishop, in this manner, under the operation of the laws of the State of Iowa.

Q.—I repeat the question, are you the Bishop of a corporation?

A.—I am Bishop of the Church, and the Church is duly incorporated under the laws of Iowa, and if that makes me the Bishop of a corporation, then I am the Bishop of a corporation, and if it does not, then I am not the Bishop of a corporation. I do the business for the church and the church is incorporated, and as such you might call me the agent of the incorporation.

Yes, sir, the church has the necessary officers provided for in its articles of incorporation, the church officers are its officers, and no others. The officers are those that are mentioned in the articles of incorporation, and provided for by the laws and regulations of the church which is incorporated.

The corporation does not have directors and officers outside the church officers, it has those specified in the articles of incorporation, in so far as it is stated in the articles of incorporation, the officers that are therein specified are entitled to do the business.

558 This paper, Exhibit 20, purporting to be a certified copy of a deed came into my possession I think it was the same day that it was made here in Independence, the 11th day of June, 1887, and has been in my possession ever since. I was then acting agent for the church in a different capacity, however, but I came into the possession of the paper at that time, and have retained its custody ever since. At that time I was not the Bishop of the Church. Local organizations like the one here at Independence, Missouri, are sometimes called local churches, and sometimes they are called branches of the church. I could not tell you how many branches there are of my own knowledge without referring to the records.

I know about how many there are generally; there are about four hundred in the United States. I could give an approximate idea of about how many there were in the world; I think in the Canadas there are about twenty or twenty-five, but I do not know with reference to Australia, or the Society or Sandwich Islands, or Europe either. Personally I am not in a position to tell you the number with any degree of accuracy.

The property of the local branches of the church in Canada is held in part by local trustees, and my instruction has been to the officers there in deeding property to have it deeded directly to the church in its corporate name, as we claim we could and can so hold it by the recognized laws of comity between the two countries in its corporate name.

I would not say for certain that the property here in Independence is in the name of the Bishop; I know that it is not in my name, but it may be in the name of the former Bishop of the Church, for at the time it was deeded G. A. Blakeslee, of Galien, Michigan, was the Bishop, and it is possible that it is in his name, but I think it was in the name of the Reorganized Church of Jesus Christ of Latter Day Saints. If you wish to know definitely you can ascertain the fact by examining the records.

The titles to a number of the local churches run to Israel L.
559 Rogers, as the trustee and Bishop, when he was the Bishop of the church. That was before the society was ever incorporated and after the appointment of Bishop Blakeslee, some of the deeds run to him as Bishop and trustee, and some were directed to the church in its corporate name, and so it has been since my appointment. There is none lega y held in any other way at all, not that I know of.

There are special regulations with reference to property of these branches of the church. It is held for the use and benefit of the society, so long as the society holds together. I mean by that the local society, and so long as it is in harmony with the laws of the church. If it should happen that the local society for any reason should depart from the church, the general society would not lose its interest in the property. All this property is brought together, and obtained by the use of the money of the church, and this is where the interest of the general church comes in.

Yes, sir, the general church has an interest in the property of a local branch besides the benefit for the local branch itself. Often the general church aids these societies in building, loans them money, and aids them in various ways. It is owing in a great measure to the conditions, whether the loan made to the local churches by the general church is to be repaid. Title to church property is held by the Bishop for the use and benefit of the general church, that is such property as is deeded to the Bishop in trust.

Yes, sir, there is a law of the church giving the Bishop power to sell property; the law is simply what you find in the articles of incorporation already introduced in evidence in this case.

560 Yes, sir, speaking of the General Conference as the church generally, it does hold property generally; that is, in the sense of holding property other than church buildings. Yes, sir, they hold real estate and personal property too. It holds it for the use and benefit of the church generally. The general church has church buildings. The building at Kirtland, Ohio, the temple building there at Kirtland, Ohio, is held by the general church, and it is the best and

most costly building held by the society. It has other real estate and personal property.

561 It has one hundred and sixty acres of land in Missouri. It holds the Temple Lot in question in this case, and several other lots here in Independence. Holds one lot just north of the Temple Lot, here in question in Independence, and in a good many other places it holds property. It holds a block in the center of San Bernardino, California, and it holds two lots in Pomona, California. It holds all of it for the use and benefit of the Reorganized Church of Jesus Christ of Latter Day Saints, and it is so stated in the deeds. The church holds property for any and every purpose or use the society may see fit to put it to.

Yes, sir, but it is not expected that the church would go into speculation, and if the Bishop would go into that kind of business he would be dismissed, for he is not permitted to go into the speculative business. Whatever the Bishop does with any of this property is approved by the incorporation. The way the corporation approves, is by or through the church which is incorporated. The action of the Bishop in any of these matters is not as a matter of course approved of; they are liable to be inquired into at any time, for committees are appointed to examine my books and accounts, papers, and reports, and I report all the real and personal property at each Annual Conference of the society.

562 I make my report to the church. I report to this incorporation at Lamoni, yes, sir, for it is the church at Lamoni. The church at Lamoni is the incorporation, and it was duly incorporated by the laws of Iowa, and as such an incorporation I report to it by reporting to the church. The church at Lamoni is the principal church in this incorporation, but this incorporation is not the church at Lamoni alone, for it includes in the society other branches of the church at other places, and as the officer having charge of these things I report to the general association of the church. I reported this present month at the General Conference that was held here at Independence, Missouri.

I am acting here in this case as a representative of the church which incorporated. Both the church and the incorporation are one and is the same thing, if you want to make a distinction you can do so, but I state to you the fact, the laws of Iowa, as I understand them make no distinction. In my proceedings here at this conference, and the capacity in which I appeared, I represented the incorporation or the church. The muniments of title to the property of the church are in my possession as an officer of the corporation.

I again answer that I am the Bishop of the Reorganized Church of Jesus Christ of Latter Day Saints, which is incorporated under the laws of Iowa, and if that makes me an officer of a corporation I am one. I believe we observe the laws under which the church is incorporated. I have told you what we do, and it is for the Court to decide that question.

The incorporation was not effected at the time I came into possesion of Exhibit 20; at that time the society was incorporated under and by virtue of the laws of the State of Illinois. . I have not transferred the possession of this deed, Exhibit 20, to the possession of this incorporation at Lamoni, for the reason that the incorporation was transferred to Iowa; the reincorporation transferred me from the incorporation in Illinois to the corporation in Iowa, and I took this deed with me as a matter of course.

563 I was one of the parties incorporating at Lamoni, and we reincorporated the society, and the effects belonging to the original incorporation, by that act of reincorporation were duly made the effects of the incorporation at Lamoni. There was no act of mine transferring to the incorporation at Lamoni, any paper, or muniments of title to real estate, or otherwise except as I have stated, and it was not necessary so to do under the laws of the State of Iowa. So far as the taking the property out of the one hand and putting it in another, so to speak, that was never done.

The Bishop is the treasurer of the incorporation, he is the treasurer of the church, and as such he is the treasurer of the incorporation. It has no secretary except the Secretary of the Church. The church has a secretary and as the church is incorporated, he is of necessity the secretary of the incorporation.

RE-EXAMINATION.

There is no person connected with the church or incorporation of which I have spoken aside from myself who would be entitled to the custody of the deed offered in evidence, marked Exhibit 20.

W. R. HALL, of lawful age, being produced, sworn, and examined on the part of the Plaintiff, testified as follows:—

564 My name is W. R. Hall; I am Deputy Recorder of Deeds, in Independence, Missouri, at Jackson county.

Exhibit 20 now handed me is a certified copy of the record of a deed from Jones H. Flournoy and wife to Edward Partridge, and conveys the southeast quarter of section three, township forty-nine, range thirty-two; bounded and described as follows:—

"Commencing on the south line of said quarter section forty poles from the southeast corner of said quarter section at the corner of a certain piece of land sold by said Flournoy and wife to one Lewis Jones, and from thence running west one hundred and twenty poles to the southwest corner of said quarter section; thence north sixteen poles and ten links, thence north forty degrees east, ten poles; thence north twenty-one degrees east, fourteen poles, thence north fifteen degrees, east twenty poles, thence north forty-two degrees east, thirty-four poles; thence north fifty-five degrees east, thirty poles; thence north sixty-four degrees east, forty poles; thence north seventy degrees east, seventeen poles and fifteen links to the corner of a certain tract of land sold by said Flournoy and wife to

one G. M. Hensley; and from thence due south one hundred and twenty-two poles and seventeen links to the place of beginning, containing sixty-three acres and forty-three one hundred and sixtieths of an acre, be the same more or less."

It is dated the 19th day of December, 1831. It was acknowledged on the same day, was recorded in Book B, page 1, and following pages. I made the certified copy, and that is my name signed to it, as Deputy Recorder.

CROSS-EXAMINATION.

I am twenty-four years old; it was sometime in 1886 that I was appointed Deputy Recorder; prior to that time I was a clerk in the office, about six months.

W. R. HALL, being recalled for the Plaintiff, testified as follows:—

565 I am the same party who was on the witness stand a few minutes ago. I testified then that I was Deputy Recorder, of this county, here at Independence, Missouri, I am now the Deputy Recorder.

I have here now while my deposition is being taken, Book 146 of the Jackson county, Records of Deeds. On page 139 of that record is a quitclaim deed from Elizabeth Ann Cowdery, widow of Oliver Cowdery deceased, to Marie Louise Johnson, and it is dated the 29th day of May, 1886, recorded in Book 146, at page 139. It is signed Elizabeth Ann (her mark) Cowdery, and attested by D. Havens and H. Howard. It was acknowledged before D. Havens, Notary Public, on the 29th day of May, 1886; recorded the 22d day of June, 1886. I have made an examination of the Recorder's office of this county for the original of the deed to which my attention has been called to-day, and I have not found it.

CROSS-EXAMINATION.

It was delivered to the Kansas City office. Yes, sir, I give the same testimony now with reference to my connection with the Recorder's office and previous occupations as I did when giving my prior testimony, when the instrument from Flournoy and wife to Partridge was offered in evidence.

RE-EXAMINATION.

Plaintiff's counsel now offers this record marked Exhibit 21 in evidence. Let the record show here, that in lieu of the copy of the deed that has been read being offered in evidence, Plaintiff's counsel now asks the Deputy Recorder of Deeds from Jackson county, Missouri, to make a duly certified copy of the record in question and present it here to-morrow morning.

Witness: I will make the certified copy and present it, as requested. Exhibit 21 is a certified copy of the record deeds of Jackson county. I made that certified copy myself; it is a deed from Edward Partridge to Jane Cowdery and others. It was acknowledged on the 25th day of March, 1839, and recorded on the 7th day of February, 1870; the date of certifying the copy is June 11, 1887.

Q.—I now offer this deed in evidence, Exhibit 21, and will follow up the offer by showing that the Plaintiff in this case has not the control or possession of the original.

RECROSS-EXAMINATION.

566 Yes, sir, there is a date to the deed; 25th of March, 1839, I call the date. Yes, sir, there is something there to show that the party taking the acknowledgement was an officer. He states that he was Justice of the County Court. I said in testimony here that that is a deed, and I have certified that it is a deed; that is, I have certified that it is a copy of the record of that deed from Edward Partridge to Jane Cowdery and others. I make that certification. This deed is a certified copy of that which is marked Exhibit 21, is recorded in Book 73, page 432, and following. The date of recording is the 7th of February, 1870. The certified copy of the deed from Edward Partridge to Jane Cowdery and others, which is marked Exhibit 21, is offered in evidence; first, for the purpose of showing a conveyance of the legal title of the property; and secondly, for the purpose of showing the children of Oliver Cowdery and their names, so far as the deed itself shows their ages.

---

567 E. L. KELLEY, resuming the witness stand, testified as follows, for the Plaintiff:—

I am the same E. L. Kelley who was on the witness stand before this afternoon, and was examined by Judge Traber.

Q.—With reference to that examination, and this Exhibit 21, I will ask you if your answers to questions I might put to you, with reference to your position with the Plaintiff church would be the same as you have heretofore given?

A.—They would be the same. Exhibit 21 now handed me is a certified copy of the record of a deed conveying property in Jackson county, Missouri, made by Edward Partridge, to Jane Cowdery and others. I have not in my possession, custody, or under my control; nor has the Plaintiff church in its possession, custody, or under its control the original deed of which Exhibit 21 purports to be a copy. Never had it in my possession as Bishop of the Plaintiff church, or otherwise. I do not know where the original deed is, nor in whose hands it is; it was never in the possession of the Plaintiffs to my knowledge. I had the Recorder of Jackson county examine his office for the original as early as 1877, and he stated to me that he could not find it; nor did the records show who took the deed from his office,—that is, the original deed from his office.

CROSS-EXAMINATION.

568 I never saw the original deed; I never knew of anyone who had it in their possession; never knew of anyone who claimed to have it in their possession. It was never in the possession of the Reorganized Church of Jesus Christ of Latter Day Saints to my knowledge. Yes sir, I have made diligent search to ascertain these facts. I do not

know a thing in the world about its whereabouts, or whose possession it is in.

Plaintiff's counsel now offers the deed marked Exhibit 21 for the further purpose of showing that the property therein described and referred to was the property held in trust by Edward Partridge for the use and benefit of the church, and also for the purpose of notice of such trust upon the records of Jackson county, the 7th day of February, 1870, which is the date of the record of the deed. Exhibit 21, offered above, is in words and figures as follows; to wit:—

EXHIBIT 21.

DEED.

EDWARD PARTRIDGE,
To
JANE COWDERY, *et al.*

KNOW ALL MEN, that whereas there was money put in my hands, to wit,—in the hands of Edward Partridge, by Oliver Cowdery, an elder in the Church of Latter Day Saints, formerly of Kirtland, State of Ohio, for the purpose of entering lands in the State of Missouri, in the name of, and for the benefit of said church; and, Whereas, I, Edward Partridge was Bishop of, and in said church he took said money and funds thus put in his hands and entered the land in his own name, in the county of Jackson, State of Missouri, in the name of Edward Partridge, the signer of this deed,

Now know ye that for the furthering the ends of justice, and as I have to leave the State of Missouri, by order of Governor Boggs, and with me also our church, I do for the sum of one thousand dollars, to me in hand paid by said Oliver Cowdery, do give, grant, bargain, and sell to John Cowdery, son of Oliver Cowdery, now seven years old; and Jane Cowdery three years, and Joseph Smith Cowdery one year old, all the lands entered in my name in the county of Jackson, in the district of Lexington, in the State of Missouri. Said Edward Partridge the first party and signer of this deed does also sell, alien, and confirm to the aforesaid John Cowdery all real estate and lands he has both entered as aforesaid, and all he owns in his own name by private purchase and holds by deed of gift, being intended for the use of the Church of Latter Day Saints or otherwise. This sale is to embrace all lots of all sizes, situated in Independence, and to embrace the lot known as the Temple Lot, and all other lands of whatever description said Partridge the first party is entitled to in said Jackson county, in the State of Missouri. Said Partridge also agrees to amend this deed to said Oliver Cowdery at any time for the purposes aforesaid.

Given under my hand and seal on the date above written.

E. G. GATES, Witness. EDWARD PARTRIDGE. [Seal.]

STATE OF MISSOURI, } ss.
569 Caldwell County. }

Be it remembered, that on the 25th day of March, 1839, before me, the undersigned, one of the Justices of the County court in and for said County, came Edward Partridge, who is personally known to me to be the same person whose name is subscribed to the foregoing instrument of writing as party thereto, and did acknowledge the same to be his act and deed for the purposes therein mentioned.

In testimony whereof I have hereunto set my hand and affixed my private seal on the day and year above written.

ELIAS HIGBEE, J. C. C. C.

The foregoing deed with the acknowledgment thereon from Edward Partridge to Jane Cowdery, *et al.*, was filed and duly recorded in my office on the 7th day of February, A. D. 1870.

A. CUMINGO, Recorder,
By H. G. GOODMAN, Deputy.

STATE OF MISSOURI, } ss.
County of Jackson.

I, R. T. Hinde, Recorder of Deeds within and for said County of Jackson, and State of Missouri, do hereby certify that the foregoing is a full, true, and complete transcript of the record of the Deed —— acknowledgment —— and note of record thereon endorsed from Edward Partridge to Jane Cowdery *et al.*, as the same now remains of record in my office in Independence, Book No. 73, page 432, and following.

In testimony whereof, I have hereunto set my hand and affixed the seal of said office in the city of Independence, in said County, this 11th day of June, A. D. 1887.

R. T. HINDE, Recorder,
[SEAL.] By W. R. HALL, Deputy.

570 Plaintiff now offers in evidence a quitclaim deed dated the 9th day of June, 1887, executed by Marie Louise Johnson, and Charles Johnson, her husband, to George A. Blakeslee, Bishop and Trustee in trust of the Reorganized Church of Jesus Christ of Latter Day Saints, of the county of Berrien, in the State of Michigan, for the use and benefit of the same, and describing lots 15, 16, 17, 18, 19, 20, 21, and 22, all of the Woodson and Maxwell's addition to the city of Independence, Missouri; acknowledged on the 9th day of June, 1887, before D. E. Havens, Notary Public, in the county of McDonald, in the State of Missouri, filed for record the 10th day of June, 1887, at 10:10 o'clock a. m., and recorded in the Recorder's office of Jackson county, Missouri, the 10th day of June, 1887, in Book 146, page 544. The paper offered in evidence above is marked Exhibit 22, and is in words and figures, as follows:—

This indenture made on the 9th day of June, A. D. one thousand eight hundred and eighty-seven (1887), by and between Marie Louise Johnson, only surviving child of Oliver Cowdery, and Dr. Charles Johnson, her husband, of the town of Southwest City, and State of Missouri, parties of the first part, and George A. Blakeslee, Bishop and Trustee in Trust of the Reorganized Church of Jesus Christ of Latter Day Saints, of the County of Berrien, and State of Michigan, party of the second part,

Witnesseth, that the said parties of the first part, in consideration of the sum of one hundred dollars ($100), to them paid by the said party of the second part, the receipt of which is hereby acknowledged, do by these presents remise, release, and forever quitclaim unto the said party of the second part, the following described lots, tracts, or parcels of land lying, being, and situate, in the county of Jackson, and State of Missouri, to wit:—

The premises known as the "Temple Lot," in the city of Independence, in said county; the same being also platted and described as lots, 15, 16, 17, 18, 19, 20, 21, and 22, all of Woodson and Maxwell's Addition to the city of Independence, Missouri. *Habendum* to George A. Blakeslee, Trustee in Trust, the said premises being for the use and benefit of said church according to the laws and usages of the same, said premises containing about two acres and one half, more or less.

This deed of quitclaim being made in release of, and satisfaction for, the Temple Lot, included in other descriptions in a certain deed dated the 29th day of May, 1886; recorded in the Recorder's Office within and for the county of Jackson, in Deed Book 146, at page 139.

To have and to hold the same with all the rights, immunities, privileges, and appurtenances thereto belonging unto the said party of the second part, and his successors in office and assigns forever; so that neither the said parties of the first part, nor their heirs, nor any other person or persons for them, or in their name or behalf, shall or will hereafter claim or demand any right or title to the afore-

said premises, or any part thereof; but they, and every one of them shall by these presents, be excluded and forever barred.

In witness whereof the said parties of the first part, have hereunto set their hands and seals the day and year first above written.

Signed, sealed, and delivered in the presence of E. L. Kelley.

MARIE LOUISE JOHNSON. [Seal.]
CHARLES JOHNSON. [Seal.]

STATE OF MISSOURI, } ss.
County of McDonald. }

Be it remembered that on this 9th day of June, 1887, before me personally appeared Marie Louise Johnson and Charles Johnson, her husband, to me known to be the persons in and who executed the foregoing instrument, and acknowledged that they executed the same as their free act and deed. In testimony whereof I have hereunto set my hand and affixed my official seal at office in South West City, the day and year first above written.

My term as Notary expires March 21, 1888.

[SEAL.] D. E. HAVENS, Notary Public.

STATE OF MISSOURI, } ss.
County of Jackson. }

IN THE RECORDER'S OFFICE.

I, R. T. Hinde, Clerk of the Circuit Court, and *ex officio* Recorder of said county, do hereby certify that the within instrument of writing was, on the 10th day of June, A. D. 1887, duly filed for record in this office, and is recorded in the records of this office, in Book 146, at page 544.

In witness whereof I have hereunto set my hand and affixed the seal of said Court at Independence, Missouri, this 10th day of June, A. D. 1887.

R. T. HINDE, Recorder,
[SEAL.] Per W. R. HALL, Deputy.

On the back of said Exhibit 22, appears the following indorsement, to wit:—

No. 14. Quitclaim Deed, from Marie Louise Johnson *et al.*, to Geo. A. Blakeslee, trustee of L. D. S. Filed for record this 10th day of June, 1887, at 10 o'clock and 10 minutes a. m.

R. T. Hinde, Recorder, by E. T. Packard, Deputy, 146, 544. Recorder's fee 75 cents paid. Trans. 80. Mail Geo. A. Blakeslee, Galien, Michigan.

W. R. HALL being recalled on behalf of the Plaintiff, testified as follows:—

572 I am the same W. R. Hall who was on the witness stand yesterday afternoon, and who testified that I was the Deputy Recorder here at Independence, Missouri. The paper marked Exhibit 23, now handed me, is a correct copy of the original record of a deed from Elizabeth Ann Cowdery to Marie Louise Johnson, made on the 29th day of May, 1886. It has our certificate on it to that effect. We certify that it is a correct copy of the record of the deed referred to. You see we say "We do hereby certify that the foregoing is a full, true, and complete transcript of record of the Quitclaim Deed," etc. That is a transcript of the identical page of the Record on page 146 that I identified here in court yesterday, when I was on the witness stand, and read.

Plaintiff now offers in evidence a certified copy of the deed from Elizabeth Ann Cowdery to Marie Louise Johnson, marked Exhibit 23. Yes, sir, I stated yesterday on my cross-examination that I had

been connected with the Recorder's Office since about the first of 1887, as the Deputy Recorder at Independence, Missouri. As such Deputy Recorder I have had charge of the books of the office, the books containing the records of deeds filed during all of that time. The Recorder is in Kansas City. Prior to June first of this year, he lived here, he lives here now, but he stays at the Kansas City office every day.

CROSS-EXAMINATION.

Mr. Hinde the Recorder comes down to this office occasionally. He is here about one day out of every week.

---

573 E. L. KELLEY, being recalled on the part of the Plaintiff, testified as follows:—

Prior to the time I was appointed Bishop of the Reorganized Church of Jesus Christ of Latter Day Saints, George A. Blakeslee, of Galien, Michigan, was the Bishop. He is not living now. He died on the 20th day of September, 1890. He was the Bishop of the church up to the time of his death. I acted as the Bishop of the Church from the time of the death of Bishop Blakeslee, until the time of my appointment, by virtue of being Counselor to the Bishop prior to his death, the incorporation providing that the counselors shall hold their office as trustees upon the death of the Bishop until the new Bishop is elected and qualified, and in that connection I will state that I held the office also by virtue of an appointment by the Presidency of the Church. The appointment is in writing, and you can call for it if you would like to examine it.

Q.—I will ask you what you have done either as the Bishop of the Church, or as an agent of the church, in trying to secure the possession of the property in controversy in this case, or in the way of exercising or attempting to exercise any acts of ownership over the same for, or in behalf of the church. State fully all you have done in that connection, and if any reference is made to any papers of any kind, you may produce the papers and have them identified as a part of your answer to this question.

A.—Well, acting for the society or for the church, I served notice on the party who claimed to be the trustee of the church here, Mr.
574 Hill,—I believe it was in 1887, that notice was served upon him. The notice was served upon him by reading it to him, and by giving him a copy, and I have also paid taxes upon the property myself since I have been Bishop. The paper handed me is the original notice that was served upon Mr. Hill, a copy of that being given him. The paper is marked Exhibit 24. Yes, sir, I have in my possession a receipt for taxes paid on the 2d day of January, 1891. "Received from the Reorganized Church of Latter Day Saints by E. L. Kelley, as trustee, in full for taxes on real estate for the year 1890, described as follows: Lots 17 to 22, all E. Grand Avenue, Lot 23, Woodson and Maxwell's Addition, thirty-one dollars and twenty-two cents ($31.22). Signed, Frank C. Wyatt, by Jno. H. Modie, Deputy."

CROSS-EXAMINATION.

I have no receipts for money paid for any other taxes on this property, that I remember of. I called at the Collector's office once or twice to do so, but some one else had paid them. I suppose the taxes have been paid on this property for a good many years, but I do not know anything about it. We did not pay these taxes for the purposes of this suit. We claim this property now, and we claimed it then, and wanted to pay the taxes on property that we considered was our property. We paid them when they were due and we knew
575 it. We did not find them due, but in one or two instances. The taxes I paid were the county taxes. At the time I paid I thought I paid the city tax, except the sidewalk tax, and I thought I had the receipt for it, but I see it is not in my pocket. I never attended to having the property assessed. All I ever did in reference to that was to place our deed upon record, which at the time run to the church, and when we had our deed put upon the record, we claimed it was church property. I never made application to get this property exempted from taxation. We have been trying to get that far along. Plaintiff now offers in evidence Exhibit 23 and 24. Exhibit 23 is in words and figures as follows:—

This indenture made on the twenty-ninth day of May, A. D. one thousand eight hundred and eighty-six (1886), by and between Elizabeth Ann Cowdery, widow of Oliver Cowdery, deceased, of the County of McDonald and State of Missouri, party of the first part, and my daughter Marie Louise Johnson, the only living child of said Oliver Cowdery, of the County of McDonald, and State of Missouri, party of the second part,—

Witnesseth,—That the said party of the first part in consideration of the sum of natural love and affection for my said daughter, and the sum of one dollar to me paid by the said party of the second part, the receipt of which is hereby acknowledged, do by these presents remise, release, and forever quitclaim unto the said party of the second part the following described lots, tracts, and parcels of land, lying, being, and situate in the county of Jackson and State of Missouri, to wit, The west half of the northwest quarter of section thirty-three, township forty-nine and range thirty-three, west of the fifth principal meridian, and the north twelve acres of the east half of said northwest quarter of said section, town-
572 ship, and range, and the south fifty-two acres of the aforesaid east half of section 33, township 49, range 33; also a tract of eleven acres, more or less, in the northeast quarter of the northwest quarter of section 21, township 49, range 33, west fifth principal meridian described as follows, to wit: commencing 160 poles west of the northeast corner of said section, thence west 16 poles, and five links to
576 stake in the Independence and Westport road, thence south 22 degrees, west 12 poles and 10 links: thence south 47 degrees, west 18 poles to stake in Westport road near a spring; thence south 11 degrees, east 40 poles and 22 links; thence east 25 poles 22 links, thence north 64 poles 3 links to place of beginning. Also a tract of eighteen acres, two rods, and fifteen poles in said section 21, township 49, range 33, west fifth principal meridian, described as follows, to wit: Commencing 104 poles 22 feet west of the northeast corner of said section; thence with 9 degrees variation south 13 degrees, west 65 poles 15 links, thence west 40 poles 2½ links, thence north 64 poles 3 links; thence east to place of beginning. Also a tract of about forty acres in the southeast quarter of section 3, township 49, range 32, west fifth principal meridian. Commencing at a point 40 rods west of the east line 122 rods north of the south line of said section; thence 370 degrees west, 17 poles and 15 links. Thence south 64 degrees west 40 poles, thence south 55 de-

grees west 30 poles, thence south 42 degrees west 34 poles, thence south 15 degrees west 20 poles, thence east parallel with south section line to a point 40 rods west of east section line, thence to place of beginning.

To have and to hold the same with all the rights, immunities, privileges, and appurtenances thereto belonging unto the said party of the second part, and her heirs and assigns forever, so that neither the said party of the first part, nor her heirs nor any other person or persons for her or in her name or behalf, shall, or will hereafter claim or demand any right or title to the aforesaid premises, be excluded and forever barred.

In witness whereof the said party of the first part has hereunto set her hand and seal, the day and year first above written.

Her
ELIZABETH ANN X COWDERY.
mark.

Witness to mark,—
D. E. HAVENS,
H. HOWARD.

[Seal.]

STATE OF MISSOURI, } ss.
County of McDonald. }

On this twenty-ninth day of May, 1886, before me, a Notary Public, personally appeared Elizabeth Ann Cowdery, to me known to be the person described
577 in and who executed the foregoing instrument, and acknowledged that she executed the same as her free act and deed. And the said Elizabeth Ann Cowdery further declared herself to be single and unmarried.

In testimony whereof I have hereunto set my hand and affixed my official seal at my office in South West City, the day and year first above written.

My term expires March 21, 1888.

[SEAL.]

D. E. HAVENS, Notary Public.

Filed for record and duly recorded in my office on the 22d day of June, A. D. 1886, at 8 o'clock and 5 minutes a. m.

CHARLES D. LUCAS, Recorder,
By E. T. PACKARD, Deputy.

STATE OF MISSOURI, } ss.
County of Jackson. }

I, John W. Hinde, Recorder of Deeds, within and for said county of Jackson and State of Missouri, do hereby certify that the foregoing is a full, true, and complete transcript of the record of the Quitclaim Deed acknowledgement and note of record thereon indorsed from Elizabeth Ann Cowdery, to Marie Louise Johnson, as the same now remains on record in my office in Independence, Missouri.

Book 146, at page 139.

In testimony whereof, I have hereunto set my hand, and affixed the seal of said office, at my office in the city of Independence, in said county, this 21st day of April, A. D. 1892.

JOHN W. HINDE, Recorder,
[SEAL.] By W. R. HALL, Deputy.

The following is a true, correct, and accurate copy of Exhibit 24, offered in evidence on the part of the Plaintiff herein, to wit:—

NOTICE TO QUIT POSSESSION.

To Richard Hill, and all whom it may concern:—

You are hereby notified that the Reorganized Church of Jesus Christ of Latter Day Saints requires of you the possession of the premises known as the "Temple Lot," in Independence, Jackson county, and State of Missouri; the same being more particularly described and platted, as follows: Lots 15, 16, 17, 18, 19, 20, 21, and 22, all of Maxwell and Woodson's Addition to the city of Independence, aforesaid.

And you are further notified not to make or undertake any improvement upon the said premises or any part thereof, either in buildings or otherwise, and that any buildings or improvements of whatever character put upon said premises or any part therof, without the written consent of the said Reorganized Church, will be to the loss of those making the same; and the said Reorganized Church as the

legal and duly Incorporated Society in succession to the Church of Jesus Christ of Latter Day Saints, organized April 6, A. D. 1830, by Joseph Smith at Palmyra, New York, and which was disorganized A. D. 1844, demands of you a total cessation of all work, labor, or improvements on the said premises or any part thereof, and also the possession of the same, and unless you comply with this demand and surrender the premises, legal action will be instituted against you for the same, and for costs and damages.

G. A. BLAKESLEE, by Attorney,
Bishop and Trustee for Reorganized Church
of Jesus Christ of Latter Day Saints.

Independence, Missouri, June 11th, 1887.

ROBERT WESTON, of lawful age, being produced, sworn, and examined on the part of the Plaintiff, testified as follows:—

My name is Robert Weston. I am seventy-five years old last November. I reside here at Independence, Missouri. I am not certain how long I have resided here. I think my father moved here when I was about eleven or twelve years old, probably sixty-three years ago. I lived here in Independence from 1830 to 1834. I remember about the time the Latter Day Saints first came to Independence. I remember of their coming here, but I do not know the exact day that they first landed here. I rather think they came from
578 time to time. Do not think they all came at once. I remember the fact that they did come and that they went away again, but I do not remember the years exactly. I am pretty well acquainted with the location of what is known as the Temple property, and where it is; that is, I know it by passing and repassing and looking at it, for I had no interest in it other than that, but I have seen it a thousand times I guess. Yes, sir, I know where the stone church is that has recently been built down there, and this Temple property was right across the road from where the church is now; that is, on the south side of the Westport road. I think the road runs pretty near west, in a westerly direction, and runs right past the Temple property, and is the "Westport road;" that is what we called it in early days, in fact it is called that yet by some of the old timers. The road that
57 was called the "Lexington road" led up to it. The Lexington street terminated at the boundary of the city at that time. At that time the boundary of the city was a good deal further east than it is now.

Yes, sir, the street or road going west to the boundary of the city,
579 was known as the "Lexington street." After you passed the boundaries of the city it was known as the Westport road, that is what we always called it. That is the way it was known here at the time. It is rather hard to describe the present location of the Temple property. What I understand now as being the Temple Lot, is that piece of vacant ground across from the present Latter Day Saints' stone church building down there, but at the time I am talking about that whole piece of ground south of the Westport road there was called the Temple property. I do not know that it was laid off in any particular lot to build the temple on, but I had an idea that all that property down south of the Westport road was Temple ground. No,

sir, I do not know anything about a street called Temple street. I saw this Temple property last Sunday, went by it. That is the last time I think I have seen it, but I have seen it more than a thousand times, I suppose. The Temple property lies south of the stone church down there and across the Westport road or Lexington avenue. That roads runs between the church and the property known as the Temple Lot. I am not certain but what the highest point is very near there. The ground is inclosed now, but it had not been inclosed for a long time during the war, and after the war for a great many years it was not inclosed.

Yes, sir, there is a little meetinghouse on it now, just a small little plain meetinghouse. The denomination that has the meetinghouse there is called Mormons, but what branch of Mormons it is I
580 do not know. I do not know the parties that are identified with it, do not know that I am acquainted with them. I used to know Hedrick who was killed out here. He lived out here on the Lexington road, east of Independence.

I remember some of the circumstances attending the leaving of the Mormons from this section of the country. Just when they left I do not know so much about, for awhile before they left I had been sick a good while then, and was just able to be up and about. I know that the people of the town gathered up their guns, pistols, and weapons of that kind, and went out of the city, for the news had come that the Mormons were gathering out west of the city here to take the town. There was a great deal of excitement about it, and after awhile they said that the Mormons had concluded not to fight. After that they went away. I do not know the exact time of that, but there was a lot of excitement and trouble about it, but there was no killing or bloodshed or anything of that kind. I went a little west of town to see what I could see. The report was that the Mormons were coming out from Westport and from up above the Blue to take the town, but I could not see anything, and I think there was nothing to the report. I mean by the word *they* in my answer, that I referred to the citizens of Independence, who were not Mormons. I remember something about the destruction of property that belonged to the Mormons, or the people that were called Mormons. I know that property was destroyed, for there was a house just above where my father lived torn down, I mean it was burned up one night, and it was said that the anti-Mormon element did it. That belonged to my uncle.

I know a good deal about the destruction of the printing press owned by the Latter Day Saints. I saw the men go in and knock the door in, and take these little things, the type, and throw them out in the street, and they were there in the street for years. I think that was done in the afternoon. I cannot say how many people were engaged in that work, but the street was full of people. There
581 were lots of people there. I can recall the names of some of the people who were there. John King was the man who knocked the door

in. I saw him knock the door in. There was a man named Franklin there too, and the way I know Franklin was there was because there was an old fellow there by the name of Warner, and Franklin struck him and knocked him in the street. That is how I know these men were there. I was only a boy at this time, but I was on top of a shed and in a good place to see about all that was going on. I was there on the shed taking it all in, and I saw them fighting there, and this old man Franklin took a hand in it and knocked this man Warner down, and I heard Franklin say afterwards that he thought it was time to stop it. I do not recollect now what they knocked the door in with, but I think it was some stuff that they had hauled up there to make boards of. They used to make a good many boards out of stuff that would be cut for that purpose out of timber, and he took up one of these pieces, and went up stairs and knocked the door in with it. I used to know what they called these things, but I forget now what they did call them. It had some particular name, but it was a chunk of wood, a piece of timber.

There was lots of property destroyed. I did not see the mob do it myself, but I am satisfied that they did it, although I did not see it. I know Algernon Gilbert had a store here. I do not remember seeing the store broken into. I do not remember of seeing any goods in the street, still they could have been there, and I not have seen them,—might have been done and I not know it. This man Gilbert was a very nice fellow.

I remember a Bishop Partridge as they called him. I remember seeing some fellows have the old man out one day and putting tar and feathers on him. That was right up here in the courthouse lot they did that. Yes, sir, he was tarred and feathered. There was one other man besides him who was tarred and feathered at that time. I think his name was Allen. Well, if any of the good citizens had anything to do with it I do not recollect seeing them there. I do not think any of the good citizens had anything to do with it, but at that time we had lots of bad citizens. The fellow that was putting tar on him was Johnathan Sheperd, and he was not a good citizen by
57 any means, at least I would not consider him so. This man Jonathan Sheperd was a good-for-nothing, no-account fellow who never did anything good for himself or anybody else. There was another old fellow there named Bill Connor who was of no earthly account. He was living down here at the time. He was a regular ruffian, and was never happy unless he was in trouble or getting other people in it. He took a very active part in this tar and feather business, and then he wanted to cowhide Bishop Partridge, and they stopped him and would not let him do it.

There were a good many people there at the time, but I do not know how many, but there were a good many. I was a boy at the time and was running around kind of wild like looking for anything that might turn up, but I remember that at the time I thought what they were doing was not right and I felt right sorry for the old man.

Yes, sir, I was there, but I was on that roof, I was one of the audience. Yes, sir, I was there but I did not have anything to do with it, and I did not think it was right, either. There were plenty of people there who were looking on, but I cannot say who they were. I was a boy and wanted to see the sights, and I saw them on that occasion, too.

That incident made a very vivid impression on my mind, for I remember seeing the old Bishop going out of town west, and he had his hat up to keep the sun out of his eyes. I remember that I felt right sorry for the old fellow and felt that it was a great outrage. I do not know but I suppose it must have been a year that they were talking and fussing around before this time. I cannot tell you how long after this transaction it was that the Mormons left the city, but I think that was about the time they went away, just about that
582 time. I do not know that any of them were permitted to stay after that time. I do not think they did remain. I am not sure, but I do not think they did.

I cannot say how long this sentiment against the Mormons prevailed here, but it was a good long while, a good many years anyway. I cannot say exactly how long it was, but I know for a good many years there was a bitter feeling against them. It prevailed for several years. As far as my knowledge extends I must say that I do not know how long the sentiment prevailed against these people. I think though that as a people they were not well thought of in this section of the country, and in the minds of some people there was doubtless a very bitter feeling against them, and there are a great many people here yet who do not think much of the Mormons
583 anyway. There are people living here now that have no use for Mormons, but of course it is nothing like it was at that time. In that respect it was about the same then as it is now, and there were a good many years that they did not feel safe here, and the Mormons did not come around unless they did it secretly.

A brother-in-law of mine who was a Mormon had a blacksmith shop and a man by the name of Cornack came from out in the country here eight or nine miles and ordered him off. This was after the tarring and feathering of Partridge, and after the Mormons had left here, several years afterwards. My brother-in-law was suspected of being a Mormon, and so he was ordered off. I mentioned that simply for the purpose of showing the feeling against the Mormons. I want to say that I do not think the sentiment of the people generally was in favor of doing that thing. It was done by some rough characters. I do not think it represented the sentiment of the people generally. I do not think the best people of Independence approved of what was done, but then they did not rise up and try to prevent it, but let these rough characters work their will on them; but as far as driving them away is concerned, I think there were a great many good men wanted them to go away, but as far as doing them personal damage, I do not think they would have done it, or

584 that they did do it. Now I mean by that the best people. But there is no question but on the other hand the unruly, turbulent element that was here in early days and until after the war did do them a great deal of damage and made it unsafe for them to stay here. I know I would have felt that way if I had been in their place. It was a case where the mob got the upper hand. That is the way I look at it.

Well, what was done to prevent these outrages,—I was out in the country just about where this man Warnky lives now, and there was a little shanty there, and a lot of fellows came along there, and one of them jumped up on the top of that, and went to tear it down, and they were stopped and not permitted to do so. That was the nearest I ever saw them come to doing damage and not do it. There was a good deal of property destroyed, but I did not see it all done. I know they did not tear that little shanty down then, but they may have done so afterwards.

Yes, sir, I was at Far West. I went there I believe it was in 1838. I was with the militia men. By that time I was old enough to bear arms. There were a lot of troops or militia called out by the order
585 of Governor Boggs, and Tom Wilson got up a company here, and as they said we had to go, we went. That was the way I got to Far West. I hardly know what we went for at the time, but it was to surprise the Mormons, I think.

I am not certain about the character of the Temple Lot, but I think it was timbered, or the greater part of it, but I think there was a clearing put on it at the time. I think it was timbered, for the whole country around here was timbered at that time. The prairie land did not come any nearer the river than out about a mile and a half from here, and that was the closest prairie there was. I always understood that the Mormon people congregated on that land on Sundays, but I did not see much of them there. The fact is that I did not know that I saw them meeting there any more than other citizens. I know that I have run over it, have been over it often,
5[illegible] time and again; that is, the piece of ground you are talking about, and they always called it the Temple Lot; I remember that.

It has been called the Temple Lot ever since they had it, but I do not remember the year so as to speak definitely. I know it was soon after we came here, and that is all I remember about it. Yes, sir, it is true that whenever this property was spoken of by anybody from
586 1830 or 1831 down to the present time it has been spoken of as the Temple property or Temple Lot; that is, from the time they first got it, that was the way they designated it, everybody who lived here at that time knew where it was, and it was known as the Temple Lot; and if a stranger at any time during all these years from 1830 to the present should have asked me to point out the Temple Lot I should have gone to this same spot, the spot where that little building now is; that is, the little church building.

CROSS-EXAMINATION.

587 The piece of ground that was called the Temple Lot in 1830, '31, '32, '33, and up to '34, was the piece of ground that is called the Temple Lot now; that is, it was a tract of land south of the Westport road and across from the stone church that is built there now. They called it the Temple Lot then, but I cannot say how many acres there were in it, or whether it was laid off into a lot or not; but I do know that they called it the Temple Lot. We always called it the Temple Lot.

Yes, sir, I have seen Mormons on this Temple Lot, I have seen some shanties on it, and they were going to pull them down, but they would not let it be done. I do not know anything about the citizens of the town holding picnics on that ground; I am not a picnic man myself, and if that was done I do not know anything about it. I do not recollect of any fence along the Westport road embracing the whole distance of that lot along the south side. I do not ever recollect of seeing the land in cultivation. It is nice pretty ground, the finest piece of ground in the country I think. I do not state positively that all that piece of ground was timbered, but my impression is that it was timbered land. It had timber on it at one time, but how much of it was timbered when they got it I do not know. Everybody used wood for fuel at that time, and everybody in town got their fuel from here, for the country all around here at that time was timbered.

---

593 JOHN H. THOMAS, of lawful age, being produced, sworn, and examined, testified as follows:—

My name is John H. Thomas. I am sixty-nine years old; I reside in Independence, Missouri. I came to Independence a year ago last fall; never lived here before that time, for I was afraid to come here to live. I lived in the State of Mississippi in 1834; came from North Carolina to Mississippi, and from Mississippi, I went to Nauvoo, Illinois, in the spring of 1845. I remained there until the spring of 1846, at the time of the breaking up there. I was a member of the Latter Day Saints' Church at that time; became a member in 1842, in Mississippi.

In 1846, I went from Nauvoo, in a pioneer company, to open a road across the State of Iowa. At that time there was no settlemement west of Nauvoo only for about fifty miles, and what was called Richardson's Point was the last settlement there was in the State of Iowa. The reason we left Nauvoo was because we were driven out of there on account of the mob driving us out. There was a company of one hundred, that was sent out to open this road across Iowa, for the emigrants on their migration to the West. The company was to go across the State, and open the road, and put bridges
594 across all the streams that needed it, and establish a ferry across the Missouri River into what was called Winter Quarters eight miles

above Omaha, or where Omaha now stands; for there was no Omaha there at that time; it was Omaha Nation then.

I went from Winter Quarters in the spring of 1847, after the Spring Conference there, to St. Joe, Missouri; went down there to make a living for myself for I had about run out at that time; but that was not the only reason that I left Winter Quarters, nor the main reason. I left Winter Quarters because I was satisfied in my own mind that everything was not as it should be; was satisfied that the Twelve or what was there then—Brigham Young, Heber C. Kimball, and Richards and the rest of the Twelve that were there had forsaken the original platform that we stood on; that is, the doctrine that is contained in the Bible, the Book of Mormon, and the Book of Doctrine and Covenants.

They forsook the doctrine taught in these books and treated them as not worth the ashes of a rye straw, and did not consider them to be as good as a last year's almanac. The substitute they established for these books was that the members of the church should obey the Council of the Twelve in all things. The Council of the Twelve was considered supreme.

I went there to Winter Quarters with them, but I saw how things were going on, and I got away as soon as I could, for I was too well posted to follow them any further. I found out then for the first time that what I heard was true, and what they were doing; but the same thing was talked of, for the first time I heard it was there in Nauvoo, in the spring of 1845, that polygamy was being practiced secretly amongst some of them; and I found out it was a fact when I got to Winter Quarters in 1846. I had heard of it before, but that was the first time I found it out to be a fact beyond a doubt.

I did not have any particular trouble about getting away from
595 Winter Quarters, but I would have had if I had undertaken to get away on my own hook, but the scheme I worked got me out of Winter Quarters without any special difficulty. I was very intimate with Brigham Young. He claimed authority over the ferry that we
57 made there, and he would not allow anyone to cross the river back on the Iowa side without a permit from him, or without his knowledge. He said we could apostatize all we had a mind to, but the property that was once in the church never could apostatize, and he would keep that.

Well, I went to him and told him I wanted to go down into Mis-
5 souri, or down into Egypt as we called it, to St. Joseph; for I was a carpenter, and wages were good there, and I could make a good living; and I had run out of money, and wanted a permit to go over the river and go down to St. Joseph. After I made that request Brigham Young ordered his secretary, Jed. Grant, to make out the permit for me. I was well acquainted with Brigham Young, and Jed. Grant; in fact I was well acquainted with all the Twelve that were there, as I was in a good many of their councils and their confidence; and that is how I came to get a little more intimate with

Brigham Young than the generality of the people did, and had an understanding of what was going on a good deal better than many did that were there.

It was not on account of my financial condition that I left Winter Quarters; I had made up my mind to leave anyway, and was going across the river some way or other; for I had made up my mind to leave and run the risk, but I stayed until after the Spring Conference. The Spring Conference was held on the 6th of April.

At that conference the main question at issue was, that none of Joseph Smith's family were along. At that time we understood and believed as we do to-day, that Joseph's family, or the head of his posterity rather, young Joseph, should be the successor of his father. We understood that would be the case, and all attempts by Brigham Young to get any of his family to accompany him were failures. Brigham had offered inducements, all that could be offered; but they would not go, none of Joseph Smith's family, because they had no confidence in Brigham Young, and another thing was, there was nothing to indicate that there was any need of going to California, for they were supposed then to be going to California, and in the Spring Conference the old elders of the church were finding a good deal of fault, for they all believed universally that through Joseph Smith and his posterity, as was promised in the Book of Doctrine and Covenants, that they had the authority to rule in power, and would remain in the church.

596 There were a great many of the ministry of the church who were dissatisfied and gave expression to their dissatisfaction, and in that conference Brigham Young made the statement, and Heber C. Kimball, and Dr. Richards, and the rest of the Twelve that were in Winter Quarters there, that they did not want anything more; that they had talked it over, for it had got noised abroad there and back in Illinois that the family was there in Illinois; and Brigham said we might just as well draw a knife and cut the boy's throat, as to be talking of such a thing, because if it was known that the promise was made to young Joseph in Illinois that he should be the leader of the church he would be killed. Brigham said not to talk of such a thing, or even hint at it, for if the people back there in Illinois thought that the Saints expected that young Joseph Smith would be the head of the church, and if that knowledge got abroad in Illinois that he was made successor to his father, that the people of Illinois would put an end to the family of Joseph Smith. So he said that to publicly talk of such a thing would be like taking a knife and cutting the throats of that family.

That was publicly talked of in Winter Quarters in 1846. Brigham Young stated at that conference himself that no man could stand in Joseph Smith's place, because he said he had seen him ordained, set apart to fill his father's place, and that place belonged to him by right, and God would take care of him and bring him forward at the right time; there was no trouble about that at all.

There were a great many people present there who heard the same thing said by Brigham Young that I have just testified to, and there are a great many of them living to-day.

When I got permission to cross the river, that just suited me. I made up my mind then to go to St. Joseph, and I started right away. I lived at St. Joe from the spring of 1847, until 1853. In 1853, about thirty or forty of us all moved up into Iowa together. I mean that thirty-five or forty old Latter Day Saints that went from Winter
597 Quarters and places in Iowa down to St. Joseph, all went back up into Iowa. We did not have any organization in St Joseph; there were several reasons why we did not have one; there were a great many bitter enemies of the Latter Day Saints there at the start.

We held our meetings there regularly after we had been there a while, and in time showed the people that we were honorable, and were not afraid to work for our living, and in that way gained many friends there. We began by holding our meetings at private houses, first at one place, then another. We held meetings every Sunday almost, kind of secret meetings amongst ourselves—had no place of public worship.

When we left St. Joseph we went to Council Bluffs, and from there we moved up about sixty miles above Council Bluffs, we all went in a body from St. Joseph to Council Bluffs, and settled in what is now Monona county. We had our public place of worship in Council Bluffs, or in the neighborhood around there. We held our meetings, read the books, gave our views, and talked about "Old Mormonism," as the people called it.

Yes sir, I know that Jackson county, Missouri, had particular attractions for the Mormon people. They had been taught, and the revelations were recorded in their standard books, that it would be a center place or gathering point for all the Latter Day Saints. We believe it will be a center place for the church; that is what our books teach. We believe it will eventually be; and all Latter Day Saints have always held to that belief, and hold it so yet. Wherever
598 they are anywhere in the world they believe that yet. They believe that the Lord is preparing to gather his people together in the latter days before the coming of Christ; that is the faith of all the members of the church that I have ever met with yet.

One of the reasons why the Latter Day Saints have not returned to Jackson county before this was, because of the influence or prejudice of the people against them generally. They had to leave this county on that account, and they dare not come back here to live, for there was no safety for them. They had fears of the outrages that were perpetrated on them in 1833 and 1838, and from what happened to them while they were here, they were not to be blamed for being afraid to come back. They had fears of that violence, of course, and I do not think from the knowledge that I have got from the people who lived here at that time, and I have got pretty well posted in regard to what went on here, and I do not think it would

have been safe for them at any time until a few years back, to have returned here, not since the Rebellion.

CROSS-EXAMINATION.

600 Yes, sir, the Rebellion was in 1865, from 1861, to 1865. No, sir, it was not safe for the Latter Day Saints to be here at that time. I came very near trading my farm for a place near here in 1868; the man had to leave here to save his life, and I was afraid to trade with him, because if I had traded with him I would have moved here, and I was afraid to do that.

I just mention that to show the temper of the people, and show what they would do if such a religious denomination should attempt to come back here again, for at that time they were in the same vicious disposition they had been before. I would have traded with this man pretty quick, but I was afraid to come here, and I do not think I am much of a coward, either; but I do not rush into danger if I can avoid it.

I became acquainted with Brigham Young in 1845, when I first went to Nauvoo. First time I went to Winter Quarters was with what is known as a pioneer company; there were one hundred men who were sent to make a road across the State of Iowa, for people to travel. First went to Winter Quarters in 1846, about the first of July, or the last of June, returned to Nauvoo the same year, and then returned to Winter Quarters and staid there until the spring of 1847; then I moved to St. Joseph, Missouri; moved back into Iowa, in 1853.

Yes, sir, I knew Charles C. Rich; he was at Winter Quarters; he was not one of the apostles at that time; I think he was one of the high priests.

Yes, sir, I stated in my examination in chief, that I heard merchants in St. Joseph, Missouri, talking about the condition of affairs
606 in Jackson County, and I said it was Middleton and Riley, two merchants in business there in St. Joseph as partners, and they carried on a large business there. They said they thought it was not safe for Latter Day Saints to settle in this part of the country, or come down here. They said they thought the feeling was against such a thing, and it would not be safe to do so or attempt to do so. I became acquainted with these men in the spring of 1847, and was acquainted with both of them until the spring of 1853.

I talked with a number of persons about this same matter in St. Joseph, old settlers who lived there; one man was Dr. Thompson, and another man who was a lawyer by the name of Thompson; I inquired of them in regard to whether the Latter Day Saints could live in that country, they thought it would be dangerous for them to attempt to do so.

I first learned about what they call endowments, in Nauvoo, in the winter of 1845, or the first part of 1846; it was the first winter after I got there, anyway.

REDIRECT EXAMINATION.

308 The first thing I ever heard or knew of endowments in the church was after I went to Nauvoo, in 1845; it was in the spring of 1845 that I first heard of it,—that was when I first read of it, but I have run across the church records of endowments given in the early days of the church when the temple was built in Kirtland.

What I understand by endowments, what it should be, would be the teachings and instructions. I mean the instructions delivered from God through the sermons of his prophets and apostles; that would mean endowment in the manner which I understand it; an endowment would be a special gift of the Holy Spirit upon the ministers of the church who were going out to preach; it was instruction given to the ministry of the church more particularly.

This endowment consisted of the Spirit of God being given to the prophet and to the ministry of the church, and instructions to send them out to preach in the fields and labor in the interests of the church wherever they would be called to labor; they were to be sent to the different nations of the earth by a special revelation. I mean the same kind of endowment as that which was had on the day of Pentecost.

It was not done in secrecy; I do not think there was any secrecy in endowment from God.

RECROSS-EXAMINATION.

The endowments at Nauvoo were different from those at Kirtland, the endowment I took at Nauvoo, I do not know whether I can state what they are or not, there is really nothing to state about it. As far as I understand the endowment at Nauvoo, it was different from the endowments in Kirtland, Ohio. The long and short of it is that
309 we do not accept that organization under Brigham Young, after 1844, perhaps I did seem to accept it for a while, but I did not stay with it any longer than I had to when I found out what it was. Ex-
5 hibit E, paragraph 1, section 27, offered in evidence by Plaintiff is as follows:—

> Hearken, O ye elders of my church, saith the Lord your God, who have assembled yourselves together, according to my commandments, in this land which is the land of Missouri, which is the land which I have appointed and consecrated for the gathering of the saints: wherefore this is the land of promise, and the place for the city of Zion. And thus saith the Lord your God, if you will receive wisdom, here is wisdom.—Behold the place which is now called Independence, is the center place, and the spot for the temple is lying westward upon a lot which is not far from the courthouse: wherefore it is wisdom that the land should be purchased by the saints; and also every tract lying westward, even unto the line running directly between Jew and Gentile. And also every tract bordering by the prairies, inasmuch as my disciples are enabled to buy lands. Behold this is wisdom, that they may obtain it for an everlasting inheritance."

Exhibit W, being the title page of which book is as follows: "The
310 spiritual wife system proven false, and the true order of church discipline illustrated by Granville Hedrick, Bloomington, Illinois, W. E. Foote's power press printing house, 1856."

The Plaintiff now offers the same in evidence.

Plaintiff now offers Defendants or any of them or their counsel the privilege of examining any books offered in evidence by the Plaintiff, and any and all parts of the books so offered.

We now offer Exhibit W, in evidence for the purpose of showing what was recognized as the true name of the church by the author Granville Hedrick, and also for the purpose of showing what Book of Doctrine and Covenants was then recognized, at the date of the publication of this work in 1856. And also for the purpose of showing the doctrinal views of the author at that date. The complete preface is offered, pages 3, 4, and 5, reading as follows:—

PREFACE.

611 In presenting this little volume before the Church of Jesus Christ of Latter Day Saints, it is hoped that due allowance will be made; for in treating upon a subject so disgusting to every feeling of virtue, and so palpably absurd as the doctrine of polygamy, which is taught and practiced by Brigham Young and his party, would seem to every chaste and reflecting mind to need no comment in proof of its falsity. But the wretched perversions of good and holy principles, feigned by the misapplication of sacred Scripture, so as to decoy the minds of many to credit their sophistry; and seeing the calamitous train of evils that so base an apostasy has brought upon this people, and feeling for the welfare of this church, and knowing that such a system of whoredoms is wholly unauthorized in the doctrine given for a foundation of faith and practice in this church, and is a downright perversion of her laws and an imposition upon the members, therefore seeing the great necessity of a defence being made in support of the true principles as given to this church in the beginning; and also the frequent solicitations to the same by my brethren, which has induced me to present an exposition of their abominable doctrines of whoredoms as found in their own standard publications of that apostate division, of which Brigham Young holds the Presidency; and those references and quotations that I have given in this work is but a small portion of apostate doctrines that is found in their own standard works. But let the candid reader compare their doctrine with the standard of truth, and he need not be at a loss to perceive that it is positively and certainly false. The Book of Mormon referred to in this work is of the third edition, (Nauvoo, Illinois,) and also the Book of Doctrine and Covenants of the second European editions, Liverpool.

612 The remarks that are presented on the subject of priesthood and church organization is not pretended to be full and complete, in containing all that might be profitably introduced on this all, and infinitely important subject; but it is briefly presented in as plain and simple manner as is practicable with its author, and endeavoring to observe that style of simplicity that would be plain and easy to the understanding of all who may read: and that a sufficiency is given to guard off all imposition, and to establish every mind in regard to the true order of the Presidency. I will here present a mirror for Brigham Young to behold himself in, and all his doings; and also of all his followers as found in the Book of Mormon, page 174, Book of Mosiah, 7th chapter: "And now it came to pass that Zeniff conferred the kingdom upon Noah, one of his sons; therefore Noah began to reign in his stead: and he did not walk in the ways of his father. For behold, he did not keep the commandments of God, but he did walk after the desires of his one heart. And he had many wives and concubines. And did cause his people to commit sin, and do that which was abominable in the sight of the Lord. Yea, and they did commit whoredoms, and all manner of wickedness. And he laid a tax of one fifth part on all they possessed; a fifth part of their gold and of their silver, and a fifth part of their ziff, and of their copper, and of their brass and their iron; and a fifth part of their fatlings; and also, a fifth part of all

their grain. And all this did he take, to support himself, and his wives, and his concubines, and also, his priests, and their wives, and their concubines: thus he had changed the affairs of the kingdom. For he put down all the priests that had been consecrated by his father, and consecrated new ones in their stead, such as were lifted up in the pride of their hearts. Yea, and thus they were supported in their laziness, and in their idolatry, and in their whoredoms, by the taxes which King Noah had put upon his people; thus did the people labor exceedingly to support iniquity. Yea, and they also became idolatrous, because they were deceived by the vain and flattering words of the king and priests: for they did speak flattering things unto them."

Also from Exhibit W, that portion of book thirteen which begins with the pronoun *I* in the ninth line, and ending with the words *but do*, on the first line of page 14, also on page 19, of Exhibit W, and from page 92 of Exhibit W. The extract from Exhibit W, above offered in evidence from page 13, is in words and figures as follows, to wit:—

I make mention of these publications for the benefit of those who have not yet seen their writings on the subject of polygamy, or the spiritual wife system, that many of the brethren in this part of the country could not credit such calumniating reports, at first wishing something better to befall their persecuted brethren; but alas it is true that they do both teach and practice the doctrine of polygamy in the most wicked and degrading manner at the Salt Lake Valley; and they are now publishing their nefarious doctrines in the most impudent manner to all the civilized world, and their abominable traffic in such polluted doctrines is destined to bring down the vengeance of the just God of heaven upon the heads of all those who hold fellowship with such apostate doctrines, and it is high time that the pure in heart take some special measures for their deliverance from the awful crash of destructions which is hanging over the heads of the apostates of the Church of Jesus Christ, and speedily step forward upon the rock of their deliverance and plan of salvation, which is the Book of Mormon, Bible and Book of Covenants, which the Saints must come to, and not only say, but do.

The extract above offered in evidence from Exhibit W, on page 15, is in words and figures as follows, to wit:—

Was the Book of Mormon, and Bible, and Book of Covenants to be the rock and pillar of their faith, for the foundation of the church which was organized on the 6th day of April, 1830, and was these three inspired books to be a standard for the people of God? Yes, this position is true, and cannot be controverted by any man or set of men. Then Joseph organized the church on that rock or plan of salvation, as contained in those three inspired books. This was the identical great work that Joseph was called to do. Do you, brethren believe this? If you do, can you say, that any of the parties, as they now stand, are built upon that foundation that the apostles and prophets had laid, as is contained in those three inspired books, written by the inspired prophets and apostles of the Son of God, and that this Church of Jesus Christ was founded, and organized upon by Joseph Smith, Oliver Cowdery, and Joseph Smith, Jr., were the first elders of this church; they preached and administered to others those identical doctrines in that perfect sameness who became members, and also some elders of this identical Church of Jesus Christ, whose principles of doctrine, of laws, of church rules and regulations, of gospel precepts, of faith, of hope, of charity, of piety, virtue, meekness, patience, temperance, chastity, courage, godliness, and of all things that is needful for the man of God, that he may be thoroughly furnished with every good word and work in Jesus Christ, is the doctrine contained in these three books. The order of the doctrine of the priesthood to Joseph, and from Joseph to the church and that, too, for the last time, and the ordaining of high priests, elders, teachers, deacons, etc., have been done and performed by that man of God, who

was called to lay the foundation of that great work. In the Book of Covenants we have the order of the priesthood, the records of Joseph's labors and many revelations, blessed be God.

The extract from Exhibit W, above offered in evidence from page
613 19, is in words and figures as follows, to wit:—

Now as it has fallen to my lot to take up my pen and vindicate the cause of truth as it is in the Church of Jesus Christ, as established in these last days by that man of God, Joseph Smith, who was called and inspired to lay the foundation anew of the only identical church of Jesus Christ, (since all others have apostatized in omitting some of the doctrines and commandments of God, and substituting the commandments and precepts of men for doctrine, thereby apostatizing themselves from the true faith of the lamb of God:) and that the Church of Jesus Christ being established again anew, upon the foundation of the apostles and prophets, of the Son of God, on the 6th day of April, A. D. 1830, embracing the doctrine contained in the Bible, Book of Mormon, and Book of Doctrine and Covenants for their faith and practice. These three above named inspired volumes were received by the whole Church of Christ as established anew again by Joseph Smith, to be the rock, and pillar and groundwork of their faith and doctrine in Christ Jesus, in the first days and years of this the identical Church of Jesus Christ: hence we have the foundation of this church before us, of which I profess to be a member.

Now brethren, everywhere in the world, wheresoever you may be, allow me to appeal to you and your own consciences, in all candor, honesty, and fairness, before God, whom you have professed to serve, love, and obey, and by whom you will be judged, according to his written word, is it not an apostasy to depart from the principles of the doctrine that is contained in the Bible, Book of Mormon, and Book of Doctrine and Covenants, given in the foundation of the church, for her faith, rules, and practice? I ask you, Is it not an apostasy to depart from those sacred things given from heaven, by the God of heaven for our salvation? What say ye? O, reader, reflect and think before it is too late, and see whether you are certainly right. Now, brethren, you have for a long time preached to the various Protestant churches, concerning their apostasy, showing that they have apostatized from the primitive order of the gospel: showing that there was none of them
614 legally the true and identical Church of Jesus Christ. How did you do this? You showed them that they were not built upon the principles of the gospel as taught by the apostles, and our Lord and Savior Jesus Christ, as contained in the Bible, the New Testament part in particular: that they did not teach and practice according to that sacred book, which was all they had, which contains the writings of the apostles, and the sayings of our Savior Jesus Christ. This sacred volume then, was the standard to try the different faiths, creeds, and disciplines by: then according to the things written in that sacred book, the Holy Bible you put the whole test, saying (to the law, and to the testimony, if they speak not according to this word, it is because there is no light in them, Isaiah 8: 20) this, brethren, was often your text, are you now as ready and as willing as ever to quote the same?

That sacred book, the Bible, then was the substance of your text: and the law and testimony to which you wished to bring your disputant to be tried by. Now, suppose they, your sectarian friends, had succeeded in proving their doctrine to be precisely according to the Bible, would they not have been right? Most assuredly they would. And how would you have proven them wrong, unless by the Bible, as you made that the test book? But they did not prove their doctrine to be all precisely according to the Bible: therefore, you proceeded and proved that their doctrine was not all precisely according to the Bible, and that they were not wholly founded upon the Bible. "Look that thou make them after their pattern, which was showed thee in the Mount."—Exodus 25: 40.

Again: "See saith he, that thou make all things according to the pattern shown to thee in the Mount."—Heb. 8: 5. If they speak not according to the

word of the Lord God, it is because there is no light in them. Therefore, inasmuch as they could not prove that they were precisely founded and built upon the doctrine of the apostles and prophets, you declared they were in a state of apostasy and proceeded to prove it. How did you do it? Well, I will tell you, friends, how you did it, or could have done it easily. You proceeded to prove that they omitted some of the commandments of God, given for their salvation which was essential. You showed that some of the ordinances they did not perform aright, according to the gospel pattern. You also proved by showing that they had substituted the opinions and commandments of men for doctrines: and in many respects, now having done as well as they knew how: therefore, you showed that they were not built upon the principles of the gospel of Jesus Christ and the apostles, according to the Holy Scriptures, which was given for the foundation of the saints of God; therefore, you proved that they were not built upon the foundation of the apostles and the prophets: consequently, they were plainly shown to be in a state of apostasy, because they had departed from the right way. Now, brethren, this is the way you used to treat the sectarian world, whenever you found a departure from a scriptural order of things. You cried out apostasy, man of sin, fallen people, all in dark, etc. Now, brethren, let us turn the scale, and examine the other side. It is right that a people should be examined as to their faith and practice and also that they should examine themselves: even if it should turn out that some of you, brethren, have departed also from the faith, and the practice of your profession, as you first were taught and received. You first received the Book of Mormon, and the Bible, and Book of Covenants to practice and build upon the sacred things written in those inspired books. This was your faith at the first. Have you departed from that sacred order of things, which was laid for the foundation of your faith in Jesus Christ? I ask, have you departed from it?

The following is the extract offered in evidence from page 92 of said Exhibit W, in words and figures, to wit:—

Now if anyone should desire further proof in regard to the things given for a standard and foundation for this church, just turn and read from the 28th to 33d pages in this work. There you will find proof positive, showing plainly that the doctrine contained in those three inspired volumes, were given to the church for a code of laws, to govern and regulate all matters and affairs in this church, whatever, and to be a standard for the Church of Jesus Christ of Latter Day Saints. Hence, brethren, I presume we have it plain before us, relative to the subject of the foundation of this church, and I have also shown that the spiritual wife system is a departure from the foundation and standard of faith and doctrine upon which this church was first founded and built up in: also that this departure is a heresy, and that those who are engaged in the practice of polygamy are in an awful wicked state of apostasy.

615 By E. L. KELLEY,—"Plaintiff offers in evidence from the book, *Journal of Discourses*, identified by the witness Brackenbury, and marked Exhibit One: and on page 5 we introduce all that part in the second column beginning with the word *now* on the ninth line, and extending to the word *succession* in the first line of the first column on page 51, showing the apostasy with reference to the true God; this being incorporated into the doctrine of the faction that went west to Utah in 1847, under the leadership of Brigham Young.

Also on page 83, in the second column, all that part beginning in the fourteenth line from the bottom of the page, with the words *I say*, and extending to the bottom of the page, showing the manner of dealing with apostates; also on page 161 in the second column, beginning with the fifteenth line from the top of the page, and ex-

tending to the fourth line from the top of the first column on page 162.

Plaintiff offers in evidence the title page of this work entitled: "*Journal of Discourses* by Brigham Young, President of the Church of Jesus Christ of Latter Day Saints, His Two Counsellors, the Twelve Apostles, and others. Reported by G. D. Watt, and humbly dedicated to the Latter Day Saints in all the world. Volume 1. Liverpool: Published by F. D. and S. W. Richards, 15, Wilton Street. London: Latter Day Saints' Book Depot, 35, Jewin Street, City. 1854." With the introduction of the matter on page fifty, also the
616 following as a heading of the discourse in which the language occurs: "A sermon delivered by President Brigham Young, in the Tabernacle, Great Salt Lake City, April 9, 1852;" also an address delivered by President Brigham Young, in the Tabernacle, Great Salt Lake City, March 27, 1853, and in connection with that part offered from page 161, I offer the heading as follows: "An address delivered by Heber C. Kimball, in the Tabernacle, Great Salt Lake City, October 9, 1852, at the General Conference." All are found in the same exhibit marked 1. The following is that part of the exhibit referred to as Exhibit 1, introduced in evidence from page 50, in words and figures, to wit:—

Now hear it, O inhabitants of the earth, Jew and Gentile, Saint and sinner! When our father Adam came into the garden of Eden, he came into it with a *celestial body*, and brought Eve, *one of his wives*, with him. He helped to make and organize this world. He is MICHAEL *the Archangel*, the ANCIENT OF DAYS! about whom holy men have written and spoken—HE *is our* FATHER *and our* GOD, *and the only God with whom* WE *have to do*. Every man upon the earth, professing Christians or non-professing, must hear it, and *will know it sooner or later*. They came here, organized the raw material, and arranged in their order the herbs of the field, the trees, the apple, the peach, the plum, the pear, and every other fruit that is desirable and good for man: the seed was brought from another sphere, and planted in this earth. The thistle, the thorn, the brier, and the obnoxious weed, did *not* appear until after the earth was cursed. When Adam and Eve had eaten of the forbidden fruit, their bodies became mortal from *its effects*, and therefore their offspring was mortal. When the Virgin Mary conceived the child Jesus, the Father had begotten him in his own likeness. He was *not* begotten by the Holy Ghost. And who is the Father? He is the first of the human family; and when he took a tabernacle, it was begotten by *his Father* in heaven, after the same manner as the tabernacles of Cain, Abel, and the rest of the sons and daughters of Adam and Eve; from the fruits of the earth, the first earthly tabernacles were originated by the Father, and so on in succession.

The following is that part of the exhibit referred to as Exhibit 1, introduced in evidence from page 83, in words and figures, to wit:—

Rather than that apostates should flourish here, I will unsheath my bowie knife, and conquer or die. [Great commotion in the congregation, and a simultaneous burst of feeling, assenting to the declaration.] Now, you nasty apostates, clear out, or judgment will be put to the line, and righteousness to the plummet. [Voices, generally, "go it," "go it."] If you say it is right raise your hands. [All hands up.] Let us call upon the Lord to assist us in this, and every good work.

The following is a part of the exhibit referred to as 1, offered in evidence on the part of the Plaintiff, in words and figures, to wit, found on page 161:—

What need you care where you go if you go according to direction, and when you get to Coal Creek or Iron county, be subject to that man who is placed there to rule you, just the same as you would be subject to President Young, if you were here, because that man is delegated by this conference, and sanctioned by this people, and that man's word is law. And so it is with the Bishops: they are our fathers, our governors, and we are their household. It is for them to provide for their household, and watch over them, and govern and control them. They are potters to mould you, and when you are sent forth to the nations of the earth, you go to gather the clay, and bring it here to the great potter, to be ground and moulded until it becomes passive, and then to be taken and formed into vessels, according to the dictation of the presiding potter. . I have to do the work he tells me to do, and you have to do the same: and he has to do the work told him by the great master potter in heaven and on earth. If Brother Brigham tells me to do a thing it is the same as though the Lord told me to do it. This is the course for you and every other Saint to take, and by your taking this course, I will tell you, brethren, you are on the top of the heap. We are in the tops of the mountains, and when the stone shall roll down from the mountains, it will smash the earth, and break in pieces everything that opposes its course; but the stone has to get up there before it can roll down.

CHARLES R. ROSS, of lawful age, being produced, sworn, and ex-
617 amined on the part of the Plaintiff, testified as follows:—

My name is Charles R. Ross. I reside in Caldwell county, at Braymer. I will be seventy-nine years old the 16th day of next August. I have lived in Caldwell county, Missouri, since the first day of February, 1839. Previous to that time I lived on the edge of Livingston county, that adjoins Caldwell county east. I came there on the 5th of November, 1838; before that I lived in Tennessee, eighty miles from Nashville, in Warren county.

I never knew anything about a religious sect of people called Mormons until I was coming up here; was on my way; heard of them at Keytsville, I suppose in Chariton county, Missouri. We camped
618 there at that place in Chariton county; we were going up the line of Caldwell and Livingston, and it was while we were camped there that I saw the Mormons first. There were five families of us in all, and we were moving in the old-fashioned way with wagons up there to where my brother-in-law lived on the edge of Livingston county.

When I came to Keytsville, I heard there was a wounded Mormon there. After I got there, there was a guard there, and they examined everybody that came up, and if they had wagon boxes on their wagons they were not allowed to go through without some kind of an examination. We had some niggers and some hounds with us, and they said we were not Mormons, and let us go through. Keytsville was a pretty small town then, and when these people came up they halted them, the guard did, and went and hunted this man. We wanted to see this wounded Mormon.

These people were spoken of as Mormons. My understanding was that they had to get away from that country by the 10th of the next June, 1839. The order of their leaving the country and getting out of there was the orders of the Government, as I understood it; and I mean by *they*, that both sides told me—the Gentiles and Mor-

mons. The Gentiles were on one side and the Mormons on the other;—they both told me that. The Gentiles were the Missourians,—the citizens of Missouri. Both sides told me that the Mormons were compelled to leave by an order of the Governor of Missouri. I suppose I met some forty or fifty of these Mormons, and perhaps about the same number of the other side. I was in a mill
619 there at the time, and the Mormons had to come there to get their grinding done, and we would talk matters over, and they would tell me when they would be getting their grinding done. I mean Haun's Mill; it was the only mill for many miles around.

The ones who were opposed to the Mormons were called Gentiles. I think they were all gone from Missouri within six months from the
621 time I got there. I cannot tell you how many there were, but there were a good many of them left. Of those who remained, there might have been fifteen or sixteen families, maybe twenty, who took the oath of allegiance. I do not belong to the Reorganized Church of
622 Jesus Christ, and am not identified with it in any way. I used to belong to the old Methodists, but I do not belong to anything particularly now.

Yes, sir, I have seen a book called A History of Caldwell and Livingston Counties, published in 1886; I suppose there is a good deal of my chat in it too. The gentleman who was writing it staid a night or two with me; I was running a hotel in that county.

I think the great body of the Mormon people left Caldwell county in May, 1839. There was a good deal of hard feeling against Latter Day Saints, or the Mormons, as they were commonly called, in that locality; there is no doubt about that,—but both parties treated me all right. I cannot tell you how long this feeling continued for some have a prejudice against them to-day; that is against the people called the Mormons. There is no doubt of that. There is no doubt that some people have a prejudice against the Mormons to-day, and I mean that that prejudice has continued from that time down to the present day. In certain families there has been a prejudice against them from that time down to the present day.

I think I am the same Ross who is mentioned in this History of Caldwell and Livingston Counties, I have no doubt of it.

CROSS-EXAMINATION.

I came to Caldwell county first in 1839, in February, 1839; and I have never lived anywhere else since I came here. Yes, sir, I spoke of the prejudices that existed in that county, Caldwell county, against the Mormons; that is the old citizens who were there, and were in those fights, and at that surrender; and all those things have a prejudice against the Mormons to this day; there is a lingering prejudice that has descended since that time,—that prejudice against the Mormons.

There are people there that do not like the Mormons; the churches are split up there you know, and there is some prejudice in that

way; but that is a different kind of prejudice entirely. There may be some people called Latter Day Saints in Caldwell county now, but I
623 do not think there are many of them if there are any at all. I am pretty sure that they have no church in our county.

I knew Whitmers; one lived at Richmond, and the other one died at Far West, in Caldwell county. I knew the youngest son of old man Whitmer; they were Mormons, but they took the oath of allegiance and stayed there; they stayed after the expulsion, as it is termed.

I cannot recollect the names of any of those who left in 1838, and 1839. It has been fifty years and upwards since that time, but the
624 head leaders of the church when I came there—Joseph Smith, Hyrum Smith, Lyman Wight, and Sidney Rigdon, were all in Richmond, Ray county, when I came to Caldwell county; that was in 1838. I was down there near the line of Caldwell county in the fall of 1838, and of course I heard a good deal while I was there. Joseph Smith and those other parties I named were in Richmond, in jail. I do not recall the names of any other Mormons who were in jail there; and what makes me recollect so well about that is, because they took a change of venue from this State to Illinois, and the Sheriff of Davies county was to take them there.

I went up to Haun's mill the first day of February, 1839. I took possession of the mill with my nephew. There were two or three
625 wounded men there at that time, pretty badly wounded. I knew the old gentleman Rathbun, there; the father of this one who appeared here as a witness. I knew the one who was here as a witness when he was there. He remained there with his mother in our neighborhood for some time; I cannot say how long. I think I saw him in the spring of 1839 at my house. I know his mother was there, and I believe he was. Yes sir, I recollect now of his being there, and he was lame at that time. I was in Far West in May after the Mormons left, at the time that the first Court was held in that county.

I was there at the first Circuit Court that was held in that county
626 after the Mormons gave up the possession; but there were lots of Mormons there at that time but they had promised to leave and give up their possession to the county. The court was held at Far West. The Court was held in a frame building; there was no courthouse.

REDIRECT EXAMINATION.

Yes, sir, I owned real estate in Caldwell county, about nine hundred acres at one time. I know of a boy that was shot during these troubles there at Haun's mill, in a blacksmith shop, and the man that did the deed stood on the ground the next summer and said: "I stood right here Charley, and shot that boy under the bellows right there, for the boy run up under the bellows for protection." And that is where he shot him. That was in 1839, along in the summer.

The man was boasting of the shooting, that I took him by the

shoulder, and shook him and said: "Bill Runnels, never tell that again in the world." I said "be ashamed of it," and he said "Knits make lice," and that was all the reply he made to what I said to him.

I might know the name of the boy now if I heard it. It was Bill Runnels who told me he shot the boy, and he lived in Caldwell county.

There was another man I was acquainted with who was in that fight, for he shot a man by the name of Lewis, across the creek on top of the hill; and he was there the next summer after the fight, and walked out on top of the hill and showed me where he shot the
627 man, where he stood when he fired the shot, and where the man was that he shot.

He shot this man Lewis from the fence on the other side of the creek, and two years afterwards his remains were taken out of the field and buried, for he was not put in the well with the rest of them. I was not there when the body was taken up, but I was there after it was taken up and in a box in the house; and I examined it myself, and the size of the ball that he shot him with was the same as the size of the ball that the man told me he shot him with, and the hole was right through both blades of the shoulder. I saw that with my own eyes; and this man told me that he shot him. There is no hearsay about that, for that is something I saw myself.

Neither of these men were ever indicted or brought to justice for shooting any of these men. They are dead now, but they were never brought to justice for what they did, unless they have been since they died. One of them lived near Utica, and the other lived in the northeastern part of our county.

What I know about these people being thrown in the well when they were killed: There can be no manner of doubt about it; they were put in the well, for the next spring when it thawed out it stunk like an old dead horse. It was a twelve-foot well and eighteen of
628 these Mormons were put in there. Afterwards I helped fill the well up. I call it the grave too. It smelt so bad and annoyed me so much, for it was within ten steps of my door. It was so bad that I had to fill it up. Yes sir, there were eighteen people in that well.

There were a good many people killed there at Haun's Mill, but they were not all put into that well. This man Lewis was not put in the well that I told you about; all the rest of them were put in there. I was well acquainted with Mr. McBride's family; he was the gentleman who was cut with the corn knife. A man from Davies county by the name of Rogers,—he belonged to that company that came there to fight the Mormons,—and he cut Mr. McBride, who was an old gentleman, with a piece of a scythe or corn knife,—cut him all to pieces with it, and cut his head off.

I got personally acquainted with his family afterwards, and bought what they had when they started away. The body of this man McBride that he chopped up, was put in that well.

MRS. MARY EATON, of lawful age, being produced, sworn, and examined on the part of the Plaintiff, testified as follows:—

629 I live on the corner of Temple and Walnut streets in the city of Independence, Missouri; have lived here fifteen years about.

Prior to coming here I lived in DeKalb county, Illinois. I think I lived in Caldwell county one time. I lived at DeWitt, in Caldwell county; I staid there for awhile, then I was in Far West, lived there some time, I think that was in 1838.

The occasion of going to Far West: It was designed to settle there; we went there with the design of settling and residing there permanently. We did not live right in the town at Far West in 1838; we lived about five miles from there I think. I think we came there in April, 1838, and located the place; but I think we moved there in
630 November. I was twenty-one years old at that time I think.

We left the place where we lived, five miles from Far West, because a party of men came to our house on horseback; they came along-side of our yard, told us we must leave there, or we would smell thunder and lightning. Then they asked for a drink of water, and my mother got them a drink, and they said they wanted to drive us into Far West. And they said they would give us hell, and we waited until it was a little dark, and then we started for Far West.

They did not attempt anything else while we were there, only they inquired if we had any arms in the house, and we told them that we did not; and they made some remark that Mormons were liars, or something like that, and not to be believed; and my father said for them to go in and search the house and see if there were any arms there.

Some of these men were dressed in what seemed to be a coat made of a white blanket; it was the style of the country at that time to have coats made of white blankets, for the country was a new country, and that kind of material was the easiest obtained. It was a custom at that time to wear a leather belt, and when you saw a man at that time the chances were that you would see his bowie knife stuck in it, attached to the belt with a scabbard. I think some of these men had these knives. They went away as they came imitating the barking of a dog as nearly as they could do so.

We went to Far West as they ordered us to do. After we got to Far West they surrounded us. There were men all around, riding over the prairies about Far West,—the country was literally black with them, and they demanded that the Latter Day Saints surrender, and that they stack their arms; and they did it.

631 After that we left Far West, and went back to the place about five miles south of Far West. It must have been three or four days before we returned to Far West. They took away what they termed "the authorities" of the church. They took them away from the city, and then they gave us permission to go back to our homes again.

The conditions attached to that permission to return home, were, to leave the country in the spring, and never attempt to put a plow in the ground again, but to leave in the spring; and that is what we agreed to do, and that is what we did. The orders were to leave the country in the spring, and that is what we did. It was the order of General Clarke or the generals that were there, that we should leave the country in the spring, and not to return to it any more.

I do not think there were any people who belonged to the church that were given permission to stay; I think they were all ordered to leave. The common conversation was that they all had to leave and none should put a plow in the ground in the spring. They were not to cultivate their farms or think of staying there. They all prepared to leave the county, and I think the State. I do not know what day in the month we left, but it was sometime in the month of April. We waited until the grass was up pretty well, so that we could feed our teams. I was acquainted afterwards with a man by
632 the name of Granville Hedrick; became acquainted with him in Illinois; knew him here in Independence; heard him speak several times. He preached several times in my house; could not tell how many times he did preach there. I have seen the book marked Exhibit W, before; I have seen it frequently; it is one of Granville Hedrick's productions, the same Granville Hedrick that used to speak in my house. I never heard of any other Granville Hedrick. There was no dispute amongst his people there, but what he was the author of this book. My husband owned a book like Exhibit W, and of course we had it in the house. The husband I refer to, is Mr. Eaton; he belonged to the Hedrickite Church, and had one of these books; had more than one,—had a number of them. This Granville Hedrick that preached at my house on these occasions was the founder of the Hedrickite Church, or the leader of it at that time, and it was so understood in all the papers and books published at that time.

CROSS-EXAMINATION.

By the Hedrickite Church I mean the church that Granville Hedrick was the leader of; that was the church, and it was called *Hedrickite* because he was the leader and President of it. He was the President of the Hedrickite Church at that time. Well, they had a name besides *Hedrickite;* they were commonly understood by that name; that is the name they commonly went by. They did not to my knowledge belong to the Reorganized Church of Jesus Christ of Latter Day Saints; they worshiped at first one place then another. They came frequently to my place, and they have frequently held
633 their conferences at my house. They did not always worship in my house, but did it in other houses also, but most of the time they came to my house. They did not have a place of worship afterwards, except to private houses among others, and except the little church they have lately built. I first knew Granville Hedrick as a leader in the church in 1876; it was the centennial year, but he was

not an elder in the church when we first went to Illinois. I saw him there then, and he was not a leader in the church then; but when I came to Independence here, I became acquainted with him. I came here in 1876, to live. There has been a church of that kind ever since I came here, but they do not meet, they did not have meetings when I first came here, regularly; I think they had meetings once in every two weeks when I first came here.

I cannot tell now who all were members of that organization, but then there was Adna Haldeman and his family, his wife, and I think two sons; I think they belonged to that organization. And there was Richard Hill, who lives here at Independence, now. My husband also belonged to it when I first came here; I do not know whether he joined when it was first organized or not, but he be-
634 longed to it when I first came here in 1876. I married Mr. Eaton in DeKalb county, Illinois, and came here with him soon afterwards. George Frisbee belonged to it then, and his wife belonged to it also. Daniel Border and I think Elder Montgomery; these were parties who were members away back of that time, some of them are not members now, several of them have left, I think Daniel Border still belongs, but his wife has left the church. My husband is not living at the present time; he died in 1880; was a member at the time he died. I have heard that a great number of them have left the church, but I do not know it of my own knowledge. I know some that are out of it and some that are in it, but I do not know the number of each decidedly.

I left Caldwell county in the spring of 1839. I think it was in 1838 that we were surrounded there at Far West. They took off some of
635 the people at that time as prisoners. The people who surrounded us took them off; they took them away and put them in jail as I understood. They took Joseph Smith, Ebenezer Page, Alexander McRae; I cannot tell the names of all, but those were some of them. I knew all the parties.

In 1839 I first went to Nauvoo, and in 1840, lived there. I taught school six miles out in the country, at Golden Point, six miles west of Nauvoo; went to meeting frequently at Nauvoo, but I did not live there. I belonged to the church there; I was married while I lived there to John E. Page; did not live in Nauvoo during that time, but I was frequently there attending meetings and such things. I lived in Nauvoo all together, I guess, about two months, and in the neighborhood about six months teaching school. I was there on two different occasions, I went from Nauvoo to Golden Point to teach school; the second time I was there was in 1845 or 1846; I left there the second time in 1846, and in 1876 I left Illinois.

I recollect the time Joseph Smith was killed; I was in the city of Pittsburg, Pennsylvania. I knew Joseph Smith and conversed with him frequently during his lifetime; knew his wife, and have been at their house. I think the last time I saw him was in 1840, and if I am
636 not mistaken, it was in the spring of the year, just before I left for

Pittsburg, but I cannot state any time positively. I was a member of the church in Nauvoo; became a member in 1836, joined the church in 1836, in Canada, in what was then called Upper Canada, and have always belonged to the church since that time; I joined the Church of Jesus Christ of Latter Day Saints, I think that was what it was called then. That was the 8th day of October, 1836,
637 that I was baptized. I believe I knew all of the Twelve in Nauvoo, every one of them. I was only slightly acquainted with Parley Pratt, but I have seen the others frequently. My husband was one of the Twelve at that time. He was a member of the old church before it was rejected, and went to Salt Lake.

No, sir, I did not say it was necessary for us to rejoin the church at Nauvoo, the church moved as a body from Far West to Nauvoo; there may have been a few that remained, but the church as a body was ordered to leave. After we joined the church in the first instance and were baptized, there was no reason to rejoin. We always belonged to the true church, and do to this day; that is the way it is, and if we rejected the authority of some of the assumed leaders and chose to go by ourselves, that did not make any difference, for we would still belong to the church.

This church that was at Nauvoo, was the same church as at Far West, and the fact of its removal did not make any difference; that is the way we look at it. Part of the members of the church went off from Nauvoo to Salt Lake, and a very great many of them did not go there. One of the Twelve was killed in St. Louis, and some others of the Twelve I know did not go to Salt Lake City under the leadership of Brigham Young. My husband did not go, for one. William Smith did not go; I know he did not go, do not think anything about it, and Lyman Wight did not go,

The church did not have any head at that time, any more than certain parties called themselves the head. I refer by "they," to the Twelve, or what was left of them. There was quite a number of members of the church who did not go west with Brigham Young; they were not ordered to go, and they stayed in this country.

638 I cannot state what proportion of the membership went to Salt Lake. I cannot state the year that we went to DeKalb county. After that we went to Wisconsin, and there were some members of the church there, but I was not identified with them as I know of, only met with them sometimes.

I met Granville Hedrick first in Illinois, in DeKalb township; the town was called DeKalb. He came there to get my husband, Mr. Page, to come to Bloomington, and he persuaded him to come and preach there. Mr. Page went and stayed some time, but I did not go with him. I first knew the church called "Hedrickites," in Independence, Missouri. I never saw but two of them until I came here, and that was Granville Hedrick and Jedediah Owens. I think Mr. Page belonged to the Hedrickites, but I was not present when he joined. I

do not know anything of their organization; do not know anything about it only from common talk.

REDIRECT EXAMINATION.

640 I am a member of the Reorganized Church of Jesus Christ of Latter Day Saints. It is the same church organization in faith and doctrine as the one I originally united with in 1836. I do not know of any difference. When I speak of the "Hedrickites," I mean these people here in the city of Independence, who call themselves the "Church of Christ," I suppose that is the name they call themselves.

RECROSS-EXAMINATION.

The Hedrickite Church is not the same church as the Reorganized Church of Jesus Christ of Latter Day Saints. I never belonged to the Hedrickite Church; never had any leaning that way, and I never had any desire to belong to it. As I understand it, my husband, Mr. Page, belonged to it. They came there to where we were living in DeKalb and persuaded him to go to Bloomington where they had an organization, but I do not know anything about it only what I heard. John E. Page, my husband, died in 1848, and I was married to Mr. Eaton in 1876, and Mr. Eaton belonged to the Hedrickite Church; that was the first acquaintance I had with the church,—after I married Mr. Eaton. The leader of the church was Granville Hedrick; he was the one that used to come to my house to meeting. I never knew any other Granville Hedrick; it was understood that he was the leader. I was not acquainted with John H. Hedrick; at the time there was a man by the name of George Hedrick, but I was not acquainted with him.

By endowments in the church I understand as endowments in the Bible is spoken of endowment of the Holy Spirit. I never knew of any endowments in Nauvoo; there might have been, but I never knew of any real endowments there. I do not know as endowments are anything that belong to the church in any way, and I never went through all their endowments there at Nauvoo. My husband, from what little he saw of it, said it was of the Devil, and so we rejected it. I never went through all of it, and that was after Joseph Smith died. I have never seen anything in the Reorganized Church like endowments that I saw in Nauvoo. I never saw anything other than the endowments spoken of in the Bible; we do not countenance anything else in any shape or manner, and we do not permit anything else there. I first heard some talk of the plurality of wives after Joseph Smith was killed. There was some talk among the people, but I never heard anything about it while Joseph Smith lived. I was at several conferences at Nauvoo, I was present when William Smith preached. I have heard him preach there in Nauvoo; I never heard William Smith preach plurality of wives doctrine, at any time or place.

REDIRECT EXAMINATION.

Yes, sir, I was asked on my cross-examination about endowments at Nauvoo; that was in 1846,—I think it was in 1846. I never knew

anything of that kind until I saw it practiced there in 1846; it was in 1846 that I first knew it and it was never practiced in the church before that.

RECROSS-EXAMINATION.

I said in my cross-examination a while ago, that I had never been through all the endowments, I did not say anything about endowments in 1840, for there was nothing of the kind in 1840; I told you that I never received them all; there was nothing of the kind in 1840.

There was nothing of the kind in the church in 1840, but in 1846 there was a kind of sham curiosity of an endowment there, but I said that I did not go through it all. I never saw or heard of it in the church at Nauvoo, or anywhere else until after the time of Joseph Smith's death, and the Twelve were ruling there.

I told you that my husband said all that endowment business was nonsense and of the Devil, and so we never talked about it or cared about it, and did not believe in it at all. My husband and I left Nauvoo, for the purpose of getting away from such a corrupt church.

We saw that the church had fallen and was corrupted, and so we decided not to stay.

There was no trouble between my husband and the church, on the contrary they did not like to have him leave them, and would liked to have had him go west with them. My husband publicly denounced them for teaching falsehoods. Plaintiffs introduce from Exhibit W, beginning with the word *let*, from the third line on page 90 down to and including the word *accomplished*, from the bottom of page as follows:—

Let those who wish to do right, and serve God according to the gospel plan of salvation, call their solemn assemblies, and in council determine to stand and build upon the things given in the beginning to this church, as is contained in the BIBLE, BOOK OF MORMON, and BOOK OF DOCTRINE AND COVENANTS, WHICH WERE GIVEN FOR THE FOUNDATION AND STANDARD OF FAITH AND DOCTRINE FOR THE CHURCH OF JESUS CHRIST, IN WHICH ALL THINGS ARE GIVEN THAT ARE NECESSARY TO BUILD UP THE CHURCH OF JESUS CHRIST OF LATTER DAY SAINTS, AND REGULATE ALL THE AFFAIRS OF THE SAME.

In the Book of Doctrine and Covenants is the order of the priesthood to the Church of Jesus Christ, as given through Joseph Smith, from heaven by the Lord himself, and that, too, for the last time. The Book of Doctrine and Covenants sets forth the order of the priesthood to the church, and points out the different offices, and also the character and qualifications of those upon whom the different offices shall be conferred, and likewise defines the duty of all the several officers, and also of the members.

It also contains the covenants and church articles, and links together the BIBLE AND BOOK OF MORMON, which contains the fulness of the everlasting gospel of Jesus Christ, the Son of the only true and living God.

These three books then were given to the Church of Jesus Christ (in these last days which was organized on the 6th day of April, 1830, by Joseph Smith) for the foundation and standard of faith and doctrine for the people of God, to build themselves up in the most holy faith, once delivered to the saints.

This church organization was founded on the principles of the doctrine as contained in these three books on inspiration, and that the things written in those

inspired volumes, when rightly observed, are wholly sufficient to govern and regulate all church matters and affairs both great and small, with perfect accuracy, and that the church must come to this standard before we can be delivered from the apostasy, and set aright, and become acceptable before the Lord.

Now if anyone should desire further proof in regard to the things given for a standard and foundation of this church, just turn and read the 28th to 33d pages in this work. There you will find proof positive, showing plainly that the doctrine contained in those three inspired volumes, were given to this church for a code of Laws, to govern and regulate all matters, and affairs in this church whatever, and to be a standard for the church of Jesus Christ of Latter Day Saints. Hence brethren, I presume we have it plainly before us, relative to the subject of the foundation of this church, and I have also shown that the spiritual wife system is a departure from the foundation and standard of faith and doctrine upon which this church was first founded and built up in: also that this departure is a heresy, and that those who are engaged in the practice of polygamy are in an awful wicked state of apostasy.

That the principal authorities of this church are in a state of apostasy, will appear plain to the mind of every man and woman who is convinced that the doctrine of polygamy is false and desperately wicked; and it must appear plain to the mind of every candid man and woman, that the church can never be reëstablished and built up in gospel purity while it is under the direction and influence of these apostate authorities.

In this view of the subject, no doubt but that we all agree. But, says you, seeing this people are led off into abominable whoredoms, under the direction of men of talent and high authority in this church, and are still persisting in their wicked practices, seeing this state of things has unfortunately befallen the church, what shall we do, and how shall we behold the church set once more in its primitive order, and if we draw the lines of separation, how shall we build up without authority? All such questions have been presented by many, and not being able to solve such imaginary difficulties, they have suffered themselves to be led astray with the idea that some great man, with great and extraordinary claims of authority, will yet arise and set this church in order, and during this mis-guided state of mind, and anxious expectations of their hope to see some great man appear, and thus unguardedly they subject themselves to every imposition that seems to be presented, according to their imaginary views, having lost sight of the true order of things as is pointed out in the Book of Covenants, which if read, and understood would be a sufficient detecter in each and every case that might arise.

The spiritual wife system has been proved to be false, and the things constituting the foundations of this church have been plainly illustrated, and also that many of the authorities of this church are in an awful state of apostasy, and that the necessity of the times calls loudly for a reform in this church.

This, then, brings me to the subject of authority or priesthood, to show who has the legal right to put forth their hands in renovating and building up the church in the gospel purity, as it was given to her in the beginning for a standard of doctrine and faith, and also the order in which it shall be accomplished.

JOHN T. CRISP, of lawful age, being produced, sworn, and examined on the part of the Plaintiff, testified as follows:—

I was born in the State of Missouri, about fifty-four years ago. There has been about twelve or fifteen years of my life that I have not been a resident of Missouri, but aside from that time I have lived in that State.

I was born in Cass county; reside here in Independence, Missouri; lived here since 1865; took part in the war from 1861 to 1865.

Q.—What information, if any, have you regarding the feeling against the Mormon people, or the Latter Day Saints in this part of the country, according to your knowledge of it, if you have any with reference to their returning to this part of the country.

A.—I would like to answer that question in my own way if you are not very particular. I was a little boy at the time I first heard this Mormon question discussed. This man, Governor Boggs, and my people were related; that is, his son married a cousin of mine, and the families, the old Hicklin family and my family, were very intimately connected with the family, and it was more discussed in my family circle than it would otherwise have been. I remember that I talked with Governor Boggs about it in California, when he was quite an old man.

Now I heard, I suppose, what everybody in the country heard about the troubles with the Mormons in this section of country, and there can be no doubt but that there was a very great and strong prejudice against the Mormons in this country; but it gradually died away, until the time of the war, and during that time I heard nothing about it and had lost interest in it, if I ever had any interest particularly.

I was kept quite busy getting out of the way during the war; that and other matters absorbed about all my attention. After the war I remember very distinctly, as every other resident does, when it was said that the Mormons were coming back to occupy their lands again. There was a good deal of excitement over the report, and a good deal of talk about it going on, and some people expressed themselves pretty freely as being opposed to it.

I remember that I heard it said that they were returning; I heard a good many things said about it; I suppose I have heard almost everything. I would not be able to state what I heard a good many people say about it, for I heard so much.

One thing I remember that was said, that the Mormons were a very persistent people and evidently believed in their doctrines. Some people expressed a desire that they would all come and get here quick, for we considered that whatever their character might be it was impossible to damage society here, and that was my opinion at the time, for this was a pretty bad society here right after the war, and we considered that about any class of people that would come in, whatever their prior reputation or character may have been, it would have been an improvement on the state of society then existing.

We practically had no interest in the community as about all my people including myself were disfranchised right after the war. We were not in it to any alarming extent; they thought our past records were such as to make us dangerous members of society. We were not in it and were not very particular about who came here. We

did not care very much whether the Mormons came here and took charge of it or not.

I would like for one thing to be distinctly understood, and it can go on record, too, if desirable, that I do not think that any class of citizens that came here, whatever their reputation might be, that I ever heard of, could have damaged the society that existed here right after the war; and that was about the time that I first heard rumors that the Mormons were returning here.

I do not say that every man that was here was of that character; there were a few good citizens at that time, men of honor and respect; but on the other hand there was a great many, and the worst you could say about them would be too good.

There was a great deal of bad feeling against the Mormons in 1865. Before the war, was the time that I heard what had been done here in the thirties, and I know that up to the time of the war there was a very deep-seated and almost universal feeling of hostility against these people, which afterwards was in a degree swallowed up in the war.

Now, after the war, as I have stated, we were in a condition not to have much to do with resistance and rebellion; we might have had a great many opinions on one thing and another, but we were very chary about expressing them, and when I did express anything, I always took care not to express my real convictions in regard to anything, for I became quite an adept in regard to that.

When the Mormons began to return in numbers, that was about fifteen years ago or so, the feeling against them depended as to whom you met, and whom you conversed with. At that time political questions monopolized the day, and people were only too glad to find a man with any kind of religion who believed in it and who lived up to it, and a great many people who professed religion at that time left and went to a section where people could live in peace.

All religions were popular here at that time; but in connection with the return of the Mormons, some people would say that they were really a branch of the church at Utah, and were practicing polygamy. I have heard that statement, but I cannot tell you who made it.

Yes, sir, I have heard since the war people say that they ought to be kept out of here; I suppose I have heard it a thousand times. I have heard it frequently, very frequently, that they ought not to be permitted to come here; I cannot say by whom that was said. This is a very peculiar line of inquiry, and I do not know how to answer that question, for I could answer it many different ways. I am under oath here, and consequently particular about what I say.

I have heard so much from my earliest days down to the present time, that it is difficult to say what I have heard except in a general way, and it would be impossible for me to state from whom I heard these things.

Well, Colonel Southern, you have heard and I have heard, and you know as well as I know, that there was a great deal of bad blood in this community just after the war, and you know that was a period of profound dissimulation, and you could not always place much reliance upon what a man's belief or opinion was, from what he said. It was a time when it was the opinion of almost every man who had a grain of prudence in his composition, that it would be better for him if he kept his real sentiments concealed, and did not express them. I felt that way, I know, and probably you did also, for we both had the same reason to do so.

The fact is that I thought I discovered with some people, (and a great many people in proportion to the number in the community,) who entertained opinions and animosities and prejudices against these people, which under circumstances dissimiliar from those which followed the war, would have rendered it impossible for these people to have come into this community and lived in peace and safety, and these facts must be as well known to you as to myself. I did not participate in any such feelings as that, and there were a great many people here who did not, still there were a great many people who, if it had not been for the experiences they had passed through in the war, would not have permitted these people to return here.

All I know about the feeling of the people of Jackson county against the Mormons since the war is what I have heard from expressions made by the inhabitants, and not from any overt acts.

The condition that existed in Utah, from 1850 up to 1860, was supposed to exist here at Independence, at the time the Mormons were here, and that was the primary cause of their expulsion from this locality. That was the opinion that was universally held in this community. My understanding is that the hostility, as you express it, was against all the Mormons, as they were called, without any reference to minor details as to the cause.

It seemed to be simply a deep-seated and very general hostility founded on deep-seated principles, and what the causes were in detail I do not know. I remember more particularly between 1850 and 1860; I had grown up then, and remember more particularly what occurred than I do what occurred before that time.

I attended college in the southern part of this county, and during that time I talked with a great many people who had participated in the Mormon wars, and I had better opportunities for forming opinions than now. I remember that at that time the sentiment was intensely hostile against the Mormons; of course there was a decade when it died out, so to speak; that is, we would have one wave of friendship and then another would follow and swallow that in one of indignation.

It seemed to be the general impression that the Mormons intended to come back to this country and take it, for they had established their headquarters in Utah, and from there sent out their mission-

aries and made their converts and recruits, and sent them to Utah, and in time they were to return here and possess this country, it did not make any difference as to what it cost to take it; that seemed to be the general impression, and of course engendered animosity. They were to come from every direction, that was the general belief, that they had their headquarters in Utah, and were recruiting armies to come back and take this country again.

Before the war I did not know much about many people. My conceptions were of Missourians and other Southern people. Yankees were not allowed to come into this country before the war by anyone who knew anything about it, nor these Mormon people either; and all these people who were here and supposed to be Abolitionists and Northern people kept that matter a secret and did not tell many people about it. They kept it a profound secret, for Northern people at that time were not in much better favor than the Mormons were.

MARTHA A. HALL, of lawful age, being produced, sworn, and examined on the part of the Plaintiff, testified as follows:—

My name is Martha A. Hall; I reside three miles and a half southeast of Independence; have been living there off and on for some sixty-one years, but I have not made it my permanent home all the time. From 1866 to 1890 I was living out here about a mile from town. I have lived in this county all my life, in the vicinity of Independence, ever since I was born, and I was born right here in 1829; am sixty-one years old, past.

My parents lived here at the time of the expulsion of the Latter Day Saints in 1833, and I was here at that time. I have a recollection about the people taking a very active part in expelling the Latter Day Saints from Jackson county; my people took a very active part. My relatives, my father and brother. I know my parents and relatives took a very active part in expelling the Saints from Independence, and at that time there was no thought that they would ever return again.

I have a distinct recollection of the expulsion of the Saints from this county, and I heard my parents speak of it for a great many years afterwards; just as long as they lived I occasionally heard them speak of it. My mother has been dead about three years, and my father sixteen years. I remember that they would call them liars, and thieves, and cut throats and about everything they could think of that was bad. They said that if they did come back they ought to be everyone of them killed,—that the citizens ought to raise up and mob them out of the country. That was the general talk of the community so far as I knew. That was about the way they would speak of them, and I never heard anyone speak friendly of them until about the time that I commenced to investigate their doctrine, and then I heard some good things, or rather I found it out myself. That was about twelve years ago. My attention was first

attracted to it at the time that one of them came out there in our neighborhood to preach; we met there several times to hear him preach. He preached in the schoolhouse, but finally they locked the schoolhouse and said they were not going to allow him to preach there. Up to this time they had been against them, my own relatives amongst them.

In all the talk I heard there, and the people that I have heard talk (and I heard almost everybody there when they lived there at that time), I never heard anyone express a friedly word for "the Mormons," as they called them. I remember a good deal about the occurrences that happened in 1838, in Caldwell county. I remember there were a lot of men went under the command of Captain Sanders to expel the Latter Day Saints from there. I remember they said they would have to follow them up and kill the last one of them. There was a company went from Independence, here to expel the Saints from Caldwell county.

There are only two men that I know of now who are living who went with them at that time, and one of them is Alexander Harris, and the other is Samuel Luttrel. Some of my relatives were with them,—my father and one of his brothers-in-law, and one of his cousins by the name of Pitcher.

I heard my father state a good deal about what happened. I remember they were driven away and not allowed to come back again. That was common conversation in the country, and there were a few of the Latter Day Saints who wanted to stay for a while and wind up their business, but they would not permit it. That is what they said when they came back, that they drove them right out.

CROSS-EXAMINATION.

I belong to the Latter Day Saints Church at the present time; became a member of that church about nine years ago, about the 1st of September. Yes, sir, my friends were opposed to my becoming a member of the Latter Day Saints Church. I never belonged to any church in my life until I joined that.

My friends and relatives belonged to churches of different denominations. The Latter Day Saints were not popular in that neighborhood, and it showed that they had the same spirit of indignation against them that they had in the past.

Plaintiff offers in evidence the title page of the new Revised and Annotated Code of Iowa, published at Des Moines, Iowa, and also the certificate of the Secretary of State, on page 3 and chapter 196, of the laws of the State of Iowa, being an act relating to evidence:—

Section 1. Be it enacted by the General Assembly of the State of Iowa: That the revised and annotated Code of Iowa prepared by William E. Miller, and to be published by Mills & Company, of Des Moines, Iowa, when so published, and certified by the Secretary of State to embrace the Code of Iowa of 1873, as amended by subsequent statutes, and the general and permanent statutes of the fifteenth,

sixteenth, seventeenth, and eighteenth general assemblies, shall be received in all Courts in this State, with like effect as if published by the State.

Approved March 27, 1880.

CERTIFICATE OF THE SECRETARY OF STATE.

STATE OF IOWA,
Office of Secretary of State,
Des Moines, May 28, 1880.

I, J. A. T. Hull, Secretary of State of the State of Iowa, hereby certify that I have examined the "Revised and Annotated Code of Iowa," prepared by Wm. E. Miller, and published by Mills & Company, of Des Moines, Iowa, and find that it embraces the Code of 1873 as amended by subsequent statutes, and the general and permanent statutes of the fifteenth, sixteenth, seventeenth and eighteenth General Assemblies.

In testimony whereof, I have hereunto set my hand, and affixed the Great Seal of the State, this twenty- eighth day of May, A. D. 1880.

[SEAL.] J. A. T. HULL,
Secretary of State.

Also offer in evidence chapter two of title nine on corporations on page 275, as follows:—

CHAPTER 2.

CORPORATIONS OTHER THAN THOSE FOR PECUNIARY BENEFIT.

Section 1091. Associations for the establishment of seminaries of learning, churches, lyceums, libraries, lodges of Odd Fellows or Masons, and other institutions of a benevolent or charitable character; agricultural societies, subordinate granges of the patrons of husbandry, and associations for the detection of horse thieves, and of other depredators upon property, may become incorporated in the manner directed in the preceding chapter, so far as applicable, and shall thereby become vested with all the powers and privileges, and subject to all the liabilities provided by that chapter, except as herein modified.

Sec. 1092. Their articles of incorporation shall be recorded by the recorder of deeds of a county where the principal place of business is kept only; but a newspaper publication is not requisite.

Sec. 1093. No dividend, nor distribution of property among the stockholders shall be made until the dissolution of the corporation.

Sec. 1094. Corporations of an academical character are invested with authority to confer the degrees usually conferred by such institutions.

CHARITABLE, SCIENTIFIC, AND RELIGIOUS ASSOCIATIONS.

Sec. 1095. Any three or more persons of full age, citizens of the United States, a majority of whom shall be citizens of this State, who desire to associate themselves for benevolent, charitable, scientific, religious, or missionary purposes, may make, sign, and acknowledge before any officer authorized to take the acknowledgements of deeds in this State, and have recorded in the office of the recorder of the county in which the business of such society is to be conducted, a certificate in writing, in which shall be stated the name or title by which such society shall be known, the particular business and objects of such society, the number of trustees, directors, or managers to conduct the same, and the name of the trustees, directors, or managers of such society for the first year of its existence.

Sec. 1096. Upon filing for record the certificate as aforesaid, the persons who shall have signed and acknowledged such certificate, and their associates and successors, shall, by virtue hereof, be a body politic and corporate by the name stated in such certificate, and, by that, they and their successors shall and may have succession, and shall be persons capable of suing and being sued, and may have and use a common seal, which they may alter or change at pleasure; and they and their successors, by their corporate name, shall be capable of taking, receiving, purchasing, and holding real and personal estate; and of making by-laws for the management of its affairs, not inconsistent with law.

Sec. 1097. The society so incorporated, may annually, or oftener, elect from its members its trustees, directors or managers at such time and place, and in such manner as may be specified in its by-laws, who shall have the control and management of the affairs and funds of the society, a majority of whom shall be a quorum for the transaction of business; and whenever any vacancy shall happen among such trustees, directors, or managers, by death, resignation, or neglect to serve, such vacancy shall be filled in such manner as shall be provided by the by-laws of such society. When the body corporate consists of the trustees, directors, or managers of any benevolent, charitable, literary, scientific, religious, or missionary institution, which is or may be established in this State, and which is or may be under the patronage, control, direction, or supervision of any synod, conference, association, or other ecclesiastical body in such State, established agreeably to the laws thereof, such ecclesiastical body may nominate and appoint such trustees, directors, or managers, according to usages of the appointing body, and may fill any vacancy which may occur among such trustees, directors, or managers; and when any such institution may be under the patronage, control, direction, or supervision of two or more such synods, conferences, associations, or other ecclesiastical bodies, such bodies may severally nominate and appoint such proportion of such trustees, directors, or managers, as shall be agreed upon by those bodies immediately concerned. And any vacancy occurring among such appointees last named, shall be filled by the synod, conference, association, or body having appointed the last incumbent.

Sec. 1098. Any corporation in this State of an academical character, the memberships of which shall consist of lay members, and pastors of churches, delegates to any synod, conference, or council, holding its annual meetings alternately in this and one or more adjoining States, may hold its annual meetings for the election of officers and the transaction of business in any adjoining State to this, at such place therein as the said synod, conference, or council shall hold its annnal meeting; and the election so held, and business so transacted, shall be as legal and binding as if held and transacted at the place of business of the corporation in this State.

Sec. 1099. In case an election of trustees, directors, or managers, shall not be made on the day designated by the by-laws, said society for that cause shall not be dissolved, but such election may take place on any other day directed by such by-laws.

Sec. 1100. The provisions of this chapter, shall not extend or apply to any association, or individual who shall, in the certificate filed with the recorder, use or specify a name or style the same as that of any previously existing incorporated society in the county.

Sec. 1101. Any corporation formed under this chapter shall be capable of taking, holding, or receiving property by virtue of any devise or bequest contained in any last will or testament of any person whatsoever; but no person leaving a wife, child, or parent, shall devise or bequeath to such institution or corporation more than one fourth of his estate after the payment of his debts, and such devise or bequest shall be valid only to the extent of such one fourth.

Sec. 1102. The trustees, directors, or stockholders of any existing benevolent, charitable, scientific, missionary, or religious corporation may, by conforming to the requirements of section 1095 of this chapter, reincorporate themselves, or continue their existing corporate powers, and all the property and effects of such existing corporation shall vest in and belong to the corporation so reincorporated or continued.

Also offer in evidence chapter forty of the laws of 1874, as follows:—

CORPORATIONS NOT FOR PECUNIARY PROFIT.

An act to amend chapter 2, title IX, of the code of 1873, to authorize corporations other than those for pecuniary profit to change their name and to amend articles of incorporation.

Sec. 1. Be it enacted by the General Assembly of the State of Iowa, that title IX, chapter 2, of the code of 1873, be amended as follows:—

Any corporation other than those for pecuniary profit may change the corporate name thereof, or amend the articles of incorporation or the original certificate thereto, by a vote of the majority of the members or stockholders of the said corporation in such manner as may be provided by the articles of incorporation thereof.

Sec. 2. In case of the body corporate consisting of the trustees, directors, or managers of any benevolent, charitable, literary, scientific, religious, or missionary institution under the patronage of any synod, conference, association, or other ecclesiastical body in the State, or two or more of them, said amendment or change may originate with either of the said trustees, directors, or managers, or with either of the said patronizing bodies, but such change or amendment shall not be made without the vote of a majority of each of said trustees, directors, or managers, and of each of the said patronizing bodies, legally expressed and certified thereto by the secretary, clerk, or recording officer of such board of trustees, directors or managers, and of each of the patronizing bodies.

Sec. 3. The change or amendment of the articles of incorporation shall be recorded by the recorder of deeds as the original articles of incorporation are required to be, and the recorder shall make upon the margin of such record a reference to the book and page of the record of such original articles of incorporation; and from and after the date of such act of recording such change or amendment shall be in full force and effect as the original articles of incorporation so amended.

Sec. 4. The corporation by its new name or with such amended articles of incorporation or certificate, shall be entitled to all the rights, powers, immunities, and franchises that it possessed before such change or amendment, and shall be liable upon all contracts, obligations, liabilities entered into, incurred, or binding on such corporation by or under the old name or articles of incorporation to the same extent and manner as though no such change or amendment had been made.

Approved March 18, 1874.

The statutes of Iowa, above described, are marked "Exhibit X." Plaintiffs now offer "Exhibit Y," being the certificate of the Adjutant General of the State of Missouri, dated April 23, 1892, as follows:—

State of Missouri, Adjutant General's Office,
CITY OF JEFFERSON, April 23, 1892.

It is hereby certified that the order of Governor Boggs, dated October 27, 1838, expelling or banishing the Mormons from the State of Missouri, is not to be found among the records of this department.

J. A. WICKHAM, Adjutant General.

[Seal of Adjutant.]

Also "Exhibit Z," being the certificate of the Secretary of State of Missouri, with reference to the Judges of the Courts of Caldwell county, is as follows:—

State of Missouri, Department of State,
CITY OF JEFFERSON, April 19, 1892.

Dear Sir:—Replying to yours of the 18th inst.:—

1. I am unable to send you "a duly certified copy of the order of Gov. L. W. Boggs expelling the Mormons, Latter Day Saints, from Missouri," because no such order is on file, or of record in this department for 1838.

2. No record of that character is on file for either of the years 1833 or 1834, the records up to November, 1837, being destroyed by the fire that burned the capitol.

3. I send you a certified copy of the record of election and appointments of jus-

tices of the county court for Caldwell county for the years you request, the State's fee for which is $1.50, which is deducted from your money order, and balance ($1.50), returned herewith. Very respectfully,

A. A. LESUEUR, Secretary of State.

P. P. KELLEY, Esq.
Independence, Missouri.

COPY OF THE RECORD OF ELECTION OF JUSTICES.

"EXHIBIT 27."

668 James Allred, Arthur Morrison, Elias Higbee, appointed August 25, 1838, Justices of the County Court, elected August, 1838, left the county, being Mormons.

Samuel Bogart, (date of appointment) June 3, 1839, Justice of the County Court, appointed by Gov., vice, those last named until next general election, removed.

James Baxter and James M. Ramsey were appointed at the same time and in the same manner as Samuel Bogart, James Baxter resigned March, 1840, and James M. Ramsey resigned September, 1840.

Then appears the entry "Gov. until election."

Armistead Early, (date of appointment) March 16, 1840, Justice of the County Court, (term of office and how appointed) "Gov. until election" vice S. Bogart, rem.

David Hughes, (date of appointment) March 16, 1840, Justice of the County Court (term of office and how appointed) Gov. until election, vice J. M. Ramsey red. resigned September, 1840.

(Date of appointment). September 23, 1840,—

William Glenn (date of appointment) September 23, 1840, Justice of the County Court, app'td by Gov'r., vice James M. Ramsey, resigned.

William Glenn, (date of appointment) Nov'r. 11, 1840, Justice of the County Court, elected Aug., 1840, four years.

William Thomas, (date of appointment) Nov'r 11, 1840, Justice of the County Court, elected Aug., 1840, (refused to serve.) (Duplicate issued April 6, 1841, on certificate of loss.)

Francis McGuire, (date of appointment) Nov'r 11, 1840, Justice of the County Court, (Elected Aug., 1840, refused to serve) same further entry.

STATE OF MISSOURI. ss.

I, Alexander A. Lesueur, Secretary of State of the State of Missouri, hereby certify that the annexed pages, contain a full, true, and complete copy of the record of the appointment and election of Justices of the County Court of Caldwell county, from and including August 25, 1838, to November 11, 1840, inclusive, and of all entries thereto appertaining, as the same appear of record in Vol. 1, abstract of commissions on file as the law directs in this office.

In testimony whereof, I have hereunto set my hand, and affixed the Great Seal of the State of Missouri. Done at office in the city of Jefferson, this eighteenth day of April, A. D. 1892.

A. A. LESUEUR, Secretary of State.

[Seal of Missouri.]

Plaintiff offers title page of the History of Caldwell and Livingston Counties, Missouri, as follows:—

"History of Caldwell and Livingston Counties, Missouri, written and compiled from the most authentic official and private sources, including a history of their townships, towns, and villages, together with a condensed history of Missouri; a reliable and detailed history of Caldwell and Livingston counties, their pioneer record, resources, biographical sketches of prominent citizens; general and local statistics of great value; incidents and reminiscences. St. Louis; National Historical Company. 1886."

"EXHIBIT 26."

"Exhibit 26," page 140, the copy of the written speech by General Clarke delivered to the Mormons at Far West, Missouri, as follows:—

670 *Gentlemen:*—You whose names are not attached to this list of names, will now have the privilege of going to your fields to obtain corn for your families, wood, etc. Those that are now taken will go from thence to prison, be tried, and receive the due demerit of their crimes: but you are now at liberty, all but such charges as may be hereafter preferred against you. It now devolves upon you to fulfill the treaty that you have entered into, the leading items of which I now lay before you.

The first of these you have already complied with, which is, that you deliver up your leading men to be tried according to the law.

Second, that you deliver up your arms: this has been attended to.

The third, is that you sign over your properties to defray the expenses of the war; this you have also done.

Another thing yet remains for you to comply with, that is, that you leave the State forthwith: and whatever your feelings concerning this affair, whatever your innocence, it is nothing to me.

General Lucas, who is equal in authority with me, has made this treaty with you. I am determined to see it executed.

The orders of the Governor to me were, that you should be exterminated, and not allowed to continue in the State: and had your leaders not been given up and the treaty complied with before this, you and your families would have been destroyed, and your houses in ashes.

There is a discretionary power vested in my hands, which I shall try to exercise for a season. I do not say that you shall go now, but you must not think of staying here another season, or of putting in crops; for the moment you do, the citizens will be upon you. I am determined to see the Governor's message fulfilled, but shall not come upon you immediately.

Do not think that I shall act as I have done any more: but if I have to come again because the treaty which you have made here shall be broken, you need not expect any mercy, but extermination, for I am determined that the Governor's order shall be executed.

As for your leaders, do not once think, do not imagine for a moment, do not let it enter your minds, that they will be delivered, or that you will see their faces again: for their fate is fixed, their die is cast, their doom is sealed.

I am sorry, gentlemen, to see so great a number apparently intelligent men found in the situation that you are: and oh, that I could invoke the Spirit of the unknown God to rest upon you, and deliver you from that awful chain of superstition, and liberate you from those fetters of fanaticism with which you are bound.

I would advise you to scatter abroad, and never again organize with bishops, presidents, etc., lest you excite the jealousies of the people, and subject yourselves to the same calamities that have now come down upon you. You have always been the aggressors: you have brought upon yourselves these difficulties by being disaffected, and not being subject to rule, and my advice is, that you become as other citizens, lest by a recurrence of these events, you bring upon yourselves irretrievable ruin.

Plaintiff offers in evidence Exhibit 30, being a certified copy of the Articles of Incorporation under the laws of the State of Illinois.

Exhibit 30 is in words and figures as follows, to wit:—

Articles of Association and By-laws of the Reorganized Church of Latter Day Saints.

Filed for record February 5, A. D. 1873.

STATE OF ILLINOIS, } ss.
Kendall County. }

671 I, Isaac Cramer, do solemnly swear, that at a meeting of the members of the "Reorganized Church of Jesus Christ of Latter Day Saints," held at Plano, in the county of Kendall, and State of Illinois, on the 21st day of October, A. D. 1872, for that purpose, Israel L. Rogers, the presiding Bishop of said church, was appointed one of the two trustees to be appointed for said church, and that at a subsequent meeting held at the same place, February 3, 1873, Elijah Banta, councilor of said Bishop, was appointed as one, the other of the two trustees before named; according to the rules and usages of such church.

And said church adopted at said meeting held on said 21st day of October, A. D. 1872, as its corporate name, the following, viz., "The Reorganized Church of Jesus Christ of Latter Day Saints."

And that said church adopted as its articles of association, and by-laws (which are subject to amendment by a vote of two thirds majority of the members of said church present and voting at any regular conference) the following, viz.:—

Articles of Association adopted by the "Reorganized Church of Jesus Christ of Latter Day Saints," at a general meeting of the members of said church held at Plano, in the county of Kendall, in the State of Illinois, on the 21st day of October, A. D. 1872.

Article 1.—The name of this association and organization shall be "The Reorganized Church of Jesus Christ of Latter Day Saints," and shall be incorporated under the laws of Illinois, under and by that name. The church adheres to the doctrines and tenets of the original Church of Jesus Christ of Latter Day Saints as organized by Joseph Smith the Martyr, now deceased, on the sixth day of April, A. D. 1830, as the same has been reorganized by Joseph Smith, now of Plano, Illinois, with the advice and assistance of Jason W. Briggs, Zenas H. Gurley, Sr., William Marks, Sr., Israel L. Rogers, Isaac Sheen, and many others.

The church government consists, first, of a First Presidency, consisting of a President and two counselors.

2d.—A Quorum of the Twelve, (a traveling High Council.)

3d.—A Standing High Council of the Church, and at each "Stake," a similar subordinate Standing High Council, consisting of twelve chosen for that purpose.

4th.—A High Priest's Quorum.

5th.—One or more Quorums of Seventy, not exceeding seven.

6th.—Quorums of Elders.

7th.—Bishops, consisting of a Presiding Bishop, and associate, or local bishops, said bishops having temporal jurisdiction subject to the general direction of the church, and higher church authorities.

8th.—Quorums of Priests.

9th.—Quorums of Teachers.

10th.—Quorums of Deacons.

11th.—Until otherwise provided, the Reorganized Church at Plano, Illinois, shall be the principal or central church. All others shall be "stakes," or "branches," but all subject to the same church government subordinate to this organization, and constituting a part thereof.

A branch may be organized at any time or place by the concurrence of six or more residents members in good standing of said Reorganized Church, one of whom must be an Elder, Priest, Teacher, or Deacon. A stake is a large branch organized into a "stake," at the direction of a General Conference of the Church; and Plano, Kendall county, Illinois, shall be the principal place of business of said corporation, said Reorganized Church and its stakes and branches, are in all respects subject to the doctrines and tenets of said original, and reorganization in this article mentioned.

672 Article 2.—The Presiding Bishop and his counselors shall be the trustees of the church, and perform all the duties contemplated by an act entitled "an Act Concerning Corporations," approved April 18, 1872, and in force in Illinois, July

1, 1872, a majority of whom may perform any act under said law or contemplated by this organization.

Article 3.—This organization shall publish, print, circulate, sell, or give away, religious, school, and missionary books, papers, tracts, and periodicals, such as said church shall deem necessary or useful for the promotion of religion and morality. And for that purpose may purchase or own such printing presses, types, cases, and material as shall be necessary to conduct such publication, binding, and circulation of books and published matter aforesaid: and said publication business shall be under the immediate control and management of a Committee of Publication, to be nominated by the Presiding Bishop, and confirmed or approved by the church, at any General Annual or Semiannual Conference, but the title of the property to be in the corporation, and all suits relating thereto must be in the corporate name.

Article 4.—This corporation may purchase and hold, or receive donations, or in any other legal way, procure, receive, and hold the title of any real or personal property for the use of said church, its stakes and branches, the title of all which, whether purchased, donated, or otherwise legally obtained, or received, and wherever the same shall be located, whether procured by the general church, or any stake or branch, shall be taken to the corporation and in the corporate name of said Reorganized Church: and said corporation shall hold the same for the use of said church, its stakes and branches: and said corporation may sell and convey the same, or any part thereof, applying the proceeds to the use aforesaid.

Article 5.—This church corporation shall have a corporate seal, all conveyances shall be signed by the Presiding Bishop as such trustee, and sealed with the seal of said corporation.

These articles of association shall constitute the by-laws of said corporation, until revised or amended at any General Conference of the Church by a two thirds majority vote of the members of said church present and voting at such Conference. Notice of such amendment shall be given in the church paper at least two months before action can be had on such proposed change. The place of business of said corporation may be changed from Plano aforesaid, to any other place by the direction of the Quorum of the First Presidency, the Bishop and Counselors, and the Publishing Committee. Upon such change to be made, a certified copy of the affidavit of the agreement of this corporation, together with a similar affidavit of the action of said church reorganizing said corporation, and naming such new place, or principal business, shall be filed in the office of the recorder of deeds of the county in which such new principal place of business is located. Such change of principal place of business shall not change or affect the rights of said corporation; but only the location of its principal office or place of business. Said corporation may appoint agents at any time and place to act in behalf of said corporation. Said corporation may sue and be sued, defend and be defended in all courts and places, but all shall be done in said corporate name.

Article 6.—All property now held, or owned by said church in the name of any person, or persons, as trustees or otherwise, including the publication establishment at Plano, Illinois, shall vest in said corporation; and all persons holding such property in trust for said church are hereby directed and required to transfer and convey the same to said corporation, as the property of said church, and said corporation shall by operation of law succeed to all property now owned by said
673 church or held for its use, and may sue and recover the same in the name of said corporation.

Article 7.—The term of office of said trustees shall be as follows, viz.: Of the trustee who is the Presiding Bishop of the Church, during his good behavior, and while he remains such Presiding Bishop of the other trustees who are the counselors of said Presiding Bishop during their good behavior, not extending the term of office of said Presiding Bishop as such trustee, except as hereinafter provided. Upon the death, resignation, or removal from office of said Presiding Bishop, the office of the other trustees shall become vacant, upon the appointing

of another Presiding Bishop who shall be the successor as Bishop, and his assuming the office of such trustee, and thereupon such new Presiding Bishop and his counselors shall be the trustees of said corporation. It being understood that no person can be trustee of said corporation except the Presiding Bishop of said church and his counselors. Said trustees or either of them, may be removed by said church for cause, the same as any other church officer.

At said meeting Joseph Smith acted as Chairman or Presiding Officer and this affiant as secretary.

ISAAC CRAMER.

Subscribed and sworn to before me this 4th day of February, A. D. 1873.

[SEAL.] A. N. BEEBE, Notary Public.

STATE OF ILLINOIS, } ss.
County of Kendall. }

I, Avery N. Beebe, Clerk of the Circuit Court, and *ex officio* recorder, in and for said county, in the State aforesaid, do hereby certify the annexed to be a true and correct copy of the record of an instrument filed in my office the 5th day of February, A. D. 1873, and recorded in Book 31, at page 573.

In testimony whereof I have hereunto set my hand and affixed the seal of said Court at Yorkville, this 5th day of May, A. D. 1892.

[SEAL.] AVERY N. BEEBE, Clerk.

---

674 JACOB GREGG, of lawful age, being produced, sworn, and examined on the part of the Plaintiff, testified as follows:—

My name is Jacob Gregg; I reside at Grain Valley, in Jackson county, Missouri. I have resided in this county sixty-seven years; I resided in the State of Missouri nearly eighty years. My age is ninety or a little past. I was ninety years old the ninth day of last month.

I have held a good many offices first and last in Jackson county. The first office was before this county was organized as a county. I was one of its executive officers, commonly called a constable. That was the first office I held; that was in 1826. I held the office of sheriff in this county in 1833. The term was two years; I was elected for two terms, and held the office four years altogether.

During my term of office is when the Mormons were driven from Jackson county, Missouri. I was not in that affair in any way; the first movement that was made, was when they tore down the printing office of the Mormon people. When I came in town one morning I saw a crowd of men standing by the courthouse; saw that one of them had a rope in his hand, when I got up about half way to them, two men came up to meet me; said they had some business back at
675 the tavern. They took me back in a room there, and one of them went out and locked the door after him, and left me with the other one, and I know nothing about what was going on outside until I got out of there.

They had torn down the printing office, and dispersed before I got out to see what was being done. After I was let out of the house all was quiet; everything had quieted down, and was civil enough after I got out. I cannot say what had been done by the mob or the citizens while I was in that room. I learned afterwards that they had

demolished the printing office, for they seemed to think that was the seat of trouble, and they had demolished it.

The Mormons were not driven away from their homes at that time, but they were afterwards in the winter or spring of 1836. My understanding is that they were not directly driven away, but they
676 were permitted to go across the river, and the citizens here permitted them to go.

None of them remained here at that time, and I do not think they were permitted to remain. I resided here several years before 1833, and I knew a great many of the people. Yes, sir, there was a man here by the name of Boggs who was afterwards Governor of this State, I was acquainted with Boggs several years before that time. I knew a man by the name of Samuel Weston.

The state of the feeling of the people at that time against the Mormons was very intense, a feeling of intense indignation. The people were wrought up to a state of intense indignation against them.

I think if I had called upon the people to assist me in enforcing
677 the law a part of the citizens would have obeyed, and a part of them would not; there is no doubt about that. I have been living here ever since that time; lived in this county ever since 1826, and I have known the feelings of the people since that time against the Mormons, as to the time after the printing press was destroyed, and the Mormons were expelled from this county, in which it would have been safe for them to have returned depends on circumstances.

There is a circumstance of Boggs being shot, and that was laid upon the Mormons, and that produced some feeling. It was three or four years after the Mormons were driven away; I cannot say just how long, but it was after he was out of the office of Governor and the citizens would not have permitted them to return or come back without violence.

I mean that I do not think the Mormons would have been permitted to come back at that time without meeting with violent treatment. That feeling gradually wore off, but continued for several years undoubtedly. It was then a good deal as it is now, only then men's passions and prejudices were worked up a good deal more.

678 There are citizens here now who do not like the Mormons and would rather not see them come into the country at this time.

These Latter Day Saints who were driven across the river at that time, I do not know whether they were permitted to come back or not, at any rate they did not do it. I do not think they were permitted to come back, now that is my opinion about it, or that they would have been permitted to come back, at any rate they would not have been permitted to do so for some time.

John King succeeded me as sheriff of this county; he is the same man who was the leader of the mob here at the time the printing office was destroyed. He held the office four years; it is very likely
679 that his connection with, and the part he played in driving the Mor-

mons out of this county made him sheriff,—that is the reason he was elected. The part he took in that transaction against the Mormons, I have no doubt made him sheriff.

I remember some of the Mormon people, with the first that came here, there were ten of them. There was Joseph Smith, Sidney Rigdon, and Parley Pratt, but I cannot recollect the balance. I think I have seen Oliver Cowdery. Did not know the Whitmers. I do not remember a man by the name of W. W. Phelps.

I saw the papers that were published here at that time by the church; I never saw anything but common newspaper reporting, the same as is in any newspaper.

680 Yes, sir, it was my duty as sheriff to arrest all parties who were engaged in breaking the laws at that time.

I did not have much communication with the Mormons while they were in this county. I took the census, and my impression was that they were a rather law-abiding class of citizens.

I know I did not see anything wrong with them; they compared with other people here in the county; appeared to be a law-abiding class of citizens, and I think they were about as good and as intelligent as their neighbors.

CROSS-EXAMINATION.

681 I was not here in any official capacity during the years 1839, or 1840. I was elected as an officer of the State in 1840. I do not believe that in 1840 the Mormons would have been safe here in Independence; I am pretty sure it would not have been safe for them to have attempted to live here at that time in 1840.

As to whether they were well-behaved, I do not think that would have made any difference; my impression is, that it would not have been safe for them. There was the circumstance of Boggs being shot, and the citizens believed it was the Mormons who did it, and that created anew the excitement and prejudice against them.

This prejudice against the Mormons never entirely wore away. You will find some people now who have a prejudice against the Mormon people, or against their religion, and there are people here now who have that same prejudice against them. In 1865 that sentiment was such that, well, it had ought not to have disturbed peaceable citizens, but in some instances it probably would during all this time from 1833 up.

RE-EXAMINATION.

684 There was a company raised here at Independence in 1838, to go to Far West, and from Caldwell county, to aid in the expulsion, that was an order issued by Governor Boggs to the militia to go to Far 686 West and expel the Mormons from that place.

---

688 WILLIAM STEWART, of lawful age, being produced, sworn, and examined on the part of the Plaintiff, testified as follows:—

My name is William Stewart; I was born in 1819, I reside in Jackson county, Missouri, between Independence and Kansas City; lived there about ten years. Before that I lived in Westport; that is in Jackson county; lived there twenty four years; came to Jackson
689 county in 1836, lived about two miles from here when I first came, from 1836, to 1843. That was when I was a young man, before I was married.

I was a deputy sheriff for a couple or three years under Billy Butts; he was the sheriff, and I was deputy under him in 1856, 1857, and 1858, I believe.

I was pretty well acquainted with the people of the county at that time; when I first came there were but very few men in this county with whom I was not well acquainted. I knew almost every man in it; but of late years there has been so many newcomers, that I do not know the people of the county at all.

From the time I came here, down to 1870, the sentiment of the people and the talk was very hard against the Mormons; they did not seem to have much use for them, and said lots of hard things
690 against them all. The first settlers here were bitter against them. Those who lived here at the time the Mormons were here. Those who lived here at the time of the old settlers said many rough and bitter things against them, that is the way they talked about them when I first came here, and for many years afterwards, every time they had an opportunity to talk of them, they could not say anything good of them.

DEFENDANT'S EVIDENCE.

Taken in Salt Lake City, Utah, beginning March 16, 1892.

1 WILFORD WOODRUFF, of lawful age, being produced, sworn, and examined on the part of the Defendants, testified as follows:—

My name is Wilford Woodruff. I reside in Salt Lake City, Utah. Before I came here, I lived at Nauvoo, and stopped at Winter Quarters one season, and came from there here. I may say I came from Nauvoo here.

I am a member of the Church of Jesus Christ of Latter Day Saints. I have been a member of the church about fifty-eight years. When
2 I first became associated with the church, I think the name was the Church of Christ. I became identified first with the church in 1833. I recognize King James's translation of the Holy Bible to be one of the standard books of the church, and acknowledged as authority in the church. I occupy now the position of President of the church in Salt Lake.

3 The authorized publications of the church are the Bible, the Book of Mormon, and the Book of Doctrine and Covenants. They are the standard works. Of course there are other works that have been published by the church from time to time. I think there is the "Pearl of Great Price," I think that is the name of the book that has been accepted by the church here in the Valley. I don't remember any others now. The law of tithing, the revelation of 1838, was a law of the church at Nauvoo, Illinois, and is a law of the church of which I am President. The doctrine of baptism for the dead is practiced in the church of which I am now President. The name adopted by the original church established in 1830 was the "Church of Jesus Christ of Latter Day Saints." I don't know whether any action was taken by the church towards indorsing or receiving the revelation of
4 1838; from my memory I cannot say.

The general rule of the church was that the revelations were given the church through Joseph Smith while he lived, but the rule required that they should be submitted to the quorums of the church before being presented to the church. To what extent they were laid before the quorums, I cannot say from memory. In those days I was absent from the church a good deal of the time on my travels. It was not always that I was at the conferences. I will say, however, that the doctrines of the church have been presented at the conferences at various times, but in regard to those revelations being presented, they were always accepted as the law whenever they were presented to the church, or to the people, I should say.

The records of the original church were brought here from the historian's office in Nauvoo, they were brought here and used for many years in the historian's office. Doctor Willard Richards was the historian of the church for a time, and George A. Smith was also church historian, and the church records they made have been made up from their records of the church.

Joseph Smith organized the endowments in the church, and gave endowments the same as has been practiced ever since by the church.

The number of officers and other members of the church that emigrated to the territory of Utah,—you may say they all emigrated in a body, of course there were some of them who did not come west of the mountains, but I may say that the bulk of the church did.

Joseph Smith of course taught the principle of plural marriage
10 commonly called polygamy and he not only taught it but practiced it too.

Of course Brigham Young led them as a people from Nauvoo. They followed him from Nauvoo, first to Winter Quarters, and from there to this valley. There were some four thousand came with him to this valley. I don't remember the exact number, but some four or five thousand. They came in '48. I should say some fifteen hundred
12 or two thousand came through the same season later on. The next season there were two divisions came out here; I don't know the number, but the records will show that. I was connected with the *Times and Seasons* printing office. Brother Taylor and myself published the *Times and Seasons*. I attended to the temporal part of it, and he was the editor.

CROSS-EXAMINATION.

13 I was born at Hartford, Connecticut, the first day of March, 1807. I went to Kirtland the spring of 1834. I became a member of the church at Richland, Oswego county, New York, in 1833. I was a farmer at the time I was baptized. I was a single man at the time.

I was married first the 13th of April, 1837, at Kirtland, Ohio. I was married by a gentleman by the name of Williams. He was a counselor, I think, to the First Presidency of the church for a while. Dr. Frederick G. Williams was the name.

I think I was married at the house that President Joseph Smith occupied. The temple was finished at Kirtland at the time, but I was not married in the temple.

The ceremony that was used was the common ceremony of the land. I don't know that I can repeat it. I don't know whether it was the ceremony prescribed by the Book of Doctrine and Covenants that was published at that time or not.

There was a ceremony published at that time, and the officiating clergyman was a minister of the church at that time, and was occupying a position in the church. I don't recollect that I was married by the ceremony published in the Book of Doctrine and Covenants.
14 I don't recollect what the ceremony was, but it was the ceremony that was used at the time, whatever it was.

There is a ceremony recorded in the Book of Doctrine and Covenants on marriage. I don't know what the date of it is. I don't recollect the date of it.

If it was prior to the time I was married, of course it was in the Book of Covenants, but I cannot say whether it was or not. I think

it was published in the 1835 edition of the Book of Doctrine and Covenants, and I was married by a regular minister of the church, and was a minister myself at the time.

Q.—Now do you say you were not married according to the formula in the Book of Doctrine and Covenants?

A.—No, sir, I do not say so, and I did not say so. I said I didn't remember what the ceremony was, but I suppose it was the same ceremony that was used in the church. I expect it was, but what it was I cannot say, for I do not remember. I do not say that the minister who performed the ceremony of marriage for me had a regular ceremony and did not adhere to the ceremony published in the Book of Doctrine and Covenants. I did not say anything of the kind, nor have not said anything of the kind.

15 Exhibit E being the 1835 edition of the Book of Doctrine and Covenants, I recognize as a standard work of the church. Section 101 paragraph 2 of Exhibit E, reads as follows:—

> Marriage should be celebrated with prayer and thanksgiving; and at the solemnization, the persons to be married, standing together, the man on the right, and the woman on the left, shall be addressed, by the person officiating, as he shall be directed by the Holy Spirit: and if there be no legal objections, he shall say, calling each by their names: "You both mutually agree to be each other's companion, husband and wife, observing the legal rights belonging to this condition: that is, keeping yourselves wholly for each other, and from all others during your lives." And when they have answered "Yes," he shall pronounce them "husband and wife" in the name of the Lord Jesus Christ, and by virtue of the laws of the country and authority vested in him: "may God add his blessings and keep you to fulfill your covenants from henceforth and forever. Amen."

I should think it altogether likely that that ceremony was administered to me when I was married, but from memory I cannot say that it was. We certainly used the ceremony made use of in the law of the church at the time.

I went from Kirtland to Canada, and from Canada to Connecticut and from Connecticut to Fox Island. I was a missionary. I was not present at the General Assembly at the time the quorums were all assembled. I was in Tennessee and Kentucky. That meeting was in August, 1835. At that time I think I held the office of an elder, but of course I do not know positively that I did.

I went to Missouri in the spring of 1834. I was not married then. I went to Missouri on a mission to preach; I think you may call it that. There were two hundred and four went with me. I was in Zion's Camp. The name *Zion's Camp* referred only to a number of men and women who left Kirtland.

There had been some parties driven out of Jackson county at that time. We took goods and means to assist those members of the church who had no homes and not much to do with. Of course the history of their operations is published in the history of the times.

17 The object of that expedition was to restore those members to their lands and homes from which they had been driven, if they could accomplish it. At that time parties had been driven from Jackson

county from their own property that they held. I know they had been driven from their own property.

The church probably owned the Temple Block or something like that, but there was no property held other than that. I cannot tell you when the Temple property was bought. The church never went back to Jackson county after that.

I knew Bishop Partridge in Kirtland. I knew him in Missouri. I don't know that money was contributed by the church to put in the hands of Bishop Partridge for the purpose of going to Missouri and purchasing lands. I do not recollect now that I ever saw a report from Bishop Partridge on that subject. I cannot say what was published in regard to that, if anything was published.

At that time the Temple Block was supposed to be and was claimed by the church as church property, but how or in what way, I don't know. I don't know whether there has ever been a time from that day to this that the church has not claimed the Temple Property as church property.

Of course the church has looked upon that Temple Block as a place to build a temple upon, according to a certain revelation given at an early date in the church, and that is about all I can claim about it, or can answer to the question. That revelation is recorded in the Book of Doctrine and Covenants in the 1835 edition.

18 I have never heard of any disclaimer by the church that the Temple Property was not church property. The church has never disclaimed owning the property. The church has never taken any official action towards filing a disclaimer. I should have heard of it by rumor, if there had been such action, and I will say that I have not heard of any.

I never was in Far West but once in my life, and then only two or three hours. Do not recollect when it was; but I was there, and if I am not mistaken, it was on the 26th day of April, 1839. There
19 were very few prominent members of the church there at that time, a very few members, for they had all been driven out. There were a few of course, but not many at that time. I cannot tell you how many. I should say there were twenty-five, perhaps. Brigham Young was there; Orson Pratt, John Taylor, George H. Smith and Elias Smith, also. I do not know whether Elias Higbee was there or not. I do not recollect a man by the name of E. J. Gates. I think the name was Edward J. Gates. I do not think there was anything said at that time about abandoning the building of the Temple in Jackson county, Missouri. I referred in my direct examination to the revelation given commanding the building of the Temple in Jackson county, Missouri, or in substance that.

To refresh your memory, Mr. Woodruff, I will read from Exhibit E, being the 1835 edition of the Book of Doctrine and Covenants, section 4, paragraphs 1 and 2:—

20 1. A revelation of Jesus Christ unto his servant Joseph Smith, Jr., and six elders, as they united their hearts and lifted their voices on high; yea, the word

of the Lord concerning his church, established in the last days for the restoration of his people as he has spoken by the mouth of his prophets, and for the gathering of his saints to stand upon Mount Zion, which shall be the city New Jerusalem: which city shall be built, beginning at the Temple Lot, which is appointed by the finger of the Lord, in the western boundaries of the State of Missouri, and dedicated by the hand of Joseph Smith, Jr., and others, with whom the Lord was well pleased.

2. Verily, this is the word of the Lord, that the city New Jerusalem shall be built by the gathering of the saints, beginning at this place, even the place of the temple, which temple shall be reared in this generation; for verily, this generation shall not all pass away until an house shall be built unto the Lord and a cloud shall rest upon it, which cloud shall be even the glory of the Lord which shall fill the house. And the sons of Moses, according to the holy priesthood, which he received under the hand of his father-in-law, Jethro, and Jethro received it under the hand of Caleb, and Caleb received it under the hand of Elihu, and Elihu under the hand of Jeremy, and Jeremy under the hand of Gad, and Gad under the hand of Esaias, and Esaias received it under the hand of God; Esaias also lived in the days of Abraham and was blessed of him, which Abraham received the priesthood from Melchizedek, who received it through the lineage of his fathers, even till Noah; and from Noah till Enoch, through the lineage of their fathers, and from Enoch to Abel who was slain by the conspiracy of his brother, who received the priesthood by the commandments of God by the hand of his father Adam, who was the first man; which priesthood continueth in the church of God in all generations and is without beginning of days or end of years.

A.—Yes, sir, that is the Temple Lot in Jackson county, to which I have referred in my testimony. I went to Nauvoo, I think, in the spring of 1839. I was not at the conference at Far West in 1838. I was elected by a vote of the church to be an apostle in 1839, at Far West.

We held a meeting there at that time, and I only spent a few hours there; but during the time I was chosen and received my ordination as an apostle. That was in April. That was the time at which the
21 parties I have named were present. Joseph Smith was not present, nor Hyrum Smith, nor Edward Partridge.

There was a revelation received calling me to be an apostle. I cannot say whether that revelation was ever submitted to the church for approval or not. In order to answer that question particularly, I will say that whenever revelations were given by the Prophet Joseph to the church, they were accepted by the church as a general principle. It was generally received.

In some things, it was the law of the church that all things should be done by the common consent of the people; in the matter of presenting temporal business and in the quorums, it was. But I have no recollection of any revelation given to the effect that all church affairs pertaining to what should or would be the law of the church that that course was to be pursued, that the matter should be submitted to the body for its sanction.

All the revelations ever given to Joseph Smith before his death were in some form or other presented to the church for its adoption. Yes, sir, in book form or in some other form. Either in manuscript or book, one of the two forms.

I cannot say that the church would be bound by anything until it

had been presented to and accepted by them. As I said before, whenever revelations are given to the church and printed and delivered to the people, they are accepted by the people. The people accept them before they are printed.

24 *Q.*—Well, you have not answered my question yet. The question is this: Has it not been the practice of the church from the time of its organization in 1829 or '30 up to 1844, June 27, and practiced by you since you have been President of this Church, to present everything to the church for its adoption, before the church would be bound by it?

A.—Well, of course, as a principle of the church.

Q.—Yes, sir, I thought so, and that is the principle you went on when you presented the Manifesto here to the church for adoption?

A.—Yes, sir, of course.

Q.—That is the principle upon or under which the church was governed prior to 1844, that everything was presented in some form or other for adoption?

A.—Yes, sir.

Q.—Presented to the church for adoption?

A.—Yes, sir, presented to the church for adoption. These things depend on circumstances as I before said. There was a council held, and business done and revelations that had been received and as a matter of course all the works had to be presented to the church for approval.

The church has a right to reject or approve of revelations and any man independent of the action of the church has a right to accept it
25 or reject it as he sees fit and the church has a right to say whether they will accept it or reject it as a revelation, and before a revelation can be accepted by the church, as a law, it must in some form or other be presented to the church and accepted by the church, and that has been true since the time I first became connected with the church.

I recognize the revelation of 1841, January 19, as one of the revelations that was accepted by the church, and it was accepted before
26 1844. The revelation referred to is on page 429, of Exhibit A, being the edition of the Book of Doctrine and Covenants published by the Utah Mormon Church, paragraphs 37, 38, 39, 40, and 41 of which, are as follows:—

29 37. And again, verily I say unto you, How shall your washings be acceptable unto me, except ye perform them in a house which you have built to my name?

38. For, for this cause I commanded Moses that he should build a tabernacle, that they should bear it with them in the wilderness, and to build a house in the land of promise, that those ordinances might be revealed which had been hid from before the world was;

39. Therefore, verily I say unto you, that your anointings, and your washings, and your baptisms for the dead, and your solemn assemblies, and your memorials for your sacrifices, by the sons of Levi, and for your oracles in your most holy places, wherein you receive conversations, and your statutes and judgments, for the beginning of the revelations and foundation of Zion, and for the glory, honor,

and endowment of all her municipals, are ordained by the ordinance of my holy house which my people are always commanded to build unto my holy name.

40. And verily I say unto you, Let this house be built unto my name, that I may reveal mine ordinances therein, unto my people:

41. For I deign to reveal unto my church, things which have been kept hid from before the foundation of the world, things that pertain to the dispensation of the fulness of times.

38 The revelation of June 22, 1834, commonly called the Fishing River revelation was presented when that revelation was given. I recognize that as being the law of the church and adopted by the church. That revelation was adopted prior to 1844. The revelation of July 8, 1838, on tithing, I recollect reading in the Book of Doctrine and Covenants. That was a part of the church law prior to 1844, and so recognized and adopted by the church.

Yes, I stated in my direct examination that the church prior to 1844 practiced the ordinance of baptism for the dead in Nauvoo. I
39 think that was practiced in 1841. I think it was in '41 or '42, I would not be sure. There was no order through Joseph Smith that I ever knew anything about to stop the practice of baptism for the dead, nothing of the kind that I ever heard anything about, and it was continued up to the time of his death, I think, so far as there was opportunity or occasion to practice it.

There was no order given through Joseph Smith stopping the ordinance of baptism for the dead that I remember of. If there was any such order or direction issued, I don't recollect it. I wouldn't say there was not such an order. If there had been such an order given through the Prophet Joseph Smith, that would have been the law of the church of course, it would have been carried out.

I do not recollect any ceremony taking place of baptism for the dead in 1843 or after that, but I suppose they always baptized for the dead there as long as they had a chance. Now that is my view of it but I cannot remember any particular instance where it was done. But I suppose they did so as long as they had an opportunity to do so.

I cannot tell the date of it, but I baptized men in the font there myself and saw others do the same thing before we left there; but as to the dates, of course I could not say without referring to my minutes. Yes, sir, that was done in the font. I do not know that the font was ready in 1843. History of course will give an acccount
40 of that. The letters to which I refer, sections 127 and 128, the Book of Doctrine and Covenants, Exhibit A, on the subject of baptism for the dead and other subjects, the dates are September 1, and September 6, 1842, but I thought it was later than that. I do not know whether I was in Nauvoo, September 1, and September 6, 1842, or not. I should have to examine my journals before I could answer that question. I think it was in 1845 that I was one of the editors of the *Times and Seasons*; no, I was wrong about that, it was before the death of Joseph Smith, and he was killed in 1844. It was before that that I was connected with the *Times and Seasons*.

I was assisting John Taylor in the editorship of that paper.

41 I was not there at the time of the death of Joseph Smith. I was in the eastern country at that time, in the city of Boston. I do not know how long I had been there, but it had been several weeks, though. I was there on a mission. I started there in the spring before his death; that is, the spring before the death of Joseph Smith. I think it was after the April conference, 1844.

42 In my direct examination the other day, I spoke of endowments, ordinances, and washings that were practiced at Nauvoo. There were no endowments, ordinances, or washings, nothing of that kind practiced in the residence or building occupied as a residence by Joseph Smith, not to my knowledge, and if it had been carried on there, I think I should have known it.

Q.—There was a special revelation in relation to baptism for the dead?

A.—Yes, sir.

Q.—Did not that command that the ordinance of baptism for the dead should be performed in the temple and nowhere else?

A.—No, sir.

Q.—Would you swear to that?

A.—No, sir, not when this revelation was first given concerning the dead.

Q.—And that you swear to?

A.—Yes, sir, of course when you have a temple, the order of God has always been that the ordinance must be administered in it, but when there is no temple, it may be administered outside of the temple.

Q.—Then you say the order was to administer it outside of the temple in the river until the temple was completed?

A.—Yes, sir. That was the order of the Prophet Joseph Smith, and these other ordinances of anointing and washing have been done outside of the temple, and there was an order from the Lord to the prophet, or else it would not have been done.

44 I cannot give you a revelation permitting or authorizing that practice. I just want you to understand one thing, that Joseph Smith was the prophet, seer, and revelator, and whatever he said or counseled in these things was accepted.

He was not greater than the law that God had revealed through him, but he was the medium through which the law was revealed.

Q.—Well, after the law had been revealed to him, then was the prophet higher and greater than the law so revealed to him?

A.—I do not understand what you mean.

Q.—I mean that after the law had been revealed, was he not subject then to the law the same as any other person?

A.—He was the law himself, but I suppose he was subject to the law. After a law had been received from God and communicated to the church in that manner through the medium of Joseph Smith as the prophet, seer, and revelator, I do not know that the prophet

was higher than that law, but I do say that he was given the control of those things.

After the law had been revealed from the Lord, I do not think that it was possible for the Lord to change that law by revealing something that was contrary to the law previously revealed through the prophet. I do not think that he would do that. But as I say or have said before with regard to all your questionings on these things, the prophet himself stood at the head, and he received counsel from the Lord, and he dictated to the church in regard to these things.

Q.—To refresh your recollection, I read paragraph 37 page 433 of Exhibit A, as follows: "And again, verily I say unto you, how shall your washings be acceptable unto me, except ye perform them in a house which ye have built unto my name?"

A.—Well, that is all right. Yes, sir, I say these washings were acceptable unto the Lord. We think so. We think they were performed in a house built unto the Lord.

The Masonic Temple was not a house built unto the Lord. I do not say there were any washings in the Masonic Temple, but there were meetings held in the Masonic Temple. There were certain ordinances performed there at the start, because there was no temple built at that time. It was just as it was in this city, for there were a great many ordinances performed there at that time the same as there has been here, because there was not a temple built at the time and they were performed outside of a temple for that reason.

Q.—Now do you claim that these washings and anointings performed there under those circumstances were the washings and anointings referred to in paragraph 37 that I have just read? I will read paragraph 39 on page 434 of Exhibit A again. It was read to you the other day on your direct examination, and I will call your attention to it again. It is as follows:—

Therefore, verily I say unto you, that your anointings, and your washings, and your baptisms for the dead, and your solemn assemblies, and your memorials for your sacrifices, by the sons of Levi, and for your oracles in your most holy places, wherein ye receive conversations, and your statutes and judgments, for the beginning of the revelations and foundation of Zion, and for the glory, honor, and endowment of all her municipals, are ordained by the ordinances of my holy house, which my people are always commanded to build unto my holy name.

Now I will ask you again if you claim that the washings and anointings performed under the circumstances you have just stated are the washings and anointings referred to in the paragraph I have just read?

A.—Yes, sir, I so understand it.

Q.—Do you say that the ordinances that were performed there were the ordinances referred to in that paragraph on washings and anointings?

A.—A portion of them were. We have always had permission.

Q.—Did you not state in your examination in chief that those were the identical anointings that you received there? Did you not state

to Mr. Hall when he was examining you that the anointings and washings referred to in paragraph 39 of this revelation which I have read from Exhibit A, were the washings and anointings you received at Nauvoo?

A.—Well, it is as I said. There are different washings performed in these ordinances and some of them were performed there.

Q.—Well, do you say that the ordinances of washing and anointing that were performed there were the ones referred to in this section or paragraph?

46 *A.*—Some of them might be.

Q.—I will read you paragraph 40 of this same revelation, page 434, of Exhibit A:—

> And verily I say unto you, let this house be built unto my name, that I may reveal mine ordinances therein unto my people.

Now do you claim that the ordinances referred to in the preceding paragraph were being performed there before there was any house erected unto the Lord?

A.—I will say they were being performed before we had any house. When there was no house erected for that purpose, there were buildings or rooms taken and dedicated to the Lord for the performance of these ordinances.

Q.—But the revelation says the house must be built in which the Lord will reveal his ordinances?

A.—Yes, sir.

Q.—Now were they revealed and administered outside of that house?

A.—Those ordinances were revealed at Kirtland,—the ordinances of the church were revealed at Kirtland and made manifest to the church there, but then they were in a different form perhaps.

Q.—What ordinances were revealed at Kirtland, and what revelation will I find it in?

A.—I don't recollect what particular part of the book it is in, but it was given in 1836.

Q.—That was the ordinance on washing of feet and that alone, was it not?

A.—Yes, sir, that is the one I have special reference to, but there were others besides that too.

Q.—Now, sir, do you not know in that revelation of 1836 there was no ordinance except that of washing of feet revealed?

A.—Yes, sir, that was all.

Q.—And those were the ordinances that were performed in the Temple at Kirtland,—washing of feet and anointing with oil?

A.—Yes, sir, those were the ones. These are not the ordinances that are taught in this revelation of January 9, 1841. I say those ordinances or endowments were given and taught at Kirtland. These ordinances were adopted or performed in reference to washing the feet. That is an endowment ordinance; yes, sir, it is. I do not think these are the endowment ordinances referred to in section 39, Defendant's Exhibit A.

Q.—Then why do you say that the ordinances of washing and anointing and baptisms for the dead, that were referred to here in 1841 were revealed and practiced at Kirtland?

47 *A.*—I did not say that. I said there were ordinances revealed at Kirtland.

Q.—These were not revealed though?

A.—Yes, sir—no, sir, they were not practiced. They were not known to the church prior to the giving of the revelation of 1841. They were not known to the church before the time they were revealed and they were revealed in 1841. That revelation was given before the temple was built.

Q.—Does not this revelation say that they were to be revealed in a house built unto the name of the Lord,—that "these ordinances might be revealed, which had been hid since before the world was"?

A.—I don't know about that.

Q.—Read paragraph forty of that same section and see if that is not so.

Answer.—

Therefore, verily I say unto you, that your anointings, and your washings, [I am reading the one before it too,] your baptisms for the dead, and your solemn assemblies, and your memorials for your sacrifices, by the sons of Levi, and for your oracles in your most holy places, wherein ye receive conversations, and your statutes and judgments, for the beginning of the revelations and foundation of Zion, and for the glory, honor, and endowment of all her municipals, are ordained by the ordinances of my holy house, which my people are always commanded to build unto my holy name. And verily I say unto you, let this house be built unto my name, that I may reveal mine ordinances therein unto my people.

Q.—What do you say to that?

A.—Yes, sir, that is it.

Q.—Now were these ordinances revealed in 1841 before that temple was built?

A.—I don't know that I can say positively about that. I will say this, that Joseph Smith was killed before the temple was completed, and this revelation was given by Joseph Smith before his death.

48 Now there are two facts about which there can be no manner of dispute or question. The revelation was given before Joseph Smith's death and the ordinances were practiced before his death in precisely the same manner as they have been administered since his death.

Q.—Where is the revelation revealing the ordinance of anointing, washing, and baptism for the dead as spoken of in paragraph 39, on page 434 of Exhibit A in the revelation of 1841?

A.—There is no revelation in existence or in print that gives those ordinances to the public that I know of.

Q.—There is no revelation in existence or in print that you know of that gives these revelations to the public?

A.—No, sir, not that I am aware of. These ordinances that were used in connection with the conferring of endowments were given by instruction; that is, not public to the world; in other words, as the ordinances are administered, the manner and form of doing it is not

made public to the world. They were not presented to the church for its acceptance as a body or as a church,—I say I think they were not. In my direct examination the other day, by Mr. Hall, I was asked to read section 44, paragraph eighty-three of the 1835 edition of the Book of Doctrine and Covenants for the purpose of showing that certain things therein mentioned were to be shown or given to the world. Yes, sir, I recollect that.

49 *Q.*—I will ask you now if the things that were spoken of in that revelation were not to be revealed to the church?

A.—They were taught to the church; that is, they were taught to individuals in the church as they received these ordinances. When they came to receive ordinances, they were taught certain things and these were among the ones so taught.

Q.—Were they not presented to the church for its acceptance as a body or as a church?

A.—No, sir.

Q.—They were not?

A.—I think not.

Q.—Do you say they were not?

A.—I say I think they were not.

Q.—Mr. Woodruff, don't you know that at a general conference of the church in Kirtland in 1835 that that very revelation was presented to the church and passed every quorum in the church and was then presented to the body of the church in conference assembled and was accepted by the church after a vote was taken thereon?

50 *A.*—The principles were known there at that time and were accepted by the church. Those revelations on the endowments or ordinances were accepted there at that time, but there was nothing said about baptism, and I do not think any of the endowments were given there at that time. I do not know that the things spoken of in the revelation of 1835 referred to anointings, washings, and baptisms that were referred to in the revelation of 1841. After reading the paragraph, I don't know that I can say that it refers to the anointings, washings, and baptisms referred to in the revelation of 1841. There is nothing in the paragraph that I have read that refers to washings, anointings, or baptisms. There is nothing said about that at all.

I said in my direct examination that the patriarchal order of marriage was taught by Joseph Smith in Nauvoo. There was no rule or law of the church at that time that referred to the patriarchal system of marriage or plural marriage as it is now called.

I undoubtedly knew of its being taught to certain individuals at Nauvoo in 1841 and 1842, but I cannot say as to the time from memory. I know that Joseph Smith taught it to certain individuals,

54 but he did not teach it openly to the church. I cannot say that that was 1841 or 1842. I cannot at this time recollect the exact dates, but it was quite a while before his death that he taught it.

I heard of the John C. Bennett secret wife system. That was not the system that was accepted by the church. The Bennett system was not accepted by the church. At the time of the Bennett system, I cannot say that Joseph Smith was teaching plural marriage.

He was not teaching it publicly; he never did teach it publicly in his life,—any system of plural marriage or patriarchal marriage. He taught the principles to certain individuals, but as to dates, I haven't it now in my mind.

The *Times and Seasons* which you hand me we published there at Nauvoo, for quite a while. I think we published it up to the time of
56 Joseph Smith's death and I suppose that is it. Yes, sir, that is the same book. I think that is without doubt the original book.

Q.—Now you have said that the doctrine of plural marriage was taught in Nauvoo in 1841 and 1842, and I want to read this article or letter found on page 939, dated October 1, 1842:—

> We the undersigned members of the Church of Jesus Christ of Latter Day Saints and residents of the city of Nauvoo, persons of families, do hereby certify and declare that we know of no other rule or system of marriage than the one published from the Book of Doctrine and Covenants, and we give this certificate to show that Dr. J. C. Bennett's "secret wife system" is a creature of his own make as we know of no such society in this place nor never did.

That is signed by S. Bennett, George Miller, Alpheus Cutler, Reynolds Cahoon, Wilson Law, W. Woodruff, N. K. Whitney, Albert Pettey, Elias Higbee, John Taylor, E. Robinson, and Aaron Johnson. Now what do you say to that?

A.—Well, sir, that is correct, for we never did acknowledge it up to that time. No, sir, and at no other time, up to the death of the prophet.

I signed the letter you have just read. There was no other rule of marriage acknowledged by the church except what is found in the Book of Doctrine and Covenants, the 1835 edition. I did not know of any other rule at the time and if I did, I do not now recollect it.

57 *Q.*—Now here is another certificate that I want to call your attention to, following the one I have just read you on the same page and in the same column, it is as follows:—

> We the undersigned members of the Ladies' Relief Society, and married females do certify and declare that we know of no system of marriage being practiced in the Church of Jesus Christ of Latter Day Saints save the one contained in the Book of Doctrine and Covenants, and we give this certificate to the public to show that J. C. Bennett's "secret wife system" is a disclosure of his own make.

That is signed by the following persons: Emma Smith, president, Elizabeth Ann Whitney, counselor, Sarah M. Cleveland, counselor, Eliza R. Snow, secretary, Mary C. Miller, Lois Cutler, Thirza Cahoon, Ann Hunter, Jane Law, Sophia R. Marks, Polly Z. Johnson, Abigail Works, Catherine Pettey, Sarah Higbee, Phebe Woodruff, Lenora Taylor, Sarah Hillman, Rosanna Marks, and Angeline Robinson.

Now I observe amongst the names I have read to you, the name of Phebe Woodruff,—she was your wife, was she not?

A.—Yes, sir.

Q.—And the name of Emma Smith, also.

A.—Yes, sir, she was the wife of Joseph Smith, the President of the Church, and she was also president of the Ladies' Relief Society. Elizabeth Ann Whitney was the wife of Bishop N. K. Whitney. Sarah M. Cleveland was a counselor to Emma Smith as president of the Ladies' Relief Society, and Eliza R. Snow was the secretary of this society.

I know all those ladies whose names appear to that certificate.

There could not have been any rule of marriage or any order of marriage in existence at that time except that prescribed by the Book of Doctrine and Covenants to their knowledge. They would certainly have known it and up to the 1st day of October, 1842, there was no such system taught or practiced openly or secretly to my knowledge.

Joseph Smith taught us privately, or taught some of the members of the church privately the Abrahamic principle of marriage or the patriarchal system of marriage.

From the teachings of the Bible, I think that Abraham practiced the plural system of marriage. I think he had more wives than one. I think that it is represented that Hagar was his wife, and that Sarah was also his wife. Sarah was his first wife, and then he took Hagar.

Q.—Are you willing to swear that it is represented in the Bible that Hagar was Abraham's wife?

59 *A.*—I think that is the way it is represented.

Q.—Are you willing to swear that in any place in the Bible it is represented that Hagar is the wife of Abraham? Whether it is so stated in the Bible in any place?

A.—Well, my view of it is that she was his wife,—that she belonged to him as his wife, and we know that he had posterity by her, and you can call it what you please.

Q.—My question is, what does the Bible call it, Mr. Woodruff?

A.—I do not recollect.

Q.—Don't the Bible call her a bondwoman?

A.—It might be probable that it does call her that.

Q.—Is that what you mean by a wife?

A.—Well I consider that if a man has a woman married to him, that she is his wife and you can call it a bondwoman or what you please, but I consider that if she lives with him in the relation of a wife, and he has posterity by her, that she is his wife, it matters not what her previous condition of servitude or other condition may have been.

It is not for me to say whether Abraham took her rightly or not, but I will say that Abraham was a good man, and he would hardly take her without he had a right to her or had liberty from the Lord to take her. As I understand it, all the right he had was the right given by his wife Sarah; that was the patriarchal order of marriage.

I don't know what the ceremony was, because there is not much published about it. After Sarah had given Hagar to her husband, it seems that she had convictions about it, and had some trouble apparently in regard to the matter, that is what I gather from my readings in regard to that transaction.

Q.—Let me refresh your recollection by reading the fifth verse of the sixteenth chapter of Genesis:—

And Sarai said unto Abram, My wrong be upon thee: I have given my maid unto thy bosom: and when she saw that she had conceived, I was despised in her eyes: the Lord judge between me and thee.

A.—Yes, sir, I recognize that as coming from the Bible. I think I have read it there myself.

Q.—Now I will read to you the twelfth verse of the twenty-first chapter of Genesis:—

And God said unto Abraham, Let it not be grievous in thy sight because of the lad, and because of thy bondwoman: in all that Sarah hath said unto thee, hearken unto her voice; for in Isaac shall thy seed be called.

A.—I recognize that.

Q.—Do you know what Sarah had said unto Abraham before that?

A.—I would only know from the reading of the Bible.

Q.—Well, don't you know that Sarah had told Abraham to cast out the bondwoman?

A.—Yes, sir, I think I do.

Q.—And the Lord approves it?

A.—Perhaps so.

60 *Q.*—Then does it teach plurality of wives in Abraham's day?

A.—Well, the principle descended to us since that time, and after Abraham's day they took more wives than one, and it descended to us from that. Jacob had more wives than one. Jacob was not Abraham's son, but the principle descended to us from Abraham. That is the first that we see of it, and it descended from Abraham in that way.

I do not say that Jacob was Abraham's son, I say that Jacob was Isaac's son, and Abraham's grandson. Of course you have to take what the Bible says as to what Hagar was on that question. It says she was called a bondwoman. That is all it says on that subject. Of course she is not represented as the wife, but only as the bondwoman. Of course Abraham had only one besides Sarah that is represented as a wife or bondwoman.

Q.—You are sure about that?

A.—Yes, sir, I am sure about that.

Q.—You are President of the Utah Church, and say you are sure of that?

A.—Yes, sir.

Q.—Is not Keturah called Abraham's wife?

A.—I don't know that she is.

61 *Q.*—Well, now, is it not a fact, according to the Bible, that Keturah was Abraham's wife?

A.—I believe it is. Yes, he married her three years after the death of Sarah, according to the account given of it in the Bible. Wives of such men as had more wives than one that belonged to the church here in Utah were not called bondwomen,—were not looked upon as bondwomen. We looked upon them as wives.

I certainly do believe in the Book of Mormon. I received the Book of Mormon as a part of my faith.

Q.—Well, let me read to you from the Book of Mormon, Exhibit B, on page 132; chapter 2:—

Behold, David and Solomon truly did have many wives and concubines, which thing was abominable before me, saith the Lord.

A.—Yes, sir, the passage has been correctly quoted.

Q.—Well, do you count that as a condemnation or approval of polygamy?

A.—You have not read all of it. There is something connected with it on the subject that you have not read.

Q.—Well, what I read was paragraph 24, and now I will read paragraph 25, which is as follows:—

Wherefore, thus saith the Lord, I have led this people forth out of the land of Jerusalem, by the power of mine arm, that I might raise up unto me a righteous branch from the fruit of the loins of Joseph.

What do you say to that?

A.—Well, there are many matters connected with that that would have to be read and considered in connection with it.

62 *Q.*—Well, now, from that reading, do you say that the Lord approved or condemned the practice of polygamy in David and Solomon?

A.—Well, he condemned these men for the course they pursued in that matter.

Q.—Now the 26th paragraph is this:—

Wherefore, I the Lord God will not suffer that this people shall do like unto them of old.

Q.—What does the words *them of old* refer to here? Does it refer to David and Solomon?

A.—It seems to refer to them.

Q.—In the 27th paragraph it says:—

Wherefore, my brethren, hear me, and hearken to the word of the Lord: for there shall not any man among you have save it be one wife: and concubines he shall have none.

Have I read that correctly?

A.—Yes, sir, that is correct.

Q.—That is the law as it was laid down in the days of David and Solomon.

A.—Well, it seems to apply to them.

Q.—Well, don't it apply to them?

A.—Yes, sir, it was the law of God to them.—but read on; read the next sentence.

Q.—The next verse is 28, on the same page, and in the same chapter:—

"For I, the Lord God, delighteth in the chastity of women. And whoredoms are an abomination before me: thus saith the Lord of Hosts. Wherefore, this people shall keep my commandments, saith the Lord of Hosts, or cursed be the land for their sakes. For if I will, saith the Lord of Hosts, raise up seed unto me, I will command my people; otherwise they shall hearken unto these things. For behold, I, the Lord, have seen the sorrow, and heard the mourning of the daughters of my people in the land of Jerusalem: yea, and in all the lands of my people, because of the wickedness and abominations of their husbands. And I will not suffer, saith the Lord of Hosts, that the cries of the fair daughters of this people, which I have led out of the land of Jerusalem, shall come up unto me, against the men of my people, saith the Lord of Hosts: for they shall not lead away captive the daughters of my people, because of their tenderness, save I shall visit them with a sore curse, even unto destruction: for they shall not commit whoredoms, like unto them of old, saith the Lord of Hosts. And now behold, my brethren, ye know that these commandments were given to our father, Lehi: wherefore ye have known them before: and ye have come unto great condemnation; for ye have done these things, which ye ought not to have done. Behold, ye have done greater iniquities than the Lamanites, our brethren. Ye have broken the hearts of your tender wives, and lost the confidence of your children, because of your bad examples before them: and the sobbings of their hearts ascend up to God against you. And because of the strictness of the word of God, which cometh down against you, many hearts died, pierced with deep wounds.

Now I will ask you if more than one wife and having concubines would be a whoredom, or whoredoms under this chapter?

A.—Well, I don't know about that. What I would say would be my opinion merely; but as far as it goes, that would be my opinion from the way it is viewed there.

Q.—Well, now, did not the Lord at this time want to raise up righteous seed?

A.—Probably.

Q.—And he commanded them to do it by one wife, did he not?

A.—Yes, sir, I understand it so.

Yes, sir, I said the *Times and Seasons* was the church paper during the term of its existence. A large part of the time it was published by the church, but it was not regarded as a revelation to the church; it was the church paper, however. John Taylor was its editor. I was one of the Twelve Apostles in 1844.

Q.—I want to read to you now from an article in the *Times and Seasons* of the 15th day of November, 1844, on page 715. I will read the whole paragraph to you, Mr. Woodruff.

A.—I have no doubt in the world that that book you are reading from is the *Times and Seasons.*

Q.—I will read it to you:—

64 The saints of the last days have witnessed the outgoings and incomings of so many apostates that nothing but truth has any effect upon them. In the present instance, after the *sham* quotations of Sidney and his clique, from the Bible, Book of Mormon, and Doctrine and Covenants, to skulk off, under the "dreadful splendor" of "spiritual wifery" which is brought into the account as graciously as if the law of the land allowed a man a plurality of wives, is fiendish, and like the rest of Sidney's revelation, just because he wanted "to go to Pittsburg and live." Wo to the man or men who will thus wilfully lie to injure an innocent people! The law of the land and the rules of the church do not allow one man to have more than one wife alive at once, but if any man's wife die, he has a right to

marry another, and to be sealed to both for eternity; to the living and the dead! there is no law of God against it! This is all the spiritual wife system that ever was tolerated in the church, and they know it.

Now that is dated November 15, 1844?

A.—Yes, sir.

Q.—That is signed, "An Old Man of Israel"?

A.—I do not remember anything about it at all. There is nothing strange about that, though; there were a great many things published at the time that I didn't know anything about, and I cannot, fifty years afterwards, remember everything that was published.

Q.—I will ask you if you recollect this editorial comment by John Taylor, under the head of Union and Peace at Nauvoo:—

For the communication of an "Old Man in Israel," and the letter of Elder Addison Pratt from the islands of the Pacific Ocean, we bespeak a hearty welcome. They are genuine.

Q.—Now do you recall that?

A.—No, sir, but I would like to look at that a moment. I read the *Times and Seasons* at the time. I was a subscriber to the *Times and Seasons* at that time.

65 This was the church paper published at that time, 1844, and was published by an apostle of the church. John Taylor was one of the apostles.

John Taylor held the editorship of the paper for a long time before the death of Joseph Smith, up until the publication was discontinued.

I was never taught in Nauvoo or anywhere else by Joseph Smith at any time that a woman could not be exalted in the hereafter unless she was married.

I do not know where the original of the revelation called the po-
66 lygamous revelation is. I do not know that I ever saw it. I do not believe I ever did see it.

I never saw a copy of it or the original during the lifetime of Joseph Smith. I do not think I saw the one that came here to Utah and purported to be a copy of the original.

I do not know whether the church of which I am the President has the purported copy or not. The church papers are in the possession of various parties,—the historian of the church has them more
67 or less. The original manuscripts or copies of the original manuscripts are in various places.

I don't hold the originals of the revelations that were promulgated through Brigham Young nor John Taylor. Brigham Young and John Taylor were the main Presidents of the Church. You may say the only ones since the death of Joseph Smith. I do not know anything about the original manuscripts.

I was present here in Salt Lake in August, 1852, at the conference. It is altogether probable that it was at the time when this revelation
68 on polygamy was given to the church by Brigham Young. I do not recollect that fact, but I presume I was present.

I have read the sermons Brigham Young published in the *Journal of Discourses*,—some of them,—they are in my library, and I presume are considered correct as published. They are published by the church of which I am President. They are correct in so far as every
69 man had a chance to correct his own discourses, or should do so if he has a chance. Sermons reported by G. D. Watts, one of the official reporters, were considered as reported correctly, and when they are found in the *Journal of Discourses*, they are considered correct. Some of my own sermons are published there, and they are correct.

Q.—Then on the 15th day of November, 1844, there was no marriage ceremony that governed the church as a church, except the one published in the 1835 edition of the Book of Doctrine and Covenants? Is not that a fact, Mr. Woodruff?

A.—None that I know of. That was all the law on the question of
70 marriage that was given to the body of the people.

Q.—Now I will ask you, Mr. Woodruff, why the church of which you are President in the publication of the Book of Doctrine and Covenants in the edition of 1876, eliminated from that edition the section on marriage as found in the 1835 edition, and in all the editions of the Book of Doctrine and Covenants published up to 1876, and inserted in lieu of that section on marriage the revelation on polygamy, dated July 12, 1843.

A.—I do not know why it was done. It was done by the authority of whoever presided over the church, I suppose. Brigham Young was the President then.

Q.—Now, can you tell why the section on marriage that had always been in the Book of Doctrine and Covenants up to that time was eliminated from it and the other inserted in lieu of it?

A.—I cannot tell. It was done I suppose under the direction of Brigham Young or under his administration. I cannot state why it was done.

Q.—Was it not done because one was in conflict with the other?

A.—I do not know that I can state why it was done.

Q.—What covenant were you baptized into the first time you were baptized in 1833?

A.—I was baptized for the remission of sins. I was not baptized
72 into any covenant in particular, only I was baptized as all were who joined the church, for the remission of sins as the ordinance is described in the revelations. There was nothing said about the gospel covenant at that time. There is, of course, a proper baptism for the living and one for the dead, and when I was first baptized, I was baptized for myself. Certainly that is one of the gospel ordinances, and I obeyed that upon the hearing of the preaching of the word.

Q.—Is not the gospel the new covenant in contradistinction to the old covenant in force under the law of Moses?

A.—I suppose it is, for the law of Moses and the gospel as taught

by Jesus are different one from the other. One worked under a different dispensation from the other.

Q.—Now I want to read for the purpose of refreshing your recollection section 47 of Exhibit E, 1835 edition of the Book of Doctrine and Covenants, revelation given 1830, in April:—

Behold I say unto you, that all old covenants have I caused to be done away in this thing, and this is a new and an everlasting covenant: even that which was
73 from the beginning,—wherefore, although a man should be baptized an hundred times, it availeth him nothing: for you cannot enter in at the straight gate by the law of Moses, neither by your dead works, for it is because of your dead works, that I have caused this last covenant, and this church to be built up unto me: even as in days of old. Wherefore enter ye in at the gate, as I have commanded, and seek not to counsel your God. Amen.

Now you recognize that as teaching that the gospel covenant was the new covenant?

A.—Yes, sir.

Q.—Were you baptized after that revelation and into this new covenant at first?

A.—Yes, sir, I told you I was baptized, and I considered it a new covenant.

Q.—Now, when you went to Salt Lake, had you broken that covenant?

A.—No, sir, not that I know of; but let me say that there is no commandment that I know of, nor any law which says that a man shall not be rebaptized. After we came to Salt Lake, we were all rebaptized as pioneers. I have been baptized the second time since I came here. I have been baptized hundreds of times I may say. I was baptized in the reformation. The great majority of the church were rebaptized during the reformation.

Q.—Now, is not this revelation on the question of marriage introduced into the Book of Doctrine and Covenants in the place of the original section on marriage, called a new covenant?

A.—It may be called that. I think it is or was called a new covenant.

Q.—Is that the new covenant spoken of in section 47 of Exhibit E, the edition of 1835 of the Book of Doctrine and Covenants?

A.—Yes, sir.

74 *Q.*—I will read to you from the 1876 edition of the Book of Doctrine and Covenants, being the revelation on polygamy, paragraphs 3 and 4:—

Therefore prepare thy heart to receive and obey the instructions which I am about to give unto you, for all those who have this law revealed unto them, must obey the same.

For behold! I reveal unto you a new and an everlasting covenant: and if ye abide not that covenant, then are ye damned; for no one can reject this covenant, and be permitted to enter into my glory.

Now do you say that refers to the same covenant?

A.—No, sir, I do not say so. I would like to hear the other one read. You have them so mixed that I do not know which is which. I was baptized by regular authority in 1833, and I do not say there

was any necessity of being rebaptized in 1849 or '50, I simply wanted to renew my covenant. None of us had killed anybody nor committed any crime that I know of, but we simply felt that we wanted to renew our covenants.

This revelation given in 1830 was the one that revealed the priesthood to the children of men. I understood that it was a new and everlasting covenant. A new covenant of the last days, because it referred to us of the church and of the priesthood. I view it as being a new and everlasting covenant in 1830 when it was known and there is a reason for it of course.

Q.—Well, if it was a new and everlasting covenant, how could it be that it was not revealed until thirteen years after that time, and then called a new and everlasting covenant?

75 *A.*—Well, it is called a new and everlasting covenant in that case, because of the law of marriage under which it was given. That is as I view it, but of course I don't know, but that is my opinion. I do not know whether it is the covenant spoken of in the other revelation or not, but I should judge it was not.

76 *Q.*—But the other had already been revealed in 1830?

A.—Yes, sir, and there is a reason given for it, and why. There is a covenant,—a revelation perhaps that is not considered in the other.

Q.—And for that reason you were rebaptized when you came to Salt Lake; is that not true?

A.—No, sir, not with regard to that covenant. We were baptized because we felt like doing it. Renewing covenants before the Lord. It was not done because we felt that we had to do it, but because we felt disposed so to do.

77 *Q.*—Have you any other new and everlasting covenant outside that spoken of in section 65, which I read to you from Exhibit E?

A.—I have nothing to say about it.

Q.—Could there be two new and everlasting covenants at the same time?

A.—I have nothing to say about it.

Q.—Do you decline to answer the question?

A.—Well, with regard to what he said in that covenant on the patriarchal order of marriage, it is a covenant connected with the law on the patriarchal order of marriage, and it is not connected with the order of marriage as represented in the first covenant.

Q.—Is it the same one referred to in the 1835 edition of the Book of Doctrine and Covenants?

A.—I have nothing to say about it. There is the word of the Lord and I am not going to contradict it.

Q.—You say you do not feel disposed to contradict the word of the Lord?

A.—I would not be presumptuous enough to do that.

Q.—Then if this is a contradiction, if that is a new one, it is a change of the one spoken of in section 65 of the 1835 edition of the Book of Doctrine and Covenants, is it not?

A.—If you knew everything that is meant in that law, or by that law, and what the Lord meant by it, you could answer it and so could I; but I do not and I do not think you do either, nor do I think that any man does so he can explain it. Of course it is a different principle and of course it is connected with the new and everlasting covenant.

Q.—Well, now, when there was a change in the law, there ought to have been a change in the priesthood, should there not? In the New Testament that is taught,—in the Hebrew letter is it not?

A.—Well, all I will say is that if it is in there it is correct.

Q.—If it is true that there is a change in the law, there must of necessity be a change in the priesthood, must there not?

A.—I do not know; that is, if it is a law from God, I do not know. Of course if you have a priesthood from man and a priesthood from God, of course there is a change.

Q.—Well, was Paul talking of a priesthood from man or a priesthood from God?

A.—He was talking of a priesthood from God, of course.

78 *Q.*—I want to read you the sixth paragraph of this section,—section 132, in the book introduced as Exhibit A by the Defendants, page 464:—

> And as pertaining to the new and everlasting covenant, it was instituted for the fulness of my glory; and he that receiveth the fulness thereof must and shall abide the law, or he shall be damned, saith the Lord God.

And the seventh paragraph of the same section as follows:—

> Verily I say unto you, that the conditions of this law are these: all covenants, contracts, bonds, obligations, oaths, vows, performances, connections, associations, or expectations that are not made and entered into and sealed by the Holy Spirit of promise of him who is anointed both as well for time as for eternity, and that too, most holy by revelation and commandment through the medium of mine anointed, whom I have appointed on the earth to hold this power (and I have appointed unto my servant Joseph to hold this power in the last days and there is never but one on the earth at a time, on whom this power and the keys of this priesthood are conferred) are of no efficacy, virtue, or force, in and after the resurrection from the dead; for all contracts that are not made unto this end, have an end when men are dead.

Now does that abolish the new covenant that was referred to in the revelation of 1831?

A.—Well, there are three glories; celestial, terrestrial, and telestial. These are the three glories, and this is also in the revelations of God in the last days, and whatever is said in that new and everlasting covenant belongs to the celestial glory, and when you come to explain it, of course if you could understand these things, there would be no mystery connected with it.

79 *Q.*—Well, now, was the new and everlasting covenant able to raise them to the celestial or highest glory?

A.—Probably it would be understood if all the law of God was there.

Q.—Does not the section I have just read to you, Mr. Woodruff, teach that all the contracts entered into by parties who are not obli-

gated or who do not believe in that section I have read to you, upon their death, end,—marriage as well as others?

A.—Yes, sir, that is what I believe. That is what it says.

I was present when Brigham Young was made President of the Church. It was at Winter Quarters, I think in 1847.

Prior to that time he was the President of the Twelve Apostles. I think all of the Twelve Apostles, with the exception of William Smith, united their fortunes with the church that came west. He never came west with the church.

John E. Page did not come west. I cannot say that we had more than nine of the Twelve Apostles here at the conference at which Brigham Young was elected President of the Church. I do not know whether there were nine there or more than nine.

80 John E. Page, William Smith, and Lyman Wight were not at Winter Quarters with the church, nor David Patten. They were afterwards cut off from the church, I believe. They were members of the Quorum of Twelve at the time of the death of Joseph Smith.

At the death of Joseph Smith of course the direction of the affairs of the church fell upon the Quorum of Twelve, I mean the duty and obligation of leading the church. At the time of his death they were the highest quorum in authority. The Twelve were not all 81 appointed as presidents by Joseph Smith. They were ordained as apostles or members of the Quorum of Twelve. They were all appointed as prophets, seers, and revelators by Joseph Smith. Yes, sir, he called them all. The entire number of the Twelve Apostles were sealed, had these gifts sealed upon them by Joseph Smith. All the authorities in the church were ordained.

---

92 MELISSA LOTT WILLES, of lawful age, being produced, sworn, and examined on the part of the Defendants, testified as follows:—

I live now at Lehi. Before moving to Lehi, I lived here in Salt Lake. Prior to coming to Salt Lake, I resided at Nauvoo. I came here the same time that Brigham Young came through here to settle the Valley. I came with the emigrants at that time; that was in '48. I am a member of the Church of Latter Day Saints. The full name of the church is The Church of Jesus Christ of Latter Day Saints. I became a member when I was fourteen years of age, and now I am sixty-eight. It is over fifty years since I became a member, not far from fifty-four years. I have belonged to it ever since. 93 I lived at Nauvoo a number of years; I cannot state exactly how long we were there. We were there in Nauvoo about '46, I think, as near as I can come at it. The system of plural marriage was taught in Nauvoo the same as it is here in Utah. There is no change.

CROSS-EXAMINATION.

94 After we were driven out of Missouri, I was in Pike county, Illinois, for a while, stayed there until I went to Nauvoo. When I was

in Missouri, my name was Melissa Lott; after I was married it was Melissa Willes. After I was married in Nauvoo, it was Melissa Lott Smith.

Q.—Did you pass by the name of Melissa Lott Smith in Nauvoo?

A.—Well, I was called that in Nauvoo by my folks.

Q.—By anybody else?

A.—Well, I can't enumerate everyone that I know of; not expecting to be called on to give these things, I did not keep a particular record of it.

Q.—What law of the church existed at that time by virtue of which you took the name of Melissa Lott Smith?

A.—There has never been any change that I knew anything about since I knew anything about the church. I was acquainted with the rules of the church at that time, and have been ever since.

I was acquainted with Joseph Smith. I knew he had a wife living at the time.

His wife was named Emma Smith. I remember young Joseph Smith very well. I had a visit from him not many years ago. I lived at Lehi when he called to see me, the very place I do now.

Yes, sir, I said in my direct examination in answer to the questions from Mr. Hall, that the practice of plural marriage was taught me in Nauvoo by Joseph Smith and I also said that I was married to Joseph Smith, September 27, 1843. As nearly as I can remember or
95 understand it, the marriage ceremony at the time I married Joseph Smith, is as follows: "You both mutually agree to be each other's companion, husband and wife, observing the legal rights belonging to this condition, that is, keeping yourselves wholly for each other, and from all others during your lives." I married him under that ceremony, knowing at the time he had a wife living, his wife, Emma Smith.

96 *Q.*—Did he agree in that marriage ceremony to keep himself from his wife, Emma, for you?

A.—I cannot tell you. You will have to ask him that question. I cannot swear to his saying he would or he would not. I don't think he made any promise of that kind. Do not remember it if he did. I made a promise of that kind, but he did not. There were no children born as the fruit of that marriage. I married Mr. Willes in the year 1849. There have been children born as the fruit of that marriage. I did not go to church with Joseph Smith, was never seen on the streets or in public places with him as his wife during his lifetime.

I have been on the streets the same time he was, and in public places, but nobody said anything about my being his wife, nothing was said about that.

No, sir, I did not mourn for him as his wife at the time of his death nor afterwards. His first wife, Emma, was there at the time of his death, and mourned his loss as his wife.

I did not pass myself there in Nauvoo as one of the mothers of

97 young Joseph Smith. I was not one of his mothers. I respected him as a gentleman, and if he does not respect me as a lady, he is not the man I take him to be. I never saw any of the children of Joseph Smith in the Territory of Utah, except his three sons who were born prior to 1844. Joseph, Alexander, and David were his sons.

Yes, I said I was married for time and eternity. The ceremony you read there is only for time. There was no other ceremony used. It was all the same only it was for time and eternity.

That is not a matter of time alone, for I go on beyond time and I think there is such a thing as eternity. Very likely you will find out there is, too, before you are through with it. That was what was contained in the ceremony,—time and eternity.

All good Latter Day Saints when they are married calculate they are married for time and eternity. Yes, sir, that was the ceremony. Well, now, I would not say that the words *time* and *eternity* were used in the ceremony. I was never married to anybody else except Mr. Willes, and I had a family of children by him.

99 *Q.*—If you were married to Joseph Smith for time and eternity, how does it happen that you were afterwards married to Mr. Willes?

A.—I married him for time, and when we meet in eternity we will settle that there, for that is something that the laws of to-day have nothing to do with.

Q.—You married one for eternity, and one, the father of your children, you married for time?

A.—Well, that is a matter we will settle afterwards. That is a matter between God and myself, and not a matter that concerns this world.

I have belonged to the church a long time, and know most of the people who were in Nauvoo at the time I was there. Yes, sir, I said I was acquainted with the children of Joseph Smith. They were Joseph, Frederick, Alexander, and David. Frederick is dead. I met all of them. These were the children of Joseph and Emma Smith.

Q.—Well, have you met any other children of Joseph Smith besides those you have mentioned?

A.—I cannot swear to anything of that kind, no person is supposed to swear to anything of that kind, only those that belong to them.

Q.—Why can't you say those are all the children Joseph Smith had?

A.—I can't swear anything about whose children they are, can only swear to my own children and who their father is. I never met any other children of Joseph Smith except the ones I have named.

Of course if I had married a man who had a wife living when it was not the law of the church allowing a man to have two wives, I would have violated the church law.

107 *Q.*—I will ask you, Mrs. Willes, what time it was, if you can state it, that you met the present Joseph Smith at Lehi?

A.—I think it was about four years ago, but I won't say it was then, because I don't remember just when it was. He was here at the time and was there at my house, and then he went down to Beaver by himself and came back and called at my house again. It was at my house we had the conversation I have referred to.

Q.—I will ask you now if you did not state to Joseph Smith, the present President of the Reorganized Church of Jesus Christ of Latter Day Saints, at that time and place and in that conversation there at your house, in Lehi, in this Territory, that you were never married to Joseph Smith, but that you were sealed to him for eternity?

A.—I do not think that I told him any such a thing. I answered him just as I have answered you here to-day about it,—that I was sealed or married, whatever you have a mind to call it, and I quoted over the very ceremony as near as I could to him at the time, but to-day I cannot do it, for I am nervous here to-day.

Q.—And did you not tell him further at that time and place and on that occasion that his father never solicited you to have anything to do with him?

A.—I did not tell him anything of the kind; I told him the same as I have answered you here to-day, and he would not say but what I told him the same that I have answered here if he were here either. He would not say that I told him anything different if he were here to-day.

---

108 LORENZO SNOW, of lawful age, being produced and sworn on the part of the Defendants, testified as follows:—

My name is Lorenzo Snow. I reside at Brigham City, Utah Territory. Before that I resided in Salt Lake City. Before coming to Salt Lake City, I resided in Nauvoo, Illinois.

At the time I lived at Nauvoo, I belonged to the Church of Jesus Christ of Latter Day Saints. I held the position of what was called a High Priest in the church at Nauvoo.

I was acquainted with the practice of plural marriage while I lived there at Nauvoo, Illinois. It was the same then as it is out here in Salt Lake Valley,—I don't know any difference.

I am the President of the Twelve Apostles in the Utah Church at the present time. I have been an officer of the church for several years, about fifty-eight years. I think it was in September, 1849, here in Salt Lake City, I was ordained an apostle.

There was some talk in Nauvoo among the officers of the church about the practice of plural marriage. There was considerable talk. It was not public talk. I have no recollection of the practice being talked of publicly.

CROSS-EXAMINATION.

112 In the fall of 1839, I was sent on what was known as an Eastern or European mission to represent the doctrines of the church. I was

sent out to preach the first principles of the church. We were confined to preaching first principles when we were on missions.

There was no law with reference to marriage when I first went out on that mission in 1839. No, sir, there was no law with reference to marriage. I believe there was some instruction given that was embraced in the Book of Doctrine and Covenants, that is all I recollect of. Yes, sir, there was a creed of the church at that time. You will find it in the Book of Doctrine and Covenants, I guess. It was the creed governing the church at that time.

I did not teach when I went out that time that a man could have more wives than one. No, sir, that doctrine was not taught. It
113 would have been considered that a person teaching such doctrine at that time would be liable to experience church discipline.

I did not marry anybody while I was on that mission. There was no special marriage ceremony that I am aware of at that time; no, sir, there was none provided.

I returned from that European mission in the spring of 1843, about the middle of April. I said in my direct examination that about ten days after I returned from that mission, I had a private interview with Joseph Smith. In that private interview was the time when he told me he had taken my sister as a wife.

He did not say she was taken as a wife and married to him, he said she was sealed to him, sealed to him for eternity. I was not acquainted with the practice of sealing at that time. I had never heard of it before.

I never saw the ceremony of sealing performed in the days of Joseph Smith. I never knew anything about the practice of sealing during the days of Joseph Smith. He didn't tell me anything about
114 it at the time I had this conversation with him. He told me at that time that other parties had been sealed to him for time and eternity, but he didn't name any of them but my sister, Eliza R. Snow. That was the first time I ever heard of sealing.

I lived in Kirtland in 1835, a few months before the convening of the General Assembly. I was not there at that time. The book handed me was printed in 1835. I cannot say whether I ever saw it before or not, suppose I have seen one similar to it.

I would think that this was the authorized work of the church at the time, but I would not swear to it. I would think that was recognized by the church as a book published by the church. It is the
116 Book of Doctrine and Covenants, 1835 edition. Section 101 is the section that refers to marriage.

That was the doctrine and law of the church upon the question of marriage at that time. When I said awhile ago that I did not know of any law on the question of marriage, I thought you had reference to the ceremony that was to be used when two persons came together to be married, and I didn't remember the ceremony, and I don't think that embraces the ceremony at all.

When I was sent out on a mission in 1839, I received no instruc-

tions to teach plural marriage or plurality of wives. No, sir, I was a bachelor at the time, and never thought anything about marriage at all; I never expected to be married at that time. I never once heard of it until I heard of this plural marriage business.

I was not acquainted at that time with the revelations in the Book of Doctrine and Covenants. I am not now acquainted with all of them. I was sent out to preach the first principles of the church. I was instructed to preach the first principles only.

Joseph Smith represented the doctrine of the church. In Great Britain I represented all that the circumstances required in the situation I was placed in at various times. I represented the doctrines of the church so far as first principles were concerned, such as faith, baptism, and the like.

I said I did not understand there was any special ceremony and I say now that I don't understand there was any such a ceremony. After reading the section on marriage to which my attention is called, I answer that I told you before that there might have been something spoken of on that subject, but I didn't remember particularly what it was, don't remember as to the precise words that were used when the woman stood up with the man to be married.

I do not know that there was any particular necessity of strictly conforming to anything of that kind. I was an elder in the church at that time, yes, sir. Elders were authorized to perform the marriage ceremony, but I told you that I had never married anyone because I was a bachelor and I did not believe in it, so far as I was concerned. The revelation in section 13, paragraph 7, Exhibit E, is as follows:—

118 And again, I say, thou shalt not kill; but he that killeth shall die. Thou shalt not steal; and he that stealeth and will not repent, shall be cast out. Thou shalt not lie; he that lieth and will not repent, shall be cast out. Thou shalt love thy wife with all thy heart, and shalt cleave unto her and none else; and he that looketh on a woman to lust after her shall deny the faith, and shall not have the Spirit, and if he repents not, he shall be cast out. Thou shalt not commit adultery; and he that committeth adultery and repents not, shall be cast out; but he that committeth adultery and repents with all his heart, and forsaketh it, and doeth it no more, thou shalt forgive; but if he doeth it again, he shall not be forgiven, but shall be cast out. Thou shalt not speak evil of thy neighbor, nor do him any harm.

I recognize that as the doctrine of the church in 1839 at the time I belonged to it, and it has always been and is to-day the doctrine of the church; it is the doctrine entirely and fully. I do not know whether that is the doctrine that was taught by Brigham Young here in the Valley or by the church here after his time on the marriage question, or not.

119 Let me read that again: "Thou shalt love thy wife with all thy heart, and shalt cleave unto her and none else."

Yes, sir, that is right, that doctrine was taught. It was taught here in the Valley by Brigham Young. I believe it fully and entirely; I indorse that absolutely.

I believe Brigham Young taught that, and the polygamous revelation also. I do not know about that; let me see it again. Yes, sir, that is right. I think that when a man has a dozen wives he can cleave to them all and love them all. I apprehend there is no disagreement between the revelation of 1843 or '44 and the revelation of 1835 on marriage, there is no disagreement or difference between them when they are explained in connection; I believe, sir, that they are in harmony.

Q.—Does the revelation of 1843 that was accepted by the church to which you now belong in 1852 contain the same teachings on the question of marriage as are contained in these sections you have read, 1835 edition of the Book of Doctrine and Covenants?

A.—Well, sir, I will answer that question right directly by saying that I think it does. Paragraph 3, section 65, in this connection, the same edition of the Book of Doctrine and Covenants, being the 1835 edition:—

> And again, I say unto you, that whoso forbiddeth to marry, is not ordained of God, for marriage is ordained of God unto man: wherefore it is lawful that he should have one wife, and they twain shall be one flesh, and all this that the earth might answer the end of its creation; and that it might be filled with the measure of man, according to his creation before the world was made. And whoso forbiddeth to abstain from meats, that man should not eat the same, is not ordained of God; for behold the beasts of the field, and the fowls of the air, and that which cometh of the earth, is ordained for the use of man, for food, and for raiment, that he might have in abundance, but it is not given that one man should possess that which is above another; wherefore the world lieth in sin; and wo be unto man that sheddeth blood or wasteth flesh, and hath no need.

Yes, sir, I recognize that as a teaching of the original church.

Q.—Was that the same as the teaching of the purported revelation of 1843 adopted by the church to which you belong in 1852?

A.—One is more extensive than the other, but they do not disagree. The last one is the more extensive of the two,—the one that allows a man to have a dozen wives if he sees fit. It is considerably enlarged, like it was in the days of Jacob, when he had four or five wives.

120 I lived in Nauvoo in 1843; was traveling a good deal of the time from one place to another, but off and on I was there a part of the time. Was there most of the time, I might say, from '43 until we moved to the Valley. I don't know when I did first see the purported revelation on plural marriage. It was presented to the church here in Salt Lake City, in 1852.

I could not say whether it was after it was presented here by Brigham Young to the church that I saw it. I was not here when it was presented. I was in Italy, I believe, in Italy or in France. I had not seen it up to that time, of course. I do not remember where nor when I saw it; it was printed, however.

I never saw the original, if that is what you want to know. I never saw it in any other form except in printed form. I cannot say positively that it was ever printed in any other form before it was printed here in the *Journal of Discourses;* do not know whether

it was or not. At any rate, I never saw it until after it was printed.

I do not think it was ever presented to the church at Nauvoo for acceptance. It was not presented to my knowledge. It might have been presented to the church and I not know anything about it; I was away so much of the time that I hardly knew what was done, but I think I should have heard of it; and I have no recollection of hearing of it at all. It never was presented to the church at Nauvoo that I ever knew anything about.

Up to the time of the presentation of that revelation to the church and its acceptance by the church, the law of the church on marriage was the same as you have read, and which I referred to in the 1835 edition of the Book of Doctrine and Covenants, Exhibit E. That was the law of the church up to the time of the purported revelation and its acceptance by the church; yes, sir, that is true.

And a man that violated this law in the Book of Doctrine and Covenants, 1835 edition, until the acceptance of that revelation by the church, violated the law of the church if he practiced plural marriage. Yes, sir, he would have been cut off from the church. I think I should have been if I had.

Before the giving of that revelation in 1843 if a man married more wives than one who were living at the same time, he would have been cut off from the church. It would have been adultery under the laws of the church and under the laws of the State, too.

121 I am one of the apostles in the church at the present time. The book you now hand me is the Book of Doctrine and Covenants. It is authority in the church at the present time.

Yes, sir, in section 132 here in Defendant's Exhibit A, is a revelation on the eternity of the marriage covenant, including plurality of wives, given through Joseph the Seer, in Nauvoo, Hancock county, Illinois, July 12, 1843. That is the title of the revelation. I recognize that as one of the laws of the church at the present time.

Q.—I will ask you now, Mr. Snow, why it was that in this edition of the Book of Doctrine and Covenants, this article on marriage, as you read it in the 1835 edition of the Book of Doctrine and Covenants and in all subsequent editions, up to the time of this edition of Defendant's Exhibit A, was taken out and this revelation or purported revelation put in its stead?

A.—That is, I take it, you want to know why this principle of plural marriage was inserted instead of the principle of single marriage?

Q.—Yes, sir, why did you take out one and put the other in?

A.—I cannot tell you, for I did not do it, nor I cannot tell why.

Q.—Was it not because this taught or had changed the order of marriage in the church?

A.—Well, it is a fact that the order of marriage was changed, but whether that was the purpose of the substitution or not, I do not know.

122 *Q.*—The order of marriage was changed, and the old order eliminated; is not that the fact?

A.—Well, it was changed or extended. It was changed from the one to the other.

Q.—It was changed from monogamy to polygamy, was it not?

A.—Yes, sir, you might say it was if it suits you. It was extended from monogamy to polygamy.

Well, now, this matter of plural marriage is not extended to everybody and was not. Everybody did not understand it at all. It was limited in its scope, and it was not everybody who was prepared to receive this doctrine.

Everybody is not prepared to receive it, and the doctrine was made known to certain parties under certain conditions so it was very limited in its scope.

Yes, sir, it was the introduction of another system besides the original one, or it was the extension of the principle of one wife to more than one wife.

This polygamous revelation would not prevent any man in the church from having more than one wife if he wanted to.

Q.—Then it was extended to everybody who chose to avail themselves of its provisions, was it not?

A.—I said plural marriage.

Q.—Under the operation of this law of plural marriage or this revelation, every man that wanted to do so, could have more than one wife?

A.—No, sir, for I think there are lots of men who ought not to have *one* wife.

Q.—When you was a bachelor one wife did not extend or include you, because you did not want one?

A.—No, sir, and you would not want it, too, if you did not want her. That is the way I understand this polygamous revelation,—something that way.

Q.—That is, you state that if a person had been married or sealed by this revelation, according to your understanding, that is, if they
123 had been married according to the provisions of this polygamous revelation prior to the year 1843, they would have violated the laws of the church and been guilty of adultery?

A.—Yes, sir.

Q.—You state now that Joseph Smith was sealed or married to your sister in April, 1843, and this so-called revelation was given in July, 1843?

A.—Well, the time I said it, it was all right. According to my understanding of this new covenant, the woman is sealed to the man and not the man to the woman, and I stated that Josepn Smith took my sister for a wife when he had a wife living, and that was prior to the giving of this revelation.

Q.—Well, what kind of a position did it put your sister and Joseph Smith in?

A.—It put them in a first-rate, splendid condition for time and eternity.

Q.—I will ask you, Mr. Snow, if you ever saw the letter of your sister, Mrs. Snow, to Mr. Daniel Munns, of Kansas, stating that she never was the wife of Joseph Smith?

A.—I am not aware of that.

I don't know whether this revelation of July 12, 1843, was given to the people of Nauvoo or not. I said that I never saw it until after it was in print, and that was long after the time I lived in Nauvoo. In 1852, I think I was in Italy or France. I was a member of the church at an early date in Kirtland. In 1836 that was my first connection with the church.

To my knowledge this purported revelation of 1843 was never brought before the church for acceptance during the lifetime of Joseph Smith. It was never brought before the public in any way before the death of Joseph Smith; I do not think it was ever pre-
126 sented to the church for acceptance until 1852 in Salt Lake. Now if a revelation should be given and it was not accepted by the church or presented to the church, it would not be binding upon the church, because the church as a church would not know anything about it if it was not presented formally to it.

Q.—Well, suppose these half dozen men and women should receive a revelation that should be contrary to the laws of the church as accepted by the church, what would be the duty of these half dozen men and women in that case?

A.—Well, I should think it would be rather unpleasant for them, in my opinion it would place them in rather an unpleasant position.

I do not know that Moses went up on the mount in the wilderness to receive the law and that he was commanded to present it to the people for acceptance before it was binding upon the people, and I do not know that the people were forced to answer whether they accepted it or not. I do not know about that. Yes, sir, I am a member in this church here in Utah, and I am an apostle; but I do not know whether it is a fact or not that the people were commanded to accept the law that Moses got on the mount before it was a law to them.

Q.—Well, is it not a fact that it was a rule in the church that if anybody should undertake to follow a principle that was not accepted, and was not accepted as a principle and true doctrine in the church, that they would be violators of a law of the church?

A.—Yes, sir, but there are exceptions to all law. Joseph Smith and the people constituted the church at Nauvoo. I mean by the people, the members of the church throughout the world as constituting the church.

No, sir, the church never accepted the revelation on polygamy during the lifetime of Joseph Smith, for it was not during his lifetime that it was presented to the church for acceptance. It was

presented to the church here at Utah and accepted. But it was not presented to the church in the time of Joseph Smith. I do not know that this revelation on polygamy was published in July, 1843; it was
129 given in July, 1844; Mr. Cannon, wasn't that the time? I said that to Mr. Cannon because I thought his memory was better than mine. I don't know when it was published.

I think I left Nauvoo in the spring of 1847. I am acquainted with the facts with reference to the breaking up of the church there at Nauvoo, and with reference to two of the First Presidency being killed; but of course I was not there at the time.

I was not present at the reorganization of the quorums afterwards at Kanesville, or Council Bluffs, Iowa. I have been a member of this church fifty-six years.

I do not know that the church broke up in 1844; do not know anything about that. I never heard of this church breaking up. I have read that the claim was made that it broke up, but if it did I am not aware of the fact.

I have heard that a portion of it went to Texas under Lyman
130 Wight, and another portion of it went to Pennsylvania under Sidney Rigdon, and I understand that another portion of it went to Beaver Island under James J. Strang; knew it from hearsay, and I understand there was a large portion of the people that belonged to the church at the time of the death of Joseph Smith who did not go with any of these factions. I know there is the Josephites.

By Mr. Cannon: "They had no existence at that time; that is, the Josephites did not have any existence at that time."

By Mr. Kelley: "Let Mr. Cannon prompt you, that is all right for him to do so, but I want the record to show that he does prompt you."

Yes, sir, it is my understanding that a large proportion of them did not come to Utah at all.

Brigham Young took the Presidency of the Church after the death of Joseph Smith. He was appointed to the position and accepted by the people. That was one way he was made President. He was not appointed by Joseph Smith as the President.

I do not understand that Joseph Smith designated him as his successor, and Brigham Young never claimed that he did. At the time Joseph Smith was killed, the church recognized that the authority devolved on the Quorum of Twelve Apostles. That was the position of the church at that time,—that the entire authority of the church rested upon the Twelve. Brigham Young was made President of the church afterwards.

Q.—Now I will read you the section given in the revelation of February, 1831:—

Verily, verily, I say unto you, that none else shall be appointed unto this gift, except it be through him, for if it be taken from him he shall not have power, except to appoint another in his stead: and this shall be a law unto you, that ye receive not the teachings of any that shall come before you as revelations or commandments: and this I give unto you, that you may not be de-

ceived; that you may know they are not of me. For verily I say unto you, that he that is ordained of me shall come in at the gate and be ordained as I have told you before, to teach those revelations which you have received, and shall receive through him whom I have appointed.

Now, was Brigham Young appointed through Joseph Smith to receive revelations?

A.—Well, it was, it has been understood that, it is pretty well conceded, and the people of the church recognize it,—that the church recognizes,—that when Joseph Smith was martyred there in Carthage, that the entire authority devolved on the President of the Quorum of Twelve, and upon the Twelve Apostles. After the death of Joseph Smith it was understood that the authority to lead
132 the church devolved on the Quorum of Twelve. Brigham Young was never set apart by Joseph Smith as his successor that I am aware of, and he does not claim that he was that I am aware of. There are many things in the revelations of the Old and New Testaments that seem to conflict unless they are reasoned out, and so it is with that.

1 You will find statements in both the Old and New Testaments, and afterwards you will find changes are made.

Now there is the instance of Moses where there was a law made or given, and afterwards circumstances arose that rendered a change necessary, but it was not in Joseph's time; the necessity for the change arose after Joseph's time. There may have been a change in this, and I think the Lord has a perfect right to make a change at any time he sees fit or pleases to do it; and we find always, from the days of Adam down to the days of John the Revelator, that there were the most extraordinary changes made, and it was so in this case, for the Lord made them in this case.

Q.—Has he contradicted his word flatly at any time in any of these changes, Mr. Snow?

A.—Well, it says in one passage in the Scriptures,—well, I do not know that he has. He never contradicts himself. It may seem a contradiction to men, but in reality there is no contradiction.

135 *Q.*—And now, notwithstanding the fact that the church at the time you joined it, permitted a man to have but one wife, and this church here in the Valley permits a man to have as many as he wants, still you claim that it is the same church?

A.—Yes, sir, the same church that was in 1836. It has always been the same church. It has the same doctrine in reference to marriage and more. Well, it is changed, the law in reference to marriage,—it is extended. The law has not been changed, it has only been extended.

138 *Q.*—For the purpose of refreshing your memory upon a point you have just referred to, to the effect that there was no law, rule, or usage of the church with reference to the bringing of revelations before the church for acceptance, I will ask, Mr. Snow, did you state that to be the fact?

A.—Well, as a general thing that was not done. There are certainly exceptions when they are brought before the body of the church.

Q.—Don't you know that there was a usage of the church to that effect,—now that you come to think of it, and that the revelations were presented to the General Assembly at Kirtland and accepted?

A.—Yes, sir, I know it was also done at other places, at least I have heard that it was done now that you mention it. I remember hearing it, but I was not present, and what I know about it is hearsay. That was the rule, yes, sir.

Q.—I will read to you from the *Times and Seasons*, volume 5, page 649, published September 8, 1844, as follows:—

> There is a way by which all revelations purporting to be from God through any man can be tested. Brother Joseph gave us the plan, says he, when all the quorums are assembled and organized in order, let the revelation be presented to the quorums, if it pass one, let it go to another, and if it pass that, to another, and so on until it has passed all the quorums: and if it pass the whole without running against a snag, you may know it is of God. But if it runs against a snag, then you may know it wants enquiring into: you must see to it. It is known to some who are present that there is a quorum organized where revelations can be tested. Brother Joseph said, let no revelation go to the people until it has been tested here.

I will ask you if you recognize that as a rule of the church?

A.—Yes, sir, that was the doctrine as I told you before. That was the rule. That was the rule at that time, always was the rule of the church prior to the death of Joseph Smith.

Q.—Now, is a revelation binding upon the church before it is made known to the church?

A.—No, sir.

143 At the time of the reorganization at Kanesville or Council Bluffs, Brigham Young was elected to the Presidency, and Heber C. Kimball and Willard Richards were selected as his counselors. These three men formerly were members of the Quorum of Twelve, and there were Three of the Quorum of Twelve who apostatized; that left nine in all who went with Brigham Young to Kanesville or Council Bluffs; then out of that nine, Brigham Young, Heber C. Kimball, and Willard Richards were taken, and of course that left six of this Quorum of Twelve.

The Quorum of Twelve of course was disorganized, as it existed in Joseph's day, if you look at it in that way, but it is my understanding that others were appointed at the same time.

That did not disorganize the quorum so that it could not transact business, because there was a Presidency that acted with the quorum for the transaction of business. That was done through a revelation. The law is in the revelation.

Q.—Where is it? I mean the revelation calling these individuals to the Presidency.

A.—Do you want to know where it is found,—in what book it is found?

Q.—Certainly.

A.—Well, it is not found in any book, and I still say there was a revelation.

144 I know it, just as well as I know there was a Presidency formed. I know that because where there is a matter of that importance, a person never receives a position of that kind unless there is a revelation calling them to it. A person never receives an appointment of that kind unless his appointment is dictated by the Spirit of God.

After taking the three out of the Quorum of Twelve, that left six members of the quorum of Apostles. I think that would still form a quorum. It would form a quorum in connection with the First Presidency, and further I will say that if there was not one single one of these six apostles left, the First Presidency could transact business without them.

Of course six persons would not form a Quorum of Apostles independently of the First Presidency. The six themselves could not do business as a quorum for the church, but they could do business in connection with the First Presidency of the church just as well as if it was full. They could do that because the First Presidency has a right to take part and preside over the affairs of the church, and the First Presidency could act without them; but the remaining six could not act as a quorum without the coöperation of the First Presidency.

---

147 LYMAN O. LITTLEFIELD, of lawful age, being produced, sworn, and examined on the part of the Defendants, testified as follows:—

I reside at Smithfield, Cache county, Utah. I have resided there seventeen or eighteen years. I resided here in Salt Lake City previous to moving to Logan. I came to Utah Territory in 1859. I came from Nauvoo to Utah. Nauvoo is in Illinois, and I came from there here in 1859.

I think I went to Nauvoo first in about 1840 or '41, '41, I think, and
148 I resided there until the church moved from there in '46, so I lived there from 1841 to 1846. I was a member of the Seventy's Quorum. I was one of the Presidents of a Seventy at that time, and am still, I may say.

I was acquainted with the fact that the doctrine of polygamy was taught there at Nauvoo, was understood by some people, but it was not taught to the church; it was taught privately so that a great many people understood it, and knew it was taught and practiced, too.

It was not taught publicly from the stand, but it was taught so that the people, or a great many of them, understood that doctrine, and some of them practiced it.

I never heard it taught from the stand. I knew it was taught and practiced secretly, and was not given to the church as a principle according to the best of my knowledge in the days of Joseph Smith.

I was taught that doctrine or principle myself, and conversed upon

it with different parties, but I never was taught that principle by Joseph Smith personally, but the doctrine was talked of between myself and other parties.

149 I have conversed with both ladies and gentlemen on that matter. Some of the gentlemen were elders in the church. The ladies, of course, did not hold any offices. The doctrine of plural marriage as I heard it in Nauvoo and as taught in the revelation published in the Book of Doctrine and Covenants by the Utah Church is the same, identically the same, I think.

CROSS-EXAMINATION.

150 Before going to Nauvoo, I lived in Far West, Missouri. Went from Far West to Quincy first, and then I went to Rushville, and published a paper there, and from there I went to Nauvoo. Before I went to Far West, I lived at Liberty, in Clay county, Missouri. I went from the State of Michigan to Clay county. I was never in Jackson county. I became a member of the church in 1844. I am

151 going to tell the place if you will just give me a chance. I became a member of the church in Clay county, in Missouri. That was where I was baptized. That was in 1844. Then I went to Quincy, Illinois, and then to another town in Illinois and published a paper, and then to Nauvoo.

I do not know as I can tell you what the doctrine of the Church of Jesus Christ of Latter Day Saints was with reference to the question of marriage from 1830 up to 1844. I suppose they had some doctrine on that subject. There was no principle or revelation or anything of that kind on the question of marriage in the Book of Doctrine and Covenants up to 1844 that I was aware of.

I was a President of the Seventy before 1844; yes, sir, before 1844 I was, and had a copy of the Book of Doctrine and Covenants and had read it. I don't think there was a revelation on the question of marriage in the Book of Doctrine and Covenants. There was a

152 ceremony on marriage that allowed one man to have one wife, but that was not a revelation. There was no revelation outside of the ceremony on marriage that I think of now. That is the only thing I can think of that you would call a revelation on marriage.

Yes, sir, I recognize that which you have read as a part of the Book of Doctrine and Covenants, Exhibit E. I recollect that now; I have looked at it a great many hundreds of times. The laws of the church up to 1844 were the laws contained in that book. There have been a great many editions of the Book of Doctrine and Covenants published. When one volume had gone out of print, they would reprint it. I cannot give you any editions that there has been a reprint of. I do not know of any Book of Doctrine and Covenants that was published prior to 1852 that contained any other revelation

153 on the question of marriage than is contained in the edition of 1835.

I don't know when the purported revelation on the question of polygamy was published, for the reason that I have not posted my-

self. I was not here in Salt Lake at the time it was presented to the church. I was in Nauvoo when I first saw it. Prior to the death of Joseph Smith. I cannot tell you the date.

Q.—Did you see it in 1840?

A.—I do not know what time it was, further than it was previous to the death of Joseph Smith.

Q.—You were taught the principle of polygamy in 1839 in Nauvoo; is that not a fact?

A.—I cannot say, for I did not keep any dates of it. I cannot say what time it was.

Q.—Well, were you not taught it previous to 1840?

154 *A.*—I cannot say; I have told you all I knew about it with reference to dates, and there is no sense in your asking me these questions. I never heard Joseph Smith teach it or preach it. I never heard him say anything about it personally or mention it.

Q.—Did you ever hear any one of the apostles preach it or teach it in Nauvoo prior to 1844? Come, answer the question?

A.—I am in no hurry. I do not want to be hurried. I am getting pretty old, and I want to take my time to answer these questions, and think over these occurrences that happened so long ago. I could not say, but I think I have. I cannot give you the date, but it was previous to the death of Joseph Smith. If I heard anybody, it was John Taylor, but I cannot tell you the year.

Q.—Don't you know that John Taylor was not in Nauvoo from 1839 to 1843?

A.—Well, I know this, that he was there considerable of his time. I boarded at his house considerable of the time and was familiar with him and his family, but I cannot tell you when it was.

Q.—Don't you know that he was in charge of the English mission from 1839 to 1845?

A.—I do not know, and as to my past recollection about that, I have nothing to say. I do not say that I heard John Taylor preach the doctrine of polygamy at any time from 1839 to 1845. I think I did.

Q.—You were not taught in Nauvoo previous to 1840 that you could have more wives than one, were you?

A.—Well, I understood that that was the privilege. I did not say in 1840. I cannot tell you whether it was in 1841, nor how long before the death of Joseph Smith it was. I have told you sufficient to answer the purpose. I do not know that I could tell the year. I do not know that I could come within two years of it.

Q.—Were you taught it in 1839? Answer the question, yes or no, and have done with it.

A.—I told you that I never was taught it. I thought I told you
155 that at the start, that I never was taught the practice of polygamy. I simply said that in a conversation with President John Taylor I learned that that practice was in existence.

He did not announce it publicly. I did not keep any date of the

time. I was a married man at the time. I was married according to the laws of the State of Illinois, in Quincy. Was married by a minister of the Church of Jesus Christ of Latter Day Saints. I cannot tell you the year. It was about 1840.

I was not a member of the Quorum of Seventy at that time. It was after I went to Nauvoo that I held that office. I don't know that I held any office at the time I was married. I was appointed Presi-
159 dent of the Seventy while I was at Nauvoo. As near as I can tell you, it was about '42 or '43.

Joseph Smith occasionally attended the meetings of the Seventy where I presided, but not regularly. He attended sometimes for the purpose of instructing the Quorum of Seventy, not very often. He came to instruct the quorum in the laws of the church, and the principles of the gospel.

I do not know that he made a special point of instructing the quorum in the rules and regulations of the church, but he did instruct us in the principles of the gospel. I would naturally suppose that he would instruct us in the rules and regulations of the church, but I have no memory of that particular subject.

160 He did not give us any instruction on the question of polygamy. I did not say he did. He never did. Joseph Smith never said a word about it in my presence, and I told you that a long while ago. He never instructed me when in the Quorum of Seventy to my knowledge. I understood that that was the doctrine. I was taught it by somebody, but I did not say that I understood it as early as 1843. I said I heard it before the death of Joseph Smith during some of those years. It was after I became a member of the Quorum of Seventy.

Joseph Smith was the highest officer in the church at that time, and the chief teacher in the church. When I heard this question of plural marriage or polygamy advanced, I did not even go to see him about it to see whether it was correct or not. I took no pains to find that out at all. No, sir, I did not.

I talked with a good many other people about it. I never heard it preached to any congregation publicly or privately by any minister before the death of Joseph Smith.

Never heard it presented to the church, and never heard of its being presented to the church in the lifetime of Joseph Smith.

Never heard it presented to the church privately by anybody prior to the death of Joseph Smith.

I never heard it presented to the church either publicly or privately prior to the death of Joseph Smith, by Joseph Smith or any of the authorities of the church. I never heard it preached publicly or privately in his day by any of the authorities of the church.

Q.—Did you ever hear it presented to the church either in public or in private by any officer in the church prior to the death of Joseph Smith?

161 *A.*—No further than I have stated. I cited Bro. John Taylor, but

I am not positive about that or about what he said to me. I just heard the rumor that there was that kind of a practice or revelation. I saw the revelation on polygamy prior to the death of Joseph Smith. I cannot tell you in what shape it was. I do not know whether it was written or printed. Do not know whether it was in book form. Do not know whether it was in pamphlet form. I cannot say what shape it was in, but I understood it perfectly well. I do not know who presented it to me. I either read it myself or heard it read.

162 *Q.*—You read it, you say?

A.—I understood about it.

Q.—Did you hear it read?

1. *A.*—I understood all about it at that time.

Q.—Well, did you hear it read; that is the question?

A.—Well, I don't know; I would not say.

Q.—Now, don't you know you did not?

A.—Well, now I am in no hurry, just give me time to answer these questions, and we will get along all right. I would not swear positively that I ever heard it read.

Q.—Did you ever see it prior to Joseph Smith's death in any shape or form?

A.—I heard it talked of.

Q.—Well, did you ever see a paper on which it was written or printed?

A.—As positive testimony, I cannot swear to that; I cannot consistently do it. I do not say that I saw it as a fact.

A.—What made you say a while ago that you saw it, and either read it yourself or heard it read?

A.—No, sir, I did not say I did. I don't know that I said that. I do not swear that I said I read it myself or heard it read. I say that according to my best recollection I have no recollection of reading it or hearing it read.

I heard it frequently referred to. It was not in the shape of hear-
163 ing it taught. It was merely in the shape of conversations between myself and other parties. These conversations occurred at various times, but I never had any such conversations in any meetings. I cannot say that they were ever had on the street or in any private house. I cannot say where the conversations occurred, but I know it was in private interviews.

No, sir, I would not say it was not the John C. Bennett affair. That affair came up frequently, but whether it was in connection with this revelation or not, I could not say.

That revelation has been taught publicly here in Utah. I have heard it taught publicly. I have heard it taught from the stand to public congregations.

I have frequently heard it referred to by the elders of the church here in Utah, and have heard Brigham Young proclaim it from the stand publicly at the time he was the President of the Church, and the present President of the Church, Wilford Woodruff.

164 I have heard President John Taylor proclaim it from the stand, and George Q. Cannon. They have all taught the principle of polygamy publicly and openly from the stand here in Salt Lake, and according to my understanding, it has been one of the doctrines of the church since I have been here in Utah.

I came from Nauvoo here in 1859. I cannot tell you where I saw the first published statement of the pretended revelation on polgamy. I cannot remember. I cannot fix the date. I do not know that it was published before 1876. I would not say whether it was or not. It is sufficient for me to know that it was there, and always has been since it was first put there. I do not know whether the pretended polygamous revelation was contained in the 1835 edition of the Book of Doctrine and Covenants. I cannot tell you when it was first published, nor can I tell whether it was in the 1845 edition or not. I never bothered myself about it at all. I do not know anything about whether it was in the 1852 edition that was published here in Salt Lake City. I know it is there, and that is sufficient; but I don't know when it was first published.

Yes, sir, I conducted the correspondence between myself and Joseph Smith, now of Lamoni, Iowa, but previously of Plano, Illinois, and he might have in that correspondence cited me to the fact that the first time this pretended revelation was presented to the church was in 1852. I do not know that I replied to it. I replied to his letter, yes, sir, and to a great many items in his letter, but I do not remember any particular item that I replied to.

165 *Q.*—Did you in your correspondence with Joseph Smith in reference to this matter, in relation to this revelation on polygamy, did you not in that correspondence between yourself and Joseph Smith, the President of the Reorganized Church of Jesus Christ of Latter Day Saints, say that Brigham Young in a discourse here in the city of Salt Lake, claimed that there was no man on earth ever saw that revelation until the time when it was presented here in 1852, or that had a copy of it?

A.—I do not remember that.

Q.—Could you swear you did not write that?

A.—I cannot say. I do not know whether it is in the letter or not. I do not remember anything about it. The correspondence speaks for itself, and is still in existence, I suppose.

Q.—Well, if it is in there, is it true?

A.—I do not remember if it is in there or not. I remember nothing about it.

Q.—Well, if it is in there, is it true?

A.—The correspondence speaks for itself, and it is still in existence.

Q.—If that statement is in the reply that you wrote to Joseph Smith is it true?

A.—I guess you are familiar with it.

Q.—Well, yes, I guess I am just as familiar with it as you are, just

exactly, although you are a good many years older than I am. I have no doubt but that you know right well what is in it, but if you are willing to go on record as evading the question in that way, all right.

167 I was in Nauvoo at the time Joseph Smith was killed. I say I think it was in '41 or 42 that I went to Nauvoo, or '43, somewhere along there was the time I went to Nauvoo, that is my memory, but I guess it was about '41. After I first went there, I was sent on a mission to England. I went in 1838, I think it was. John Taylor was in England at the same time.

1

Q.—Was it before you went to Nauvoo that you went on your mission to England or afterwards?

1.

A.—I went to Nauvoo when they were in Winter Quarters there, and while the camp was in Winter Quarters, I was sent to England on this mission. I do not remember the date exactly, but it was in 1848 or '49, I think it was in '48. I was never on but one mission before Joseph Smith's death, and that was down in Madison county, Illinois. That was a short time previous to his death, about a year, perhaps, or a year and a half, or something like that. I remained on that mission just a short time, a few months.

Q.—You taught the plural wife doctrine while you were on that mission?

A.—No, sir, I cannot say I had heard it previous to going on that mission. I presume I had, but I would not say whether I had or not, but I think I had heard of it before that. I did not teach it to anybody for the reason that I did not have any right to teach polygamy.

The practice of polygamy here in Utah has been abolished by a vote of the church, but the church went into it without any vote.

Q.—I will ask you if it was not a universal rule and law of the church that all revelations in order to become law must first be presented to the church and adopted by the church?

1

171 *A.*—I think that has been the universal practice always of the church. It has always been the law. I do not know any exception to that rule.

I think it is sixty miles from this city to where I live.

Q.—Who notified you to appear here as a witnness?

A.—I am willing to answer the question if I am compelled to answer it.

By the examiner: "Answer the question."

Answer of Witness: Wilford Woodruff, the President of the Church here in Utah; he notified me to appear. The notice was in typewriting.

I have no objection to producing the letter in the world, but an objection was made by the counsel on the other side, and I guess I will avail myself of my privilege and refuse to produce it. Under the circumstances, I decline to produce it. I do not know why I de-

cline,—do not know why there should be any objection to my doing so. I do not know of any reason why I should not produce the letter.

The reason for not producing this letter is simply because of the instructions of the counsel not to do so. That is the only reason why I refuse,—simply and solely for the reason that Defendant's counsel advises and instructs me not to produce it while I am on the witness stand. I came here because I was requested to by Wilford Woodruff to come and testify as a witness in this case.

---

177 JOSEPH C. KINGSBURY, having stated that he was of lawful age, refused to take the ordinary oath to "tell the truth, the whole truth, and nothing but the truth of his knowledge of and touching the matter in controversy," but was sworn by affirmation, and testified as follows:—

I live here in Salt Lake City. Before coming to Salt Lake, I resided at Nauvoo, in the State of Illinois. I came to Nauvoo, I think in 1840. I left there in 1846, in February. I belonged to the Church of Jesus Christ of Latter Day Saints at Nauvoo. I held the office of a High Priest. I was ordained in Kirtland during the year 1834 or '35. I hold the office of a High Priest at the present time; have held it continually ever since that time,—of course I have. I have continued right with the church in that office from that time to this. I held the office of High Priest in the second ward while I was here for a while.

Joseph Smith taught me the principles of polygamy. He gave me to understand with his own mouth that he had married more wives than one.

I knew in regard to the revelation concerning the doctrine of plural marriage, cannot tell you exactly when I first saw it; it was along in the middle of July somewhere, in 1842. Yes, I guess it was in 1842.

178 Bishop Whitney got the revelation, and presented it to me, and wanted me to copy it, and so I went into a room by myself, and copied it; that is, I copied the revelation on plural marriage that he handed me, and just as I got through copying it, Hyrum Smith came in and wanted it,—the original revelation was what he wanted.

He came in to see how I got along with it; that is, Bishop Whitney did, and then he went out and told Hyrum Smith that he would hand him the revelation in a few minutes, for I was not quite through making the copy. When I had got through making the copy, I took the one I had made myself and read it, and he took the other and read it at the same time to see if I had made any mistakes, and that it was correct, and when he found that it was all correct, he took the one that I had made, and went out and handed it to Hyrum Smith, who was outside the door ready to take it. I copied it just a day or two after it was given. The revelation I copied is just the same as the

one published in the Book of Doctrine and Covenants by the Salt Lake Church in Defendant's Exhibit A.

CROSS-EXAMINATION.

180 I became a member of the church in January, 1832, at Kirtland. A man by the name of Riggs baptized me. I knew Bishop Whitney and Bishop Partridge. This man Partridge whom I knew was named Edward Partridge. He was a bishop of the church at that time, and Bishop Whitney was another bishop in the church before I became a member. The first office I held in the church was an elder. I was ordained elder, July 18, 1833. I was a member of the church before any of the church went to Jackson county, Missouri. Well, now, possibly Bishop Partridge was there before I joined the church, I would not be positive, but I think he was there.

I do not know anything about Bishop Partridge's purchasing land in Missouri, only from hearsay, and that is all I know about it. I know this, that Bishop Whitney said to me that he had sent money out there to buy land for the church, told me that after I went with the church. After I had joined it, I went with him and lived with him a while, and that is what he told me about it. He sent it up to buy land, sent it to Bishop Partridge.

I afterwards went to Missouri, but not to Jackson county. I
181 went to Missouri in 1838, to Far West. Did not live there more than three months, because I had to move. I do not know whether I was at Far West when the revelation on tithing and surplus property was given or not. I was not there at the conference held in April, 1838; did not get there until October. I left there in January, 1839. I went from Far West to Nauvoo, not directly, I stopped on the road about twenty-five miles from Quincy; stayed there probably eight or nine months, and then went on to Nauvoo. I finally got to Nauvoo in the fall or winter of 1839; no it was in 1840 that I went to Nauvoo. I am totally positive of that.

It was in the fall or winter and was pretty cold when we got there.
183 After I went to Nauvoo I was employed in going up and down the river to help to lighten boats. I continued in that for a year or two. I was there at that for a year certainly, and I guess off and on it was a couple of years that I helped to lighten boats. I think about a couple of years. At that time I was working for the steamboat folks and as they came in, I would work for them helping lighten them, and I used to go over to Montrose and help lighten boats there also. I took any job that came up that I could get, and was employed in that way for a year or two,—possibly only a year and a half. I cannot remember the names of the captains of the boats or the men I worked for. I was just a day laborer. I used to attend church there at Nauvoo most of the time; I was pretty regular in my attendance at church. I did not do much preaching then. I exercised the duties of a high priest when it was required. I was a member of

the High Council at Kirtland in 1838 when I lived there. I think that was the time. I think there is no doubt about that. There is no doubt about my being a member of the High Council at
184 Kirtland. I was not a member of the High Council at Nauvoo because there was some one appointed instead of me. I was a high priest, and was a member of the High Council at Kirtland by virtue of being high priest, but I was not a member of the High Council at Nauvoo; they had appointed others in my place. I did not perform any of the duties of high priest particularly at Nauvoo. I was not set apart for any particular place. I was out once in awhile, and visited a settlement outside, but that was not done very often, because I was a common laboring man. I did not perform any marriage ceremonies in Nauvoo, nor any about there, nor any at
185 Kirtland. Part of the time I was there in Nauvoo, I was in Joseph Smith's store. During the time from 1832 to '44, I traveled east two or three times on a mission in the Eastern States. Was gone a year or two on that mission. I went from Kirtland once, and after I came to Nauvoo, I went from there and was gone a while. The time I went from Kirtland was in '33 or '34, and the time I went from Nauvoo I think was in '44. Yes, sir, it was in '44; I went in the spring, somewhere along about March or April. I was gone about a year. I went to the Eastern States on that mission.

I did not teach the doctrine of polygamy while I was in the Eastern States on that mission, no, sir, I did not. I taught only the first principles of the gospel; did not talk polygamy at all. Was not instructed to teach anything but the first principles of the gospel.

I do not know as I taught anything in particular on the marriage question. I taught what was the law of the church if I taught anything. I do not know what I did teach on the question, but I didn't teach anybody that they could have more wives than one.

Q.—Was there any law in the church at that time that provided that a man could have more wives than one?

A.—Well, now,—

Q.—Well, now, just answer the question; was there any law in the church at that time that provided that a man could have more wives than one?

A.—No more than that revelation. That polygamy revelation as it is called; that was a doctrine of the church at that time. The Book of Doctrine and Covenants had been presented to the church at that time and that was in it. The revelation was in it.

Q.—Was it in it in 1844?

A.—I never saw it then.

Q.—Was it in it in 1852?

A.—I cannot tell you,—I don't remember.

Q.—Was it in the 1845 edition of the Book of Covenants?

186 *A.*—I guess it was in the 1852 edition. I think it was in that edition, but I do not know anything about it.

I am not positive, I have my own ideas of course, but I have no

knowledge. I was an elder in the church at that time, and it was a doctrine in the church at that time. It was a doctrine as it was presented in the Book of Doctrine and Covenants.

When it was presented or embodied in the Book of Doctrine and Covenants and was presented to the church it became a law. I suppose it did and not until then.

Q.—Well, did it become a law of the church until it was presented to the church and accepted by the church? Now answer that question, yes or no.

A.—Well, I do not know about that. I know it was a doctrine of the church, when it was published and made public. I know it was
187 not published in the church until about 1852.

Q.—Are you willing to go on record as swearing that within two or three days after it was revealed to him you copied the revelation?

A.—I cannot tell you exactly the number of days. I presume it was within ten days after it was revealed to him that I copied it, but it might have been more than that. I am willing to swear that within twenty days after that I copied it, and that it was revealed to him within twenty days prior to the time I copied it.

Yes, sir, I swear to that, right straight up and down. He told me it was revealed to him, that was the way I knew it, but of course I do not know anything more about that than what he told me. He did not tell me he got it just two or three days before I copied it. It is hard for me to testify and say I know a thing when I do not.

You ask me to testify and say a certain thing occurred between or within so many days, and I can't tell you just how many days or just when it was, but I do know that the revelation was a doctrine of the church.

Yes, I said I would swear that it was within twenty days of when
189 it was received by Joseph Smith that I copied it. All I know about its being within twenty days is what he told me. He did not tell me when he had received it, the day nor the hour that he had received it, nor the month; did not tell me anything about when he received it, and I do not know when he got it, but I suppose that was when he got it. I do not know when he received it except from circumstances. One of the circumstances is that Bishop Whitney got it soon after it was received, but I do not know that, except as I said, by circumstances.

Q.—Well, now, what are the circumstances?

A.—The circumstances are that as soon as the revelation was received, that Bishop Whitney went and got the revelation from Joseph Smith, according to his testimony to me, and he handed it to me to make a copy of it.

I do not know anything about where Bishop Whitney got it, except what he told me. All I know about where he got it is what Bishop Whitney told me.

I did not hold the office of secretary or private secretary or any

office of that kind with reference to the Bishop. The Bishop did not have any office at that time.

I did not have any particular business in Joseph Smith's office at
192 that time. Joseph Smith kept a private office, and kept a private secretary. I was not his private secretary. A man by the name of Clayton was his private secretary.

I cannot swear that Clayton was his private secretary, but I know he went with him and everybody supposed he was his private secretary, and he did Joseph's private writing. I do not know it of my own knowledge.

I knew a man by the name of Whitehead there in Nauvoo well. He was in the tithing office under Clayton. Clayton was in the tithing office,—was the chief clerk. Whitehead was there under him; that is, Whitehead was there under Clayton, and Clayton was there under Bishop Whitney's direction, and I had the handling of the goods under Bishop Whitney's direction, so I came to know them very well. I mean goods that were brought in under tithing.

I think it was in the year '41 or '42 that I was in Joseph Smith's store, somewhere along there.

I was not there when Joseph Smith died. I started away about a year before that, something like that. That was when I started on my mission. I came back soon after his death. I think I came back in July, '44, and had been gone about a year, so that I started about
193 July, '43. Well, I will tell you, I think I started in August, 1843, and got back in July, 1844. I think I recollect these dates now, and the rest of the year 1844 I was with Bishop Whitney.

Yes, sir, I said I copied that revelation, and I copied the whole of it according to my best recollection. I cannot tell you exactly how long it took me, but I know I copied it just as fast as I could take it down, and I could write pretty well then.

Q.—How many sheets of paper did you have?

A.—I could not say. There was as much as two large sheets of paper, common paper used in those days. The usual size of paper. I do not know what kind it was, but I suppose it was common foolscap. There were two sheets of it. There must have been. I know there was more than one. I wrote on what paper it took, but I cannot tell how much it took. I cannot remember these things, and I do not believe anybody else could. I suppose I was not more than an hour. Perhaps it took an hour and perhaps not over half an hour. I have not seen a copy since I saw it in Nauvoo, soon after I wrote it.

198 *Q.*—Don't you know that you did not write quite a page of foolscap paper at that time, is that not true?

A.—I know I wrote just what it took, whatever that was. There was more than that, but I do not know just how much there was; I cannot just say. I do not know whether I wrote it in an hour or not, possibly I might. My best judgment is that it was an hour, more or less. I do not know whom the revelation was given to of my own personal knowledge. I do not know what day of the week

it was when I copied it. Cannot say whether it was Sunday or not. It was somewhere along during the middle of the day, but I cannot say whether it was in the forenoon or afternoon. I never saw the copy after that day.

200 I was in the General Conference of the church held in the Tabernacle here in 1852, in Salt Lake. The revelation on polygamy was published to the world I think in 1852. I do not remember whether it was presented here at that conference or not.

We consider it now one of the articles and laws of the church here in Utah that a man should have but one wife, but before this Manifesto, the time the United States got after us, we considered we had the privilege of having more wives than one if we wanted them.

203 The revelation was not exactly changing the laws found in the 1835 edition of the Book of Doctrine and Covenants, but was adding to it, you may say. The addition would make a change in the law. You can see yourself that it did. This revelation gave the male members of the church the privilege of having more wives than one. It did not give the female members of the church the privilege of 207 having more husbands than one.

I was not married in 1832 when I became a member of the church. I was married in 1836, at Kirtland, Ohio. My wife's name was Caroline Whitney, daughter of Bishop Whitney.

The ceremony that was repeated by the officiating clergyman was substantially the ceremony contained in the Book of Doctrine and Covenants, Exhibit E, on marriage, but was not exactly that way. 208 He married my wife to me and after that he married me to her. He took one person at a time, and married us in that way.

The ceremony in the Book of Doctrine and Covenants says mutually agree. He repeated about the same ceremony to the woman that he did to me, but I cannot say exactly what it was. There was nothing said about whether I had the privilege of taking another woman or not. I never heard anything of that kind in those days either under the laws of the land or under the laws of the church.

No one had the privilege under the laws of the church up to 1844, nor under the laws of the United States or in any State up to 1844, to take more wives than one. We did not consider that we had such a privilege at all. I have been married three times since 1844. My wives were not all living at the same time, but two of them were living at the same time.

209 I do not remember hearing any minister in the Church of Jesus Christ of Latter Day Saints, prior to 1844 in Nauvoo or any other place, preach or teach the doctrine of polygamy, nor in any other place or time prior to 1844; never heard it preached from the stand prior to 1844 at all. I never heard it preached from the pulpit before 1844.

I heard it in private conversations as I stated; Bishop Whitney told me of it before. I did not hear it taught privately to any number of persons prior to 1844. Bishop Whitney told

me we had the privilege of having more than one wife. That was the understanding. I cannot tell you all that he said, but that is the substance. Do not remember anything else he said.

I do not swear to that; I affirm to it. To my mind there is a difference between swearing to anything and affirming to it. I con-
210 sider that there is a difference between an oath and an affirmation. There is a little difference.

An oath is more binding than an affirmation. It is considered to be more serious, that is the way I understand it,—that an oath is more binding or more serious than an affirmation. I generally affirm, and I suppose it is because my understanding is that a man cannot be convicted of perjury on an affirmation, and he can when he is sworn,—I suppose that is true.

I consider there is more solemnity about an oath than about an affirmation; it is more binding, and I affirm because I would rather affirm than take the oath.

I have told here substantially all that Joseph Smith ever said about the practice of polygamy. He said that a man had the privilege if he was considered worthy of having more wives than one. He said we could have women sealed to us for time and eternity. I cannot exactly say that he used the word *wives* but I presume it is likely he did. I am not willing to swear or affirm that he did, but I say I presume he did.

Q.—Well, are you willing to swear that he used that language, "A man could have wives sealed to him?"

A.—I am affirming.

Q.—You do not forget that you are affirming?

A.—No, sir, and the understanding I got from what he said was that a man could have more wives than one, and he could have them
211 sealed to him, but I cannot say that is the language he used. That is my understanding. I did not marry any more wives than one then, and I do not know that it is any of your business why I did not, or as it is any concern of yours when I did marry another, and I decline to answer when I did marry another unless I am compelled to do so, and it is my personal business whether my answer would tend to criminate me or not, and it is none of yours. I decline to answer the question when I married the second time, because it is none of your business.

My first wife died in October, and I think it was about a year or so after that when I married the second wife, and I think it was perhaps six months after that that I married the third one. The second one was then living. Do not remember exactly the time, but I think it was about six months. I had two wives living at the same time while I was in Nauvoo, Illinois. Heber C. Kimball married them to me, in the Temple at Nauvoo. It was just a short time before I came away, and I think it was in 1846, '45 or 46, somewhere along there.
212 I was married to them for time and eternity. The same ceremony was not used at the time I was married to these two women in 1845 or

'46 that was used by Joseph Smith at the time I was married at Kirtland in 1836. There was a change in the marriage ceremony in 1846,—we were married for eternity as well as time. The marriage ceremony was changed, and we were married for eternity the last time; that was added on to the ceremony, the ceremony was extended by the addition of that,—broadened out,—spread out,—more added to it, and that is my understanding of the doctrine of polygamy, that it is just an extension of the original doctrine of the church, extending it and spreading it out, making the additions that men can have two wives instead of one, that is, the old law of the church before this was injected into it—this broadening process—allowed the men to have but one wife, and after this came they were allowed to have from one wife up to as many as Solomon had. The ceremony that was repeated to me at the Temple at Nauvoo at the time I married these two women in 1846 was not the ceremony which you read to me out of the Book of Doctrine and Covenants, 1835 edition. It was a different ceremony altogether. I have not a book that contained the ceremony that was used in 1846. There was none printed that I know of.

I presume I took the oath at the time I was married in the Temple at Nauvoo. I went through the endowment there at Nauvoo at the time I was married the second time. It was in the same year, just before I was married to my second wife.

At the time I went through the endowments, I took the oath, yes, sir. In that, I think I promised to be obedient to the officers of the church and to the regulations of the church, to the counsels and commands of its officers. I do not find in the Book of Doctrine and Covenants, Exhibit E, the marriage ceremony by which I was married in the Temple at Nauvoo. Do not remember seeing it in it, and I guess it is not in there.

I was baptized first in 1832, and I was baptized the next time when I came out here to Utah. I was baptized first for the remission of sins. Was baptized the second time for the same thing. I came out here in 1847 and was rebaptized then. When I came out here I was baptized again renewing my covenants and also for the remission of sins that I might have committed in taking this long and tedious journey through all these mountains and canons. We thought it might do us good to be baptized again.

I had not broken the covenants I made when I was first baptized, had not broken the church laws, none of them, and it was my privilege, feeling that I should, and still it was not a matter of necessity, that I be baptized. Still I thought it would do no harm to be baptized again. That was a public teaching from the stand out here, that everyone who came out here should be baptized again. Yes, sir, the Bible teaches that at the time of baptism that you are baptized into Christ, that is what I understand it to teach, and I do not know that it is necessary to answer the question whether I got out of Christ, coming across the plains, or not. There was nothing said

at the time we were baptized the second time about baptizing us into the spirit of Brighamism.

216 All the members of the church that came into Utah were instructed to be baptized under Brigham Young, and were all baptized under his counsel.

They had all been baptized under the presidency of Joseph Smith before that time, and now they had to be baptized under the presidency of Brigham Young. It was an order to baptize all the church.

After this, the church had another reformation, and under that we were baptized the second time and were baptized for the same thing. You can call it what you please; but suppose it was for the remission of sins. I do not know whether we had got out of Christ then or not.

The Bible teaches that the members were baptized into Christ; that was the original church doctrine, but our mode of baptism is regarded that we were baptized for the remission of sins. I do not say baptized into Christ, still of course, we believe that Christ is our leader and head.

Yes, sir, I was baptized at Kirtland into Christ; that is what the
219 Bible teaches. I do not know whether the Book of Mormon says anything about that or not, but I know the New Testament and the Book of Doctrine and Covenants says baptized into Christ. I do not remember that I was baptized into Christ any more than three times.

I do not remember whether the members of the church had to be baptized under the presidency of John Taylor or not,—not that I remember of. Yes, sir, it is necessary when you join the church to be baptized. It is so in our church, and if I had joined the Campbellite Church, I expect I should have been baptized into that. My first and second baptisms were legal and binding, and the third one, too.

Yes, sir, it requires three baptisms into the kingdom of heaven or in this church out here. They teach rebaptism here in Utah as a doctrine. The authorities in the church here in Utah have taught it and insisted that everyone who came here should be baptized, and have baptized them the third time since coming here. It did not make any difference whether or not they belonged to the church when they came here, they were rebaptized when they came here.

I cannot tell you why it was necessary that members of the church who were baptized in Illinois or in any other State in the Union or in Europe or anywhere else by Brigham Young had to be baptized after they came to Utah; you would have to ask them.

220 But after they came here, it was required to be practiced because it was the advice and decision of the Council and the Presidency, it was decided that it was best to use the ordinance of baptism. Now that is the way it was. Yes, sir, King James' translation of the Bible, the Book of Mormon, and the Book of Doctrine and Covenants were the three standard books of doctrine of the church prior to the death of Joseph Smith, and these three books were the law of the

church prior to that time. We were governed by these three books, and these were the only ones, and they contained the law of the church up to 1844, the time he was killed. The Apostle Paul in his letter to the Hebrews teaches the people not to return to do their first works over again. The apostle says: "Not leaving the principles of the doctrine of Christ, let us go on unto perfection."

221 *Q.*—How did you come to get that "not" in there?

A.—That was in the revelation from Joseph Smith in his lifetime, the time he translated the Bible.

I believe in that translation, and the church here does to some extent, but the church here has not accepted that translation.

I do not understand that that is accepted by the church here, but I understand it is by young Joseph Smith and his church. It is published as his translation of the Bible, and it does not come from this church here, in Salt Lake. Yes, sir, the original Joseph Smith translated the Bible, but he did not publish it,—did not print it.

I do not know that the revelation on polygamy teaches that a man cannot be married to his second wife without the consent of the first one, and if the first wife refuses to give her consent and persists in 225 her refusal, that she must be killed. If it is in the polygamous revelation that she must be killed, I never heard of it. No, it don't say she is to be killed; I am positive of that.

I cannot say how long it took me to copy the revelation on polygamy. I told you before I could not tell you how long it took, whether it was an hour, or half an hour, or how long. I said it was not over an hour, and maybe it wasn't that long. I cannot say how long it took me. It took me an hour, I should say, maybe not so long. Exhibit A, section 132; yes, sir, that is the revelation I said I copied. It makes eleven pages of this book, Exhibit A, and I am going on record here as testifying that I said I copied it in the neighborhood of an hour.

I was a pretty good writer in those days, and I could write pretty fast when I tried, and I do not think it was more than an hour that I was copying it, but I do not know. The paper I copied, I presume was copied in an hour, but I could not tell you exactly, of course. Yes, I said I copied the revelation on one sheet of paper,—foolscap.

226 *Q.*—Now, don't you know that you could not copy that revelation, section 132 of Exhibit A on one sheet of paper, and that you could not copy it on twenty sheets of paper, foolscap or any other kind of ordinary writing paper?

A.—No, sir, I do not know anything about it.

Q.—Don't you know that you could not copy it in three hours?

A.—No, sir, I think I could copy it in nearly an hour; do not think it would take me much over an hour to copy it, and I do not think I was much over an hour in copying it either.

I never saw the copy after I made it. I remember it was the revelation printed in here because I read the one I copied, and I remember enough of the one I copied to know it. I never saw it from the

time I copied it until I came out here, and then it was printed. I cannot say how long after I came out here. Exhibit A was printed in 1876. I think it was printed before that, but in 1876 was the first time it was printed in the Book of Doctrine and Covenants, I think.

I cannot tell you how many paragraphs there are in the one I copied, nor I cannot tell you how many paragraphs are in the one in Exhibit A. I do not believe I knew anything about the number of paragraphs; did not notice to see. That was a long time ago, and I cannot remember, even if I knew then. I do not know whether there were twenty, and I do not know that there were any that were marked off in paragraphs. The one I copied was not in verse.

228 I do not know that I can remember a single, solitary sentence of the one I copied without the aid of this book, Exhibit A, I do not know that I can. I cannot repeat a sentence of the one I copied without the book, nor one single idea.

I do not remember whether the one I copied used the word *sealing* or *polygamy*. I do not remember what the title of it was, or that it had any title. I was not an extra writer nor a first-class writer, but I was pretty good. That revelation teaches that if the first wife refuses her consent to the marriage of her husband to the second wife and persists in her refusal, that she will die in the flesh. That was not the law of the church prior to the death of Joseph Smith that I know of.

---

237 MERCY RACHEL THOMPSON, of lawful age, being sworn on the part of the Defendants, testified as follows:—

I reside at 103 North Second street, in the city of Salt Lake. Before coming here I lived in Illinois, at Nauvoo. We went there in 1838, and left there in '46, when all the rest did. I think it was about April or May, 1838, when we first went there. It was in the spring, anyway.

By Joseph F. Smith: "Allow me to say to refresh your memory that we were driven from Missouri in 1838."

Witness: We left Missouri in 1838; that is, we were driven from there then and we left, I believe, in February, 1839. We went to a place called Commerce, afterwards called Nauvoo, in Illinois, so that
238 I went to Nauvoo in 1839. I was a member of the Mormon Church at the time I went to Nauvoo. It was called the Church of Jesus Christ of Latter Day Saints.

While we were living at Nauvoo the principles of polygamy were taught and practiced of course; that is, it was generally understood that it was. It was taught publicly by Joseph Smith. He gave endowments just the same as we now give in the church here.

239 By Plaintiff's counsel: "I wish the record to show that Mr. Joseph F. Smith is sitting in the room and constantly prompting the witness; I wish the record to show that fact, and I will state that while we have no disposition to shut Mr. Smith out from where this testimony is being taken, yet, if he does not cease his prompting, we must de-

cline to proceed with the examination of this witness at this place, and continue it at a place where it will be more proper for us to insist upon our legal right to have the testimony of the witness taken without any prompting. We came here to accommodate Mr. Hall and the witness, and we desire that we be accorded fair play. I will say further that if Mr. Smith is to take any part in this examination, either as counsel or a party to this suit, we have no objection, only that the record shall show that fact."

I do not know but what I could say from my own knowledge that polygamy was practiced in Nauvoo, for the real truth is, I practiced it myself. I have no better proof than that, I guess.

CROSS-EXAMINATION.

241 I have been at Kirtland, Ohio, a few times,—never had any residence there. I became a member of the church in 1836, in Upper Canada. I lived in Missouri, at Far West, at the time of the persecution there. Never lived in Jackson county. I was in Caldwell county. I landed at Far West on the third day of June, 1838. I presume there was a conference held there after I came there, but I do not recollect particularly about it.

I had been married at that time. My husband's name was Robert Blashel Thompson. I was married to him on the 4th day of June, 1837, at Kirtland. Joseph Smith performed the ceremony.

I remember the ceremony that was used, yes, sir. It was the ceremony prescribed by the church and set forth in the Book of Doctrine and Covenants. I never paid very much attention, for the reason that I knew it was the right ceremony, or he would not have per-
242 formed it. I was married in a private house. I forget the man's name, but the ceremony that was used on that occasion was nothing less than the one prescribed in the Book of Doctrine and Covenants.

I had one child by that marriage,—this one here (referring to her daughter who is in the room). She was born the 14th of June, 1838. Her name is Mary Jane Thompson. I left Far West, Missouri, in February, 1839; went direct to Commerce, Illinois; that is, went to Commerce after the prophet was liberated from prison; stopped at Quincy a little while. My husband was living at that time. He died on the 27th of August, 1841. I lived in Nauvoo in 1841.

243 I lived with my sister after her husband was martyred. My sister's name before she was married was Mary Fielding. She was married in December, 1837. Her husband's name was Hyrum Smith. His first wife had died and he married her. I cannot tell you the date his first wife died. She died before he married my sister. I lived with my sister and Hyrum Smith from about two years after the time my husband died until Hyrum Smith was killed. I lived in my own house by myself for a year after my husband died, then went there. Yes, after my husband died I lived in my own house for about a year, a little over a year. My husband died in August, and it was about two years after before I went to live in the house with

244 Hyrum Smith and my sister. My brother and his family lived with me about four months of the time and my child with me all the time. I was acquainted with the laws of the church up to that time, and up to the time of the death of Joseph and Hyrum Smith, and attended conferences.

Q.—Now, in your examination by Mr. Hall, you stated that you heard Joseph Smith publicly teach the doctrine of polygamy and advocate its practice; now where did you ever hear him preach or teach that doctrine publicly?

A.—Now, let me see. Did I say publicly? For I did not mean that it was on the stand or in the pulpit, I meant that it was not taught to me alone, but along with others. I was not at many of the public meetings, and cannot say what was taught or preached at the meetings. I never heard him preach it or teach it from the pulpit at all at any time or any place.

Q.—You never heard Joseph Smith teach the practice of polygamy as it is taught in the purported revelation on polygamy that is now to be found in the Book of Doctrine and Covenants published under the authority of the Utah Church? I am asking you about any time or place, either before or after you were married or at any other time whatever?

A.—No, I never did. I heard it taught in 1842; well, I would not say whether it was in 1842 or '43. He talked it to me at my own house. He came and talked to me about it. At that time I do not recollect that there was anybody in particular present, rather think we were alone. Yes, sir, it was a private conversation between him and me. He was in the habit of going in and out of the house as he pleased, and that was the way he came to my house and talked to me about it. The only times he talked to me on the subject of polygamy was in my own house in private conversations, and in a conversation at which my sister was present at one time.

Q.—Are you willing to swear now before the Lord that you ever
246 heard him teach it in a more public; that is, in a congregation more public, than a congregation composed of himself, yourself, and your sister?

A.—No, sir, I am not. I said I was married to Hyrum Smith, and the same identical ceremony was used at the time I married Hyrum Smith that was used at the time I married Mr. Thompson. Of course this was a proxy marriage. I mean by this that it was a case where
247 there was a proxy in it, in the marriage ceremony.

Q.—I thought you said it was the same that was used on the occasion of your marriage to Mr. Thompson?

A.—Well, it was, with a little difference.

Q.—Do you mean to say that you were married to Hyrum Smith by proxy?

A.—He made an agreement that he would deliver me up on the morning of the day of the resurrection to my husband, Robert Blashel Thompson, but would take charge of me for life with the

agreement to deliver me up to my husband on the morning of the resurrection. That is what I meant by a marriage by proxy. That is what is called and taught here in the Church in Utah as sealing. We call it sealing when we are married in that way, because we are only married for time and not for eternity. I was only married to Hyrum Smith for time,—sealed to him,—and he would deliver me up in the day of the resurrection to my husband, Mr. Thompson. He was to deliver the children up, too, if we had any, but we did not have any. This was in August, 1843, that I was sealed to him, and it was almost a year after that time before he was martyred,—that was in June, 1844. No, sir, I told you there were no children from that sealing or marriage. The ceremony on the part of Hyrum Smith was that he would take charge of me during my life here on earth, and deliver me, together with whatever children that might be raised as the fruits of the union between him and myself to my husband, Thompson, in eternity.

Q.—By what law of the church was that marriage made and entered into?

A.—By a law that was given to the prophet from the Lord. You know of course that he was a prophet of the Lord, and a lawgiver, and whatever the Lord gave to him or to the church through its prophet was a law of the church.

Q.—Well, don't appeal to me, for I don't know anything about it. I do not pretend to know anything about it, only incidentally for the purposes of this case and I do not believe it either.

248 *A.*—Well, I am speaking of the fact that he was a lawgiver. I am speaking of the fact that Joseph the prophet was a lawgiver, and whatever he said was a law unto us. Whatever he told us came from the Lord we accepted, and when he said the word of the Lord was thus and so, we knew it was so, and believed it without witnessing it ourselves, for we knew he would not tell us anything came from the Lord that did not come from the Lord. There are some things that I know that I hardly think is necessary for me to explain, for you would hardly understand about them if I did explain them to you.

By Joseph F. Smith: "Answer the questions the best you can. He is only asking you upon certain points, and he expects that you will answer them if you can. He expects you to answer the questions he asks you if you can, and you need not tell anything only what you know, and in reply to the questions he asks you. Now she does not understand her duty here on the witness stand, and that is the reason I make this explanation to her."

It was a law of the church the time I married Hyrum Smith that a man could have more wives than one. It had been accepted by the church in 1843. It was a law. Of course I did know that it was accepted by the church. Of course it was presented to the church for acceptance or rejection. Yes, sir, of course it was. I cannot tell
249 where it was presented, for I was not always present when these

matters were attended to. I do not recollect any time in particular that I know it was presented and accepted.

Q.—Was it ever presented to the church publicly as a law of the church for acceptance?

A.—Well, that is a question that I would have to consider somewhat before I would undertake to answer. I would have to consider that some time before I could answer it.

I saw that revelation on polygamy, and had it in my hands, saw what kind of paper it was written on. It was written on foolscap
251 paper. I do not know exactly how many pages there were of it, think there was not more than one whole sheet, and I am as certain of that as I am of anything I have testified to, that there was not more than one whole sheet of foolscap, that would be four pages. If there had been more than one full sheet, I should have known it. It did not require any pins in the paper to pin it together, because when it was opened up it was all on one sheet.

No, sir, I cannot mention anything that was in it. I would not try to do that. I do not recollect the first word nor the last word. I think the last word would be *amen*, likely, but I do not remember it. I do not know that the name of Joseph Smith was signed to it. After I delivered this paper up to Hyrum Smith on which this revelation was written, I do not recollect of ever seeing it again after
252 that. If I ever saw it again, I have no recollection of it.

I do not remember that I was asked to identify the paper that was presented here by Brigham Young in this Territory that purported to be that revelation.

By Joseph F. Smith: "These gentlemen (meaning the Plaintiffs) want to impress upon your mind the fact that you should simply answer the questions they ask you and nothing more. They do not want any voluntary evidence going in here. Just answer the questions asked and nothing more."

I have never seen the paper on which this purported revelation was written since I was at Nauvoo in about 1843. I have never had it in my hands to see it or read it since the time I handed it back to Hyrum Smith.

253 The paper that I had in Illinois and that I read and which I handed to Hyrum Smith was on the question of sealing, and that was the only subject to which it referred,—sealing for eternity. I am satisfied on that point, that it was on the question of sealing for eternity. It was on the question of sealing a man's wife for eternity; yes, sir, that was it, and I am willing to swear to that before the Lord.

I cannot say that it said anything about sealing a man's wife to him for time. I do not recollect well enough to say that was in it, but I remember that it was on sealing. I do not recollect so as to say it said anything about sealing a man's wife to him for time. I have not recollection enough on that point so as to give testimony to what it did say. I know that it was on the question of sealing and plural marriage.

254 The first time I ever saw this pretended revelation after I left Nauvoo was when it was printed in the Book of Doctrine and Covenants. I saw one of the books, a printed copy. Saw it printed in the Book of Doctrine and Covenants, and that was the first time it was printed to my knowledge, and as far as I can recollect it was the first time I saw it in any form after I gave the paper back to Hyrum Smith.

It was preached here, and practiced, of course, before that; but it was in the Book of Doctrine and Covenants where I first saw it printed. I had a Book of Doctrine and Covenants when I lived in Nauvoo. I do not know whether I have one now that was printed in 1835 or not.

255 *Q.*—Now, who was present when you married Hyrum Smith?

A.—Well, now, is it necessary for me to answer that question? I have answered that question, and told you that I could not recollect who was present. I said I could not remember. I know that my sister was there. Me and my sister and Hyrum Smith.

Q.—Have you your marriage certificate?

A.—I don't know whether I could find it or not. In fact, I do not know whether I ever had one of my marriage with Hyrum Smith. That was something he was to see to, and I do not know that I have ever seen one; do not know anything about that.

256 I am not willing to say that I ever had one, for I do not know anything about it. I never had any anxiety on that subject. I do not know that the laws of the church required any certificate of marriage; no, sir, I do not know that.

The clerk was not there to make a record of the marriage at the time. Emma Smith, the wife of Joseph Smith, was not present when we were married. Hyrum Smith's other wife was present. Yes, sir, she was. I do not think the clerk was there at the time that we were married; if he was, I haven't any recollection of it. Sloan was the clerk of the church at that time. I do not remember his first name; that is, I mean Sloan was Hyrum Smith's clerk, and he was not present there. Hyrum Smith's first wife was present, yes, sir.

Q.—Did you say that Hyrum Smith's first wife died, and that he afterwards married your sister?

A.—Yes, sir.

Q.—She attended your wedding if she was dead?

A.—Well, I did not mean the one that was dead. I meant my sister that was married to Hyrum Smith.

This Book of Doctrine and Covenants is one that I had while I was living at Nauvoo. I have had it over fifty years.

257 *Q.*—I was going to say, Mrs. Thompson, that this book was published in 1849.

A.—Yes, sir, I see it is. I thought it was the other one. I had

another one before I got this one. I believe this is published in Liverpool, England.

Q.—You got this one after you came to Salt Lake, did you not?

A.—Yes, sir, I think I got that one after I came to Salt Lake, because I left Nauvoo in '46 or '47 and this was not published until 1849. This is the oldest Book of Doctrine and Covenants that I know of now.

Q.—Was that Book of Doctrine and Covenants published in 1849 recognized by the church as containing the law of the church up to date of its publication in 1849?

A.—Yes, sir.

Q.—It is recognized by the church as containing the law of the church up to that time?

A.—Yes, sir, so far as I know it is. I do not think it contained the revelation on polygamy. I am pretty sure it did not, for it was after that that it was published.

"It is admitted by Defendants that the Book of Doctrine and Covenants, 1849 edition, does not contain the revelation on polygamy."

I have heard Brigham Young preach the doctrine of polygamy a great many times from the stand, both here and in Nauvoo before
258 1849, and Heber C. Kimball and Orson Hyde and Orson Pratt, but I do not know that I ever at any time or place heard any of them from the public platform or pulpit preach the doctrine of polygamy before 1846. I do not know from my memory, cannot say. Cannot think back that far. I do not recollect of their preaching it in any public congregations. I cannot remember hearing them preach polygamy from the stand or platform or pulpit at any time prior to 1849. I was here in Salt Lake in 1852, in August. I usually attended the meetings of the church here at that time.

Q.—I will ask you if you were at a meeting in the Tabernacle here in Salt Lake in 1852, in August or September, at which the revelation on polygamy was presented to the church for adoption to be voted on by the church? There were several parties spoke on the same day Brigham Young presented the revelation which was read by Orson Pratt?

A.—Yes, sir, it was Orson Pratt, and it was read to the audience by him and presented by Brigham Young. Yes, sir, that is right, I think. I was present at that meeting; for I remember something about Orson Pratt in that connection.

259 I believe the church voted that day to receive it. The revelation on polygamy is contained in the Book of Doctrine and Covenants published here in Utah in 1876, and I think it was the first publication of the Book of Doctrine and Covenants that contained that revelation, and I never saw that revelation in printed form until I saw it in the edition of 1876.

I do not know whether I saw it in the publication called the "Pearl of Great Price" or not. I may have seen it, but I do not remember it. The first definite recollection I have of seeing it in print at any

time was when it appeared in the 1876 edition of the Book of Doctrine and Covenants issued by the church here in Utah Territory, but I may have seen a publication of it by Orson Pratt, but I do not remember it now. I think I did see a publication of it by Orson Pratt, after I came here to Salt Lake.

I know the revelation on polygamy in the 1876 edition of the Book of Doctrine and Covenants is the same as the one I saw in Nauvoo, simply because they are alike,—Because I saw and read the one in
260 Nauvoo and had it in my hands. I can remember from 1843 as an independent act of my memory that they are alike and the way I know it is because I recollect what was on the paper in Nauvoo in 1843.

261 I do not know that it is necessary for me to tell whom I married after Hyrum Smith died, and I will not answer the question.

Well, after I had been a widow for a time after Hyrum was killed, then I married John Taylor. I married him two years before we left Nauvoo. That was in 1844 or '45 or somewhere along there. I guess it was in '45.

262 I was married to him in a private house there in Nauvoo. Was not married in the Temple, and I do not know that it is any of your business whether I was ever married in the Temple or not.

By Joseph F. Smith: "Answer the question, yes or no."

Witness: No, sir, I was never married in the Temple.

Brigham Young performed the ceremony when I married John Taylor. The same ceremony that was in the Book of Doctrine and Covenants was used when I married him. I was married to him by what is known as the proxy method. John Taylor made the same arrangements in reference to turning me over in eternity to my first husband together with all children that we might have as Hyrum Smith had before.

He agreed to take care of me as long as he lived, and then deliver me up to my first husband in eternity. I did not live with John Taylor until the time of his death. He was almost always away some place, or had his home some place else, and I had a home somewhere else, and I never lived with him regularly.

Yes, sir, I lived with him as his wife for a short time in Nauvoo, but never afterwards. John Taylor has only been dead a short time.

Q.—Were you married to anybody else during the time that you were married to John Taylor? Answer the question, yes or no.

A.—No, sir, I was not. It would not be likely that I would be married to two men at the same time.

By Joseph F. Smith: "Just answer the question yes or no, and that is enough."

A.—Well, I have answered it, and I do not think he should ask me such questions.

Q.—Were you not sealed to another man after you had married John Taylor?

A.—I will not answer the question. Yes, sir, I decline to answer

263 the question. I decline to answer it for the reason that I do not think I am under any obligation to answer such a question as that, and when I have said that I have said enough. I decline to answer any more questions on that subject. No, sir, I never was married in the endowment house in Salt Lake City, and I was never sealed to anybody in the endowment house here in Salt Lake City. I was never sealed to anybody in the Temple at Nauvoo; but I have been sealed to persons. I was sealed to my own husband and to Hyrum Smith and then to John Taylor. Hyrum Smith never had any wives except the one that died and my sister and myself.

I never went by the name of Mrs. Smith when I lived in Nauvoo
269 during the lifetime of Hyrum Smith. I went by the name of Thompson. I never was called Mrs. Smith.

She was always called Mrs. Smith, because she was his wife. I do not know exactly that I was his wife in the same sense that she was, for I was his wife for time. I meant that I was connected with him only by proxy, and that is why I made that expression.

No, sir, I never saw, while I lived in Nauvoo, any child, boy or girl, of Hyrum Smith's, or that was claimed to be his, except the children of his first wife. There were no others that I know of.

RE-EXAMINATION.

271 I was divorced from John Taylor in September, 1847, but I was married to another gentleman after that. I married a man by the name of Lawson. I was married to him in the same year, the latter end of that year 1847. After I had obtained a divorce, of course it was, I would not have married him without it.

RECROSS-EXAMINATION.

273 I have not talked with Mr. Hall nor with Mr. Cabell since you were here the other day taking my testimony. I talked with Joseph F. Smith about my testimony, but nothing more than I would with my own daughter there. We talked about what happened here the other day.

Q.—Now where were you living in 1847 when you were divorced from John Taylor?

A.—We had just come to the Valley here at that time. I was not divorced in any court at all. It was a church divorce, of course, and it was before Brigham Young. It was not at the time of the declaration made by Brigham Young by which he assumed to divorce all the women from their husbands. Yes sir, now that you speak of it, I did hear a declaration by Brigham Young about divorcing all the women from their husbands, but I have not thought of it since it occurred, hardly.

Q.—Did he not preach a sermon one Sunday here in the Tabernacle in which he said that on a certain day, he was going to divorce all the women in the Territory from their husbands?

A.—I do not recollect the circumstance.

274 *Q.*—Well, now was it not under the decree that you were divorced from John Taylor?

A.—It was before that ever happened. I have some recollection of the thing happening you mention, but I would not say it was just that way.

There was no particular charge preferred against John Taylor by which I received my divorce from him. It was a mutual understanding all around. Yes, sir, John Taylor and I agreed to separate, and in pursuance of that agreement, Brigham Young divorced us.

I think I have a copy of the decree of divorce. I have it somewhere, but I cannot put my hand on it right now. I am sure I could not tell where the copy of the decree of divorce is. I can tell it almost by heart, but I would not like to risk doing so. I do not like to say that I could find it without making an examination, and I do not know where it is. I will state its contents as I believe them to be.

The quorum of the Twelve apostles were together when it was done, and by the sanction of the law, and Mr. Taylor's assent and my request, it was granted and a written,—well, I do not know what you call it,—a bill, that was it, a regular bill of divorce granted, and one was sent to the then presiding officer in the Valley here before the body of the church came here; that is, I mean before Brigham got here, and they also wrote to me and informed me that I was free, and that if I wished to marry any good man holding the priesthood, I was at liberty to do so, and that it was sanctioned by the whole Quorum of the Twelve, Brigham Young presiding and Willard Richards acting as clerk.

President Young had been here, but at that time he had returned to Winter Quarters. No, sir, I was not divorced at Winter Quarters.

It was written at South Pass on the road to Winter Quarters, and
275 I got it here. That was where the Twelve had gotten together on the road out here, and the Twelve divorced me and recommended it to Brigham Young. Brigham was there with them, and all the rest of them were there. I was not there. Well, so far as I know, Brigham Young and all the rest were present, and in that bill it was stated that they all sanctioned it. They did not all sign the bill. Brigham Young testified that they all sanctioned it, and he signed it and the clerk signed it. No, sir, I was not present myself. We met them as we were coming out here, and they were returning from the pioneer journey, and they came back to the river, and we came through to the Valley here.

I was not present when the divorce was granted from John Taylor, but it was agreed before we separated that it should be done. Before I left there. We met there, you see, they were coming east and we were going west. After I left, Taylor had the matter attended to.

Brigham Young was not a judge of any court at that time, nor were any of the Twelve Apostles judges of any court of that Territory or any other Territory at that time. John Taylor was one of the Twelve himself.

The divorce was granted under the church law, and not under
276 the law of the country. Brigham Young signed that decree or bill of divorce as President of the church. Willard Richards signed it as clerk of the church.

After that I married again. I married James Lawson. John Taylor and James Lawson were living at the same time here in Salt Lake. John Taylor was President of the church here after I came to Salt Lake, was President after the death of Brigham Young. After Brigham Young died, John Taylor, the man I was divorced from, was made the President of the church, and James Lawson, the man I married, was living here at the same time that John Taylor was President of the church. He was an elder in the church.

I think that we were divorced in September, 1847, and I married Lawson sometime in the fall. There had been no agreement to marry Lawson before I was divorced. There was no courtship between myself and Lawson. I do not know that it is necessary for me to state all the arrangements between myself and Lawson, only it was just like this, that there was such a state of affairs
277 that made it almost a necessity that I should have some one to aid me in business matters and so on. You may call it that; it was necessity that drove me to marry Lawson, and it was a good deal on account of business principles that I married.

Q.—Why did you refuse the other day to answer about your marriage with Lawson?

A.—Well, because I thought it hadn't anything to do with this case at all, and that was the reason and I do not see yet that it has anything to do with it.

Q.—Well, what made you think it was necessary for us to come back down here to-day again and take your testimony, in which you have detailed this very thing willingly enough, too, which you declined to detail the other day when we were here?

A.—Well, I do not know, for I did not know you were coming, but when I saw that you were here, I supposed you had come for some purpose, and I wanted to give satisfaction if I could, for that is my general way of doing business.

Q.—Well, how did you come to send for us to come back here again to-day? Did you send word that you wanted us to come back here again to-day and take your evidence because you wanted to make an explanation?

A.—No, sir.

Q.—Did you not send that kind of word up?

A.—No, sir.

Q.—Did you not request anyone to see Mr. Hall and ask us to come back that you wanted to make an explanation of your testimony?

A.—I do not know what I have said to anybody on that subject.
278 I said I received endowments in Nauvoo, in the Masonic Hall, I rather think it was. Yes, sir, I think that was where it was. All the ceremony was performed in the Masonic Hall. The washing was done in the Masonic Hall, and the anointing with oil.

Q.—What furniture was in the Masonic Hall at the time the endowment ceremony was performed?

A.—Well, now, if you are expecting me to tell you all about the particulars of what was there in the way of funiture and what was done there, you must not expect me to do it any more than you would expect a Mason or an Odd Fellow or any other member of a secret society to reveal the secrets of their order; and I think to answer that question would be quite improper. The furniture was the same as we have here in the Temple at Salt Lake. I cannot say whether it was the same as the furniture in any Masonic Lodge or not. I never was in a Masonic Lodge to my knowledge, so I cannot say how they are furnished, that is, I never was in a Masonic Lodge when there was any business carried on at all.

Q.—Now, in taking these endowments, did you change your clothing?

A.—I do not know that I am bound to answer that question. Do not know that that has anything to do with this matter at all. Do not think that is a matter you really want to know anything about. Yes, sir, I did take an oath here to tell the truth, the whole truth, and nothing but the truth; but when I took that oath I was mistaken about it, for I know I ought not to tell anything I am under obligation not to tell anything about. I did not mean when I took that oath that I was to tell something that I had no right to tell, and which it was not my place to tell, and what you ask me is something I ought not to tell.

279 By Mr. Cabell: "Now, with reference to this oath that you have taken to tell the truth, the whole truth, and nothing but the truth, I want to inform you that that does not obligate you, or bind you to tell any secret in your endowments that you took an oath not to reveal, and that you are not obliged to do that."

Plaintiff's counsel objects to the instruction as to her duty or privilege, for the reason that the witness has not been interrogated regarding any part of the ceremony of endowments, or the ceremony pursued in conferring the endowments, and has not been interrogated regarding anything that she took an oath not to reveal.

Q.—Now, you did not take any obligation, did you, Mrs. Thompson, not to say at any time whether you changed your clothing or not in taking the endowments?

A.—No, sir, but at the same time, I do not feel that I would be able to answer that question. Yes, sir, we did change our clothing. There were always three rooms I think where we took our endowments. Two of these were ante rooms, and the other was where the main ceremonies were conducted. There was a place in one of the ante rooms where we were washed and anointed with oil.

Q.—Did they anoint the whole body with oil, or just the head?

A.—Well, now you are asking these questions, and I have answered them as far as I can, but that is a question I do not feel I am called on to answer, but I did not take an oath not to tell it at any time.

No, sir, I will not answer the question, because I do not feel disposed to myself and I do not think it is necessary. I do not think it is necessary, and that is the reason why I refuse to answer them. I have been through two or thee endowments since that time. Our endowments in Nauvoo were not for our deceased friends; that was not until we got out here.

Q.—Now, you do not pretend that the endowments you took in Nauvoo were the endowments that were spoken of in the revelation of 1841?

A.—I have seen no difference in them at any time. They are the endowments that are referred to in the Book of Doctrine and Cove-
280 nants in the revelation of 1841. The Book of Doctrine and Covenants says they must be performed in the temple. The endowments taken in Nauvoo were the same endowments taken in Salt Lake, exactly the same. I decline to answer the question whether in taking endowments we anointed the body with oil. I did not take any obligation not to reveal that, but I decline to answer it because I do not feel disposed to tell you. It is something you have no business to ask me, and I do not feel like telling you. I cannot see that is necessary that I should, and I therefore decline to answer it. If it is necessary for any purpose, I cannot see it. I do not wish to tell anything more than is really necessary, and I do not think that is necessary, and I decline to answer, and I say at the same time that I decline to answer the question, that I have not taken any obligation whatever not to tell. The reason I decline is because I do not feel disposed to do so. Yes, sir, I want you to believe my statements that the endowments in Nauvoo and in Salt Lake City were the same, but I decline to tell you how they were given in Nauvoo, and I decline to tell you how they were given in Salt Lake. Joseph Smith made the church law. Yes, sir, the Lord accepted our endowments
283 in the face of the revelation which reads as follows:—

> And again, verily I say unto you, how shall your washings be acceptable unto me except you perform them in a house which you have built to my name?

That revelation was the law of the church at that time, and Joseph Smith could not make a law that was in conflict with it. Paragraph 38 of the same section reads as follows:—

284 > For this cause I commanded Moses that he should build a tabernacle, that they should bear with them in the wilderness, and to build a house in the land of promise, that those ordinances might be revealed which had been hid from before the world was.

Yes, sir, that is right, and that was the law of the church at that time. The ordinances could not be revealed to any individuals outside of a house that had been dedicated for that purpose, but a house was being built just as fast as we were able to do it, but at that time there was no house built to the Lord unless you would call a schoolhouse one. Paragraph 40 of that same revelation is a follows:—

> Verily I say unto you, let this house be built unto my name, that I may reveal my ordinances therein, unto my people.

I recognize that as a law of the church at that time, and that is

285 just right, that refers to the Temple we were going to build and had not finished then. Yes, sir, I want to go on record as saying that these ordinances were revealed outside of a house,—revealed outside of a temple.

I cannot tell you anything about whether they were revealed before the Temple was built or not. That is the reason why the Temple was built here in Salt Lake City, so that the ordinances of endowment could be revealed in the Temple. Yes, sir, that is the exact reason. They could not be revealed out in the street or in anybody else's house.

I do not know that the Lord ever revealed to Joseph Smith that these endowments could be given in a house or room that was not built in the name of the Lord. Wherever the revelations from which you have read speak about endowments, it means the endowments that were given at Nauvoo, and that are given in Salt Lake,—always refers to the same thing; that is, I suppose it does; but when it speaks of the endowments of washing of feet and anointing with oil, I cannot tell you anything about that.

The ordinances of washing of feet and anointing with oil were before I came into the church. I expect that was revealed after the Temple was built perhaps. Since the Temple was built at Kirtland. I cannot say that it was revealed in the Temple at Kirtland. I have heard that it was, but of course I cannot say so, as I did not see it.

286 I believe what I hear when it comes from any of the officers of the church, just as I have been talking to you now. Now you have no right to dispute anything or everything I say because I consider I do not say anything but what I am at liberty to say. I am trying to give my testimony on these things the best I can, and tell everything that you ask me that I have a right to tell.

I believe everything that Brigham Young taught and that John Taylor taught or preached while he was president of the church.

Everything they said was the word of the Lord, I believe; it is a fact that when I am called on to repeat what they say was the word of the Lord, I repeat it as a fact. I believe what Joseph F. Smith tells me is the word of the Lord. When he says it is the word of the Lord on this or that subject, I believe what he says.

I was baptized the second time after I came out to Salt Lake. We were baptized the second time after we came out here, and then we had what we called a reformation, and then we were all willing to be baptized over again after that, so that we might start afresh again. Were all rebaptized in the reformation.

I do not know of any that were not rebaptized in the reformation. We were baptized when we first came out here in the new and everlasting covenant, baptized in the one that is spoken of in the Book of Doctrine and Covenants, Defendant's Exhibit A. There was nothing said about plural marriage particularly in our first baptism, because I suppose we were all professors of the religion, and had a right to be be baptized if we thought fit.

287 I do not know whether it was before or after the reformation that plural marriage was announced publicly to the church. I do not say that plural marriage was preached directly after we came here. It was preached in 1852, and we came in 1847, and that was several years before '52.

I have tried to find out for myself how long it was after we came to Utah before plural marriage was publicly preached, because when you were here the other day and asked me questions, I was afraid that maybe I had made a mistake, but by reckoning it from other things, I find out that the time that Orson Pratt preached that publicly on the stand, the first time it had ever been so taught was in 1852. It was when your aunt died, (now speaking to her daughter, who is sitting by the side of the witness.)

By witness' daughter: "She died in '52."

A.—Yes, my dear, I know it was that time, for I remember that at the time I was waiting on her sick bed.

Yes, sir, it was in 1852 that I first heard plural marriage preached, and that was the time that the revelation on plural marriage was submitted by Brigham Young to the church here in Utah for adoption, and I presume it is a fact that it was on that same day that Orson Pratt preached that sermon, and in the same building, and at the same time that Brigham Young submitted the purported revelation to the church for adoption.

I was rebaptized in the reformation of 1857. I would not say that it was because of the new and everlasting covenant that is mentioned
288 in that revelation on polygamy that we were baptized in the reformation of 1857. I would not swear either way on that subject, I cannot bring it to my mind as to how that was. I cannot say whether the endowment ceremony that was used at Nauvoo at the time I took my endowments there, and also at the time I took my endowments at Salt Lake, is the same as the endowment ceremony in the book marked Exhibit D, which you hand me. I suppose I know something about the ceremony, but I could not say this Exhibit D is the same,—I cannot see with my glasses on. I can see something there,—the pictures,—but I cannot tell what they mean. I cannot say whether or not I saw such things as represented in these pictures in Exhibit D in taking my endowments in Nauvoo, because I cannot see what they are.

289 Yes, sir, I saw the caps and moccasins that were worn by the ladies in Nauvoo while they were taking endowments there. I will not look at the pictures in Exhibit D to see if it is a representation of the caps and moccasins. I will not look at it, because I am afraid to look at it, and I do not want to look at it, because if it is true, it is something we never dared to draw or make any representation of, because it is sacred, and the Lord would never allow any such things to be without manifesting his displeasure or anger.

Q.—Well, it is here, and he don't appear to be particularly angry about it. Look at it and see if it is the same.

A.—I won't look at it, because I do not think it is right, and I do not think it is right for me to look at it. Yes, that represents the robe that was on the right shoulder, and that one that was on the left shoulder in taking obligations and the grips. I tried to avoid this investigation, and testified with reluctance, because these things are so sacred. They are too sacred for anybody to try to imitate. I do not say these are
290 sacred in this book, Exhibit D, but I do say the endowments are sacred, and nobody has a right to make light of them in any way, nor are they anything to be copied.

Q.—Well, I have not asked you to disclose anything you said or did yet, have I? I have not asked you to disclose anything you said or did that you took an obligation not to reveal, nor am I going to do that, Mrs. Thompson.

A.—Yes, I said I never saw anything like these pictures or this ceremony of endowment in Exhibit D, in Nauvoo, and I do not know anything about it.

Q.—Now, Mrs. Thompson, will you swear that the garments that are pictured here in Exhibit D are not the garments that are worn here in Salt Lake City in taking endowments?

A.—I would not swear. The ladies used caps here in taking endowments, yes, sir, and moccasins.

Q.—Let the records show that the daughter of the witness is urging the witness to leave the room.

By the daughter of the witness: "You are wanted out of the room, mother."

Witness: "Well, I will wait now until they are through. She is afraid I might say something that I ought not to say, and that is what she wants with me; but I won't say anything of the kind if I can help myself. She is afraid I might say something for want of recollection, and I would not do it if I knew I was going to do it."

BATHSHEBA SMITH, of lawful age, being produced, sworn, and examined, testified as follows:—

I live in Salt Lake City; before moving here, I lived in Nauvoo, in the State of Illinois. I moved to Nauvoo, in 1840, I think in the spring; I lived there until 1846. I never belonged to any church but the Church of Jesus Christ of Latter Day Saints. Joseph Smith, Junior, was the President of the Church of Jesus Christ of Latter Day Saints from 1830 to 1844, June 27.

291 I heard Joseph Smith once in speaking from the stand say or assert that the ancient order would be restored the same as it was in Abraham's day, but I never heard him preach in private or public the principle of plural marriage, or what is sometimes called polygamy. He said the ancient order would be restored as it was in the days of Abraham. That was about 1840, I think.

292 Yes, sir, I received endowments in Nauvoo, before the death of Joseph Smith. I received endowments in company with my hus-

band; I received my anointings in Sister Emma's bedroom, (by Sister Emma I mean the wife of Joseph Smith the prophet,) and then we went in the lodge room over Joseph's store, and he gave us lectures,—lectures on religious subjects.

CROSS-EXAMINATION.

294 I was born in Shinnstown, Harrison county, West Virginia, May 3, 1822. I lived afterwards in Caldwell county, Missouri, but never in Jackson county, at Independence. I lived at Far West, Missouri, or rather it was four miles out from Far West, south. I think it was in the month of October, 1838, that we went to Far West, and we left in 1839. There were a good many in the company when we left there; I could not say who all they were.

I think it must have been about 1843, when I first heard of the plural marriage system. I never heard of it before that time.

I think President Woodruff has a journal of his own that shows the endowments, the time I took my endowments in Nauvoo, but I do not know anything about the church records; I understand they disappeared a good while ago. It was in 1843 that I received endowments; do not know whether it was before or after the revelation of 1843, for I had not heard of the revelation.

295 I heard of a revelation on the question of sealing before that, and I had been sealed to my husband for eternity in 1843. I do not know where that revelation is, but I think it is in the Book of Doctrine and Covenants; but if it is not I have seen it, but I never saw it or read it before I was sealed to my husband. Yes, sir, I refer to the revelation on polygamy; I think it is in the Book of Doctrine and Covenants, too, but I did not hear anything about that revelation in 1842 or 1843. No, sir, I did not say that Joseph Smith in 1840 taught the principle of sealing; no, sir, that was the time I said he said the ancient order would be restored, speaking of the order of Abraham. I suppose Abraham had more wives than one,—according to the Bible he had. I do swear that Abraham had more wives than one at the same time. He had Hagar, and at the same time Sarah was his wife. I do not recollect what the Bible says about Hagar, but I suppose it calls her Abraham's wife. I do not know that the word *wife* is used in the Bible at all when reference is made to the woman Hagar, but I believe that the Bible states that Sarah gave her to Abraham as a wife; I am just as confident of that as anything else I have testified to. I am absolutely positive that Sarah gave Hagar to Abraham for his wife, and I am sure the Bible teaches that. Of course I do not know whether the Bible teaches that or not, but I believe it does. The Bible says that Sarah gave to Abraham her bondwoman, and I am sure I would like to know what it means if it does not mean that she gave her to him as a wife. The
297 Bible teaches also that the Lord told Abraham to put the bondwoman away, and I suppose the Lord did not approve of Abraham's transactions, or the bondwoman, if he told him to put her away. I do

not know that anybody found fault with the teachings of Brigham Young, that Hagar was the wife of Abraham, or thought that it was not so.

I did not need to be taught that Hagar was the wife of Abraham by Brigham Young, and the other officers of the church, I could read it, and did read it for myself. I read it in the Bible that Hagar was
298 the wife of Araham, that is the way I read it, and that is the way I understood it. I was sealed to my husband in Nauvoo in 1843, in Brigham Young's house. I was sealed by Brigham Young. I do not know who was present. I think it was in the last part of the year 1843. I was anointed in Emma's bedroom before that time; I was not sealed to my husband at the time I was anointed. My relation to my husband before the time that I was sealed to him was, that I was married to him for time, but not for eternity, and in the latter
299 part of 1843 I was sealed to him by Brigham Young for eternity. My husband's name was George A. Smith. I do not recollect what time in the year I received my anointing; that was what I was asking President Woodruff about, the other day, and he said he would find out for me, but he has not had the time to do so.

Q.—Now from whom did you receive your anointing?

A.—Well, I think it was from President Young the first time, and in the Temple.

Q.—Well, I mean the first time, when you were anointed in Emma's bedroom?

A.—Well, Sister Mary Smith (she was Brother Hyrum Smith's wife) anointed me. Well, it is my business just what she done, and none of yours; I cannot tell what the ceremony was. I will not answer the question as to what the ceremony was. The party who
300 anointed me in Emma's bedroom blessed me; she said I was a good girl. I decline to answer whether she poured oil on my head or not.

When I received my anointing in Emma's bedroom, Sister Mary Smith anointed me, poured oil on my head, and blessed me; that was all that was done, and all that was said. She just poured oil on my head and blessed me. At the time I was anointed by Sister Mary Smith I had different clothing on from what I wore when I went to the house first. This anointing was for the purpose of initiating me in the secret society and order of endowments.

302 The Order of Rebecca is a side degree of Masonry, for I think I had one or two degrees of it in that lodge. The Masons belonged to this new lodge or the endowments after Joseph Smith's death. Well, if the Order or Rebecca is an order of Odd Fellowship, it was not that. If it had anything to do with that, it was not Odd Fellows. The one I mean was connected with the Masons in some way. I do not think it was the Eastern Star degree of Masons. When we went into the hall where these endowments were given, there was no curtain separating the ladies from the gentlemen; we did not have any curtain at all. I did not take any oath or make any promises in Sister Emma's bedroom. Afterwards we promised not to reveal our

303 endowments, or tell what it was. The promise was not part of the endowment ceremony. I took as much of an oath not to reveal the ceremony of endowments, as much as I have here promised not to tell the truth.

Q.—Not to tell the truth?

A.—I mean to tell the truth. I was sworn there not to tell it, and I am sworn here to tell it. The law of the church at that time was against secret societies.

I do not know that Joseph Smith ever taught the doctrine of blood atonement in his day; I do not know anything about that; I never heard him teach or preach the doctrine of blood atonement. I do not know
306 whether the doctrine of blood atonement was taught in the Utah church by Brigham Young or not. Yes, sir, when Joseph Smith preached from the stand in 1840, he preached that the ancient order would be restored, the order of Abraham, and if polygamy is what Abraham practiced, why then he preached polygamy. He did not say that the ancient order meant polygamy; did not talk about polygamy; did not
307 say anything at all about polygamy, and I never heard Joseph Smith teach polygamy, nor did I ever hear him say anything about it, either publicly or privately.

I never saw him sealed to anybody, and I lived in Nauvoo from 1840 up to the time the church left there. I knew Emma Smith; I believe she was his wife, but I did not see them married. She was held out there as his wife; lived in the same house with him. She was called Sister Emma, the wife of the prophet, and I have no doubt but that she was his wife; and although I did not see them married, there is not a particle of doubt in my mind but that she was his wife.

There was nobody else held out as his wife while I was living in Nauvoo, nor down to the time of his death. I was in Nauvoo at the time of his death; did not attend the funeral. I do not know of any member of the church having more wives than one at Nauvoo, during the life time of Joseph Smith. I heard some little talk not much
308 before their death. I lived there from 1840 up to the time he died. I never heard of any such a thing.

I belonged to the Ladies' Relief Society in Nauvoo. Sister Emma, Joseph's wife, never taught the Ladies' Society polygamy.

I heard of the John C. Bennett secret wife doctrine; the church authorities denounced that at the time, and they denounced Bennett for that doctrine, and cut him off from the church, and preached against it,—preached against it publicly right there in the city of Nauvoo, at the time, Joseph Smith and the rest of them,—and particularly Joseph Smith,—he denounced him. His denunciation of the John C. Bennett secret wife system may have been published in
309 the *Times and Seasons*, and I may not have read it, and I might have read it, and not remember it now.

I did not believe in the John C. Bennett secret wife system; did not want to know anything about it. There was a great deal of

commotion there in Nauvoo about the John C. Bennett secret wife system. The *Times and Seasons* was the church paper at that time; I did not take it at that time, and do not think I read what you have described; I may have read it, but I do not remember one word of it if I read it. There was a great stir in the church at that time; the church published him, and expelled him, and they preached against
310 him from the stand, and against plural marriage, the secret wife system, secret marriages. The spiritual wife system was the system by which a man had two wives at the same time.

At that time there was so much said about the John C. Bennett wife system that I can't say what it was, there was no other rule with reference to marriage practiced in the church, other than that set forth in the Book of Doctrine and Covenants, not to my knowledge. That was the only method contained in the Book of Doctrine
312 and Covenants, and I was married by that myself. The sealing that was practiced by the church under Joseph Smith was the sealing of a man's wife to her husband; he did not teach the sealing of somebody else's wife to my husband. Joseph Smith and my husband were first cousins and I visited at his house very often.

315 It is a doctrine of the church taught here now in Utah Territory under the administration of President Woodruff, that a woman cannot be exalted in the hereafter, or a man, unless they are sealed. That is we believe they cannot be exalted to the Celestial Kingdom, that is they will be alone, the man will be alone, and the woman will be alone, that is what the church teaches, here. Yes, sir, President Woodruff, President Young, and President John Taylor, taught me and all the rest of the ladies here in Salt Lake that a man in order to be exalted in the Celestial Kingdom must have more than one
319 wife, that having more than one wife was a means of exaltation. I never read the revelation on polygamy when I was in Nauvoo, never saw it when I was there, never saw it in print or any other form, never saw it at all until I came here. My husband was a counselor to Brigham Young.

This revelation on polygamy was publicly submitted to the church
327 in Utah Territory in 1852, at a conference held in the Tabernacle in this city, and was submitted with a public declaration of Brigham Young himself, that he kept it under lock and key, and nobody knew of its existence except himself. That declaration is in the *Journal of Discourses* preached by Brigham Young at that time, but I do not have any recollection of it, that is of reading it.

Yes, sir, I have been in the endowment house here at Salt Lake City about fifteen years, during that time I have trained myself and other ladies. I do not understand all about endowments, but I
328 understand a good deal. Yes, sir, I know how the ladies are dressed in taking endowments, they are dressed differently from what they were when I took my endowments in Nauvoo, but that does not make any difference in the ceremonies, for the ceremonies are the same.

Yes, sir, George A. Smith, my husband, had more than one wife,

and I gave my consent to his marrying more than one; he had five at one time.

I know Mrs. Mercy B. Thompson; she lives in Salt Lake City, three blocks west and one north of the Templeton Hotel. I have known her over half a century. I knew her in Missouri, and in Nauvoo; I knew her when she was Robert Thompson's wife.

I knew her when she was the wife of a man by the name of Lawson. When I came to the valley she was the wife of Lawson, that was in 1849, she was living with him then. John Taylor was living at that time; John Taylor and Lawson were living here at the same time, both of them.

I do not know that Mrs. Thompson was ever married to John Taylor, but she was married to Lawson, I think. I do not think they lived together until Lawson died; he is living yet I think. They
346 parted several years ago, and I do not know where Lawson is. It is not a law of the church that a woman can have two husbands living at the same time. I was acquainted with Joseph Smith's family intimately in Nauvoo; my husband was a first cousin of Joseph Smith, and I was well acquainted with the family. I knew his children, Joseph Smith, David, Alexander, and Frederick, I did not know any children of Joseph Smith except these; they are all that I knew.

---

348 EMILY D. P. YOUNG, of lawful age, being produced, sworn, and examined, testified as follows:—

I live in Salt Lake City, Utah Territory; before coming to Salt Lake I lived in Nauvoo. Coming out here we stopped at different
351 places on the road; moved to Nauvoo, Illinois, I think, in 1839; lived there until 1846.

CROSS-EXAMINATION.

I was born in 1824; was baptized into the church when I was eight years old, in Independence, Missouri. I wrote my own history as
353 published in the historical record; I have seen it in the record. I went from Jackson county, Missouri, to Clay county, in Far West. After we left Clay county, we went to Caldwell county, and the Saints built up Far West after we went there. There was no Far West when we got there, but the Saints built it up afterwards. I think it was in 1839, that I left Far West.

We went from Far West, to a place called Quincy, Illinois; from Quincy we went down to Pittsfield, in Pike county; that was in Illinois. From Pittsfield we went to Nauvoo; I am not positive of the year; I think it was in 1839, but I am not positive as to that. My father died in 1840, and I think it was the year before we got there, that is we got there a year before he died.

354 Yes, sir, my father was one of the first officers of the church, and the Presiding Bishop,—first Bishop of the church. I heard my father preach a great many times; I never heard my father either

preach or teach in public or private the practice of polygamy, it was not known in his day.

My father's name was Edward Partridge. I was married to Brigham Young in November I think, 1844. I was not married in the Temple because the Temple was not built at that time; it was in process of erection, but it was not finished, so that we could be married in it. At the time I married Brigham Young, in November, 1844, I was at the same time sealed to Joseph Smith, sealed to him for eternity; I was sealed to Brigham Young for time, and to Joseph Smith for eternity. The manner that I was married to Brigham Young is what is known as marriage by proxy; that is what I considered it meant; that is, I was sealed to Brigham Young that day, during my natural life, and in eternity I was to be the wife of Joseph Smith. I was not married to Joseph Smith under the revelation on sealing, but I was married to him under the revelation on plural marriage. I was married March, 1843; on the 11th day of March, I think it was.
383 I know I was married to him under the revelation of plural marriage. I was married to him on the 11th day of May, 1843.

Q.—Now, I would like for you to explain how you were married to Joseph Smith under the plural marriage revelation when the church you belong to claims that revelation was not given until July, 1843; just tell how you could be married under a revelation in March that was not given until July.

A.—Well, I do not know anything about that.

---

392 JOSEPH B. NOBLE, of lawful age, being produced, sworn, and examined, testified as follows:—

I reside in Utah Territory, in Davis county; I live in a place called West Bountiful. I lived here in the city of Salt Lake for a time before moving out there. Before I came to Utah Territory I lived in Nauvoo. I moved into Nauvoo in 1841, from Lee county; I resided in Nauvoo until 1846. At the time of the exodus I left there. I belonged to the church while I lived there. It was called the Church
393 of Christ, that is what we called it. I was the Bishop's counselor, one of them, when we organized there. Judge Elias Smith was the Bishop. I remained in Lee county, Iowa, until 1841, then I came across the river to Nauvoo. After I came across the river I held the office of Bishop in the fifth ward. I held the office of high priest also.

CROSS-EXAMINATION.

396 My name is Joseph Bates Noble; I was born in Massachusetts, Berkshire county; first joined the church in 1832, in Ohio, at Kirtland; was baptized by Joseph Smith. I cannot tell anybody who was present at the time I was baptized, except my wife and my wife's sister. We left Kirtland for Missouri; that is one of the things I am
398 sure of, in 1838, I think. I lived in Kirtland three or four years. I was attending a mill there.

I suppose the reason I know and can recollect about polygamy is because I have been connected with the commission of that crime myself. And my conscience is having a terrible gnawing fit this morning.

399 I do not know that I can tell you the time I went to Far West, Missouri, but I am under the impression it was in 1838. I did not make a very long stay at Far West. I can hardly tell whether I was an officer in the church when I came to Missouri, or not. I have been trying to call it up.

Yes, sir, I am tolerably hard of hearing now; I am just about half sick, that is the honest fact about it. I think you had better adjourn this examination and let me go until another time.

400 I have forgotten about all I ever did know with regard to dates, but my recollection is that we left Far West, Missouri, in 1839. As to who came out there with us, I am trying to call that up now; it is considerable trouble to tell these dates. The first place we stopped at after leaving Far West, was Commerce, Illinois.

Hyrum Smith came out of Missouri with me, and Joseph Smith came out with the crowd, too. Now hold on, and let me see about that; I guess they were in jail at that time.

Q.—Well, I do not know anything about it, and that is the reason I am asking you about it.

A.—Well, I remember of moving Hyrum up to Commerce, and I 401 suppose Joseph was in jail at this time, but I cannot say about Hyrum being in jail.

Q.—Now do you not know that neither of them were with you when you left Missouri?

A.—I do not know, by George.

Q.—By whom?

A.—Oh don't take me up too quick, I said I did not know, by George; that is an expression of mine; they were in jail I remember that now.

I am an elder in the church here in Salt Lake now, and in good standing I guess.

Q.—What was the law of the church on marriage when you were at Quincy, Illinois?

A.—The law of the church?

Q.—Yes, sir, the law of the church; was it polygamy? Will you answer the question?

A.—My head is so bad I cannot think of anything. I cannot tell you what the law of the church was; my head is so bad.

Edward Partridge was the first Bishop of the church I know of. Yes, sir, there was some money raised for the purpose of buying land 403 in Missouri, at the time I was in Kirtland, Ohio, and it was sent to Bishop Partridge in Missouri.

William Marks was a prominent man in the church at that time, and a moneyed man at that time, too. N. K. Whitney and Edward Partridge were both bishops in 1833, at the time they were raising

money to buy land in Missouri; might have been a little before or a little after 1833.

There was some money raised for that purpose and sent to Missouri, and I learned afterwards that land was bought, and the land was set apart and dedicated for the Temple.

I heard about that, and that it had been dedicated to the church.
404 I heard it preached from the pulpit, but how deep, and how far, and to what extent, I do not know now.

I never was in Jackson county, Missouri. I have seen the county from looking at it from Clay county.

I was with "Zion's Scamps," that is what I called them. I expect there were some scamps about it.

I never heard Brigham Young say much about the Temple Lot. Zion's Camp was in Clay county; I do not know how far it was from Independence, Missouri, but by getting on an eminence there, you could look over into Jackson county, and so it could not have been very far. I guess the Missouri River was all that separated the two places.

405 I did not go into Jackson county, because the church had just been driven off its lands there, and we were not permitted to go there.

The Saints had been driven off their lands, and Zion's Camp went up there to see if they could be reinstated. There were a good many of the people that had been mobbed out of the county. The reason I did not go into Jackson county was that we did not consider it safe to go there.

406 I went to Clay county in 1834; stayed there long enough to have the cholera; some of them died. We left Clay county in 1834; dogged if I can tell what month it was; that was nearly sixty years ago.

When we left Clay county we went into Caldwell county. I went from Clay county back to Kirtland, Ohio; got my family, and then went into Caldwell county. It was in 1838 that I moved to Caldwell county.

407 I was married by a Presbyterian preacher, and he married me all right and tight, beyond a question. I went out to Far West, Missouri, in 1838; took my family with me.

I left Caldwell county in 1838; was kicked out, pitched out, knocked out; at any rate I got out, never could tell very well how it was that I did get out, but I know I was in a hurry, that is the way the whole church went out.

They were not permitted to go back into Jackson county.

From Far West, they were driven from the State of Missouri; ordered to leave the State and never to return; were driven out of Missouri, on the order of the Governor.

408 I was not married according to the laws of the church. I do not know that we had any law in the church at that time as to who should perform the marriage ceremony. There was none at that time that I know anything about; guess we got that law afterwards.

There was a section in the Book of Doctrine and Covenants relating specifically to marriage, and stipulating how it should be performed, but that was not published at that time, at the time I had that wedding in 1838. I have read the Book of Doctrine and Covenants, but I do not remember all the things that are in it.

409 The book handed me is the Book of Doctrine and Covenants, Exhibit E. It was published in 1835; by ginger, it is as much as I can do to see it, but I think it is 1835. I was married after that,—was married in 1838. Well, let me see, I was mistaken about that, for, by golly, it was in 1834 when I first went up there, and that was the time I saw the manuscript of the Book of Doctrine and Covenants, but I had it in my noggin all right that it was in 1838.

It was not a doctrine at that time that any minister could perform the marriage ceremony; that was no doctrine, but it was simply a practice. We were not after doctrine at such a time as that.

410 I commenced hunting a wife in 1838, and I do not know as I have quit yet. I do not know that we were tied down here in Utah particularly as to the question of who should perform the marriage ceremony, and never were tied down that I know of.

I do not know of any minister of any other denomination ever performing marriage ceremonies for persons who belonged to the Utah Church, but of course it depends on how much faith we have whether we get a Latter Day Saint minister or a Methodist minister to marry us.

After I went to Nauvoo, I stayed there a little time before I crossed the river into Iowa, and went to Montrose. My best recol-
411 lection of the time is that it was 1838, maybe 1839, when we got to Montrose. The first time I went to Nauvoo to live, was in 1841.

I do not know that it was the law of the church up to the time Joseph Smith was killed, that all legal contracts of marriage made before a person is baptized into the church shall be held sacred and fulfilled; do not know anything about that law.

I was an elder of the church, a high priest, and the Bishop of the fifth ward in Nauvoo.

414 I did not know anything about what the law was; I was not much of a scholar; I did not go to books much; I guess I did not teach the laws of the church out of the book; I guess I had enough without the book, and knew enough without that.

I taught every man to mind his own business devilish close, and that was good teaching, too.

I think I am an elder in the church; an elder in the church here can use that kind of language; yes, sir, sometimes there are occasions to use it, I think.

I did not teach either publicly or privately there at Nauvoo, that a man could have more wives than one; I did not teach it at all. No, sir, I guess not; not much I did not teach it. My head hurts me when I try to think of these things that I cannot remember.

I guess it was not safe for a man to teach that kind of a doctrine,

415 that a man could have more wives than one; you had to be pretty careful about what you taught. I never heard Joseph Smith teach the church the doctrine of polygamy, or that a man could have more wives than one, either publicly or privately.

I said the other day in my cross-examination that Louisa Beeman
416 was sealed to Joseph Smith in 1840, and that I performed the ceremony; to-day I am inclined to think it was a little later than that. I said the other day that it was when I lived in Iowa, and that I moved from Montrose to Nauvoo in 1841. I lived in Iowa in 1840.

Well, if I said the other day that Louisa Beeman was married at my house across the river from Nauvoo in 1840, I must have been mistaken, and did not understand the question. Well, I will settle down on the date that Louisa Beeman was married in 1841 or 1842. We received the law through Joseph Smith; he was the law, and he gave us the law. He gave the law to the church.

I lived in Nauvoo in 1844. I heard that Sidney Rigdon, he was one of the Twelve at that time, had sent in a pamphlet to Nauvoo,
417 containing quotations from the Bible, the Book of Doctrine and Covenants, and the Book of Mormon, and it was answered in the church to which I belong, but I do not recollect much about it.

I do not recollect about the editorial of John Taylor's, that you read from the *Times and Seasons*. The *Times and Seasons* was the official church publication at that time, and in it is the editorial of John Taylor; he was the editor at the time, and was one of the Twelve. The publication appears to be November 15, 1844. I do not know whether the facts stated there are true or not; I do not recollect anything about it; I have told you that a good many times.

I do not know anything about any law of the church at that time
436 that authorized polygamy. I do not know very much about the law of the church at that time, and I do not know very much about it after 1844: regarding the law of the church at that time, I am frank to say my stock of knowledge was very limited.

I know that the polygamous revelation was adopted by the church here in 1852, but I do not think I voted there; I guess I was off on a mission somewhere; I was in the State somewhere, I think, in 1852,
437 preaching,—preaching the law of the church, but I did not preach polygamy, never did preach it, or practice it much either, just occasionally, kind of cut around the corners; never did preach polygamy from the pulpit in my life.

I do not recollect of hearing anybody preach polygamy from the pulpit while I was living in Nauvoo; could not if I was going to be hung on a gallows say that I ever did. I do not think I ever heard anybody preach it in public in Nauvoo; I do not remember anything of that kind.

I came to Utah in 1847; was at Winter Quarters in 1846 and 1847,
438 at Council Bluffs, and at a place called Florence, on the west side of the Missouri River.

I was at the conference held at Winter Quarters in 1846. I sup-

pose if Brigham Young was elected President, and voted on at that conference, I saw it; but I swan I cannot tell you for certain, and I swan I cannot tell who were made his counselors, for my head is so bunged up I cannot think of anything.

I guess Heber C. Kimball and George A. Smith were appointed as counselors. Before that time they were members of the Quorum of Twelve, as was also Brigham Young, and taking out of the Quorum of Twelve Heber C. Kimball, George A. Smith, and Brigham Young, that left only six of the original Quorum of Twelve that were at that conference.

I do not think I ever saw John E. Page, William B. Smith, or Lyman Wight at Winter Quarters; I guess they went off before we got there; think they left the church before we got to Winter Quarters.

We came across the plains and got here in Utah in 1847, and some of them in 1848, and some in 1849. I cannot tell you whether we had a President of the church when we came out here or not; we did not have a President for our church when we left Nauvoo.

I was not here in Utah very long before I was baptized the second time; we went right to baptizing the members the second time as quick as they got here; baptized for remission of sins, follies, wickedness, and I do not know what all.

440 Reordained them into the church again. I was not reordained a bishop; I might have been reordained as an elder, or confirmed as an elder. Rebaptized or reconfirmed of what I had been.

I have been rebaptized for my nonsense a good many times, and am going through again as soon as I get through with you fellows, for I know I will need it when I get through,—need it badly. I will feel kind of relieved, you know, and after I have gone through it will not harm me any.

I will be rebaptized for the remission of my sins; perhaps I have committed so many during the taking of my testimony, that I will feel the necessity of it, and it would not be amiss, I think, if a pair of us were rebaptized. I will first attend to rebaptism for my own imperfections and let the rest of you fellows attend to yours or go to Tophet. It is my idea now that I shall be rebaptized when I get through with the taking of my testimony.

441 I do not know whether I was rebaptized after I came to Utah into the new and everlasting covenant or not. What questions you ask a a fellow—is there no end to them? I cannot tell you whether I was baptized into the new and everlasting covenant or not. The reason I have been baptized so many times is because I supposed I needed it. I cannot tell you now whether I was abusing Joseph Smith up here at the Hot Springs after I left the witness stand the other day,
442 —all these questions of yours makes me boozy.

I never heard such a streak of nonsense in my life; they say there is an end to all things sometime, but there is no end to your nonsense; that is my opinion. Yes, sir, there is something I have been taking that makes me boozy.

What I mean by reformation here in Utah, is that we people resolved to do better in the future, like your people should do but do not. When we came here in 1847; we agreed to live and do better, and we did do better for a while; but when we come across such good-looking, fascinating fellows as you are, we cannot do better then. When we come across men like you, why then good-bye to our good intentions and efforts.

I do not know whether I ever saw you before 1857 or not; but it seems to me that I have seen you somewhere before.

I do not recall the time that Brigham Young divorced all the wives in the Territory from their husbands.

144 I live about ten miles from Salt Lake City. Since I came here I have not attended church here very often,—not once in a coon's age. We have our own place of meeting, and do not have to come here unless we want to do so.

When I was living in Nauvoo, during the lifetime of Joseph Smith, it was not a law of the church that Joseph Smith could grant
145 divorces. Joseph Smith never did anything like that.

You will have to look at the records to tell how many times I have been married. My first wife's name was Adeline Beeman, and I do not think it is any of your business who the next one was, I will have to search the records to get them in rotation.

I cannot tell you the name of my second wife because I am so dizzy,—it would take angels to find them all.

I did not say I could not tell the names of all of my wives, I might tell some of them. I do not think I could tell the names of any of them, and I swear that I will not tell, just for your damned nonsense.

146 Yes, sir, I am an elder in the church and I am swearing in court; I do not know who would not swear, after such a tornado of nonsense poured into him. I am swearing because I am indignant, and you have no rights here anyway.

I said it was none of your damned business because your question was so nonsensical. No, sir, I will not tell the names of my wives, just because I will not. Just because it is none of your damned business, I will not tell you the time I married my second wife.

I could not begin to count how many I have had, I have never been divorced from any of them. It is none of your business whether I have had more than two wives living at the same time, and I refuse to answer that question, because it is none of your business.

I cannot tell the date that I took my first plural wife; I cannot tell whether it was in 1845 or not; cannot tell because the dates bother me. I do not want to answer the question whether I was married in
147 the Temple at Nauvoo, or not; it might tend to criminate me if I answered that question, and I will not answer whether I took any endowments in Nauvoo; that is an improper question.

Yes, sir, I have married women and agreed to take care of them for time, and surrender them to somebody else in eternity.

No, sir, I was not out yesterday attending to my work; I do not

pretend to attend to a darned thing; I do not preach very much, a little sometimes.

No, sir, I did not say that I did not preach a darned bit. I am an elder and a high priest here in the church in Utah.

---

448 LUCY W. KIMBALL, of lawful age, being produced, sworn, and examined on the part of the Defendants, testifies as follows:—

I reside in Logan at present; my former home was Salt Lake. Logan is in Cache county, in Utah Territory. Before moving to Salt Lake City I was in Nauvoo; came from Nauvoo to Provo, and then to Salt Lake City. I was a member of the Church of Jesus Christ of Latter Day Saints at Nauvoo; moved there in 1841, came
449 away in 1846. The doctrine of polygamy was taught to me personally in Nauvoo, and I was married to the Prophet Joseph Smith. William Clayton performed the ceremony, and I accepted it as a special commandment from God.

The marriage was performed on the 1st day of May, 1843. The only witness to the ceremony was Eliza Partridge.

CROSS-EXAMINATION.

451 I was born in Vermont in 1826; became a member of the church when I was nine years old, in Ogdensburg, New York. I was born the 30th day of April; my father's name was John Walker. I united with the church in 1835. The first time I ever saw Joseph Smith was in the spring of 1841.

I do not remember the month when I first came to Nauvoo and saw him for the first time.

Q.—And you never at any time saw Joseph Smith until 1841?

A.—I did not see him before that time.

Q.—And yet you swear that he received a revelation on polygamy in 1831, and you swear that you did not see him until 1841, is that what you swear to, Mrs. Kimball?

A.—Yes, sir, that is what I say, and all I know is what he said. I never saw any such a revelation during his lifetime. I will correct that. I saw that revelation at our house in Nauvoo, in 1842; it was in writing; I mean it was not written to present to the church. It was written later than that. Of course it was written when I saw it
452 in 1842; that is, it was in manuscript. Of course I am sure it was the one on plural marriage, just as positive of that as anything else I have sworn to; there is no doubt about it at all. Well, now I would not be positive as to just the time,—that is, as to the express time, but I know that it was not written. It was not presented to the High Council for their acceptance until, I think, 1843.

453 *Q.*—Do you not know, Mrs. Kimball, that you have not a scrap of writing anywhere, and you never saw a scrap of writing of the proceedings of the High Council, or any meeting of the High Council before the death of Joseph Smith, showing that this revelation on polygamy was ever presented to them? Do not you know that you have no such a document as that?

A.—I can send you the testimony of those who were present. The record of the High Council was not published before the world.

If I can find a record of the proceedings of the High Council in
154 1843, or 1844, between this date and the first day of next September, I promise you that I will send it to the Commissioner who is taking my testimony; I mean the record showing that this alleged revelation was presented to them for their adoption. The statement of the proceedings of the High Council as they were written down at the time, which shows that this revelation was presented to them for their adoption. If I cannot do that, of course you do not want an affidavit.

I understand exactly what you want, but I am not sure that there is any such a document in existence. I cannot say that I have it, but I will make search for it, and if I can find it I will send it to you with pleasure. I think the record is in the *Times and Seasons*.

The paper that I am thinking of, or the record, is a printed affidavit, that I refer to now, and as for being positive that I have the proceedings of that High Council in book form, I could not say.

155 The affidavit I refer to, is that of Leonard Soby. The affidavit which you hand me is the one to which I referred. The paper that contains the affidavit of Leonard Soby which you now hand me was published January 21, 1886. I have not the affidavit of Leonard Soby made in 1843, or 1844.

I will say that after I return to my home if I can find the original minutes of the High Council held in Nauvoo, I will send them to the Commissioner who is now taking my testimony. I think I have in my possession some of the records of the High Council prior to 1844. It is in printed form, as a matter of course; it is in the *Times and Seasons* and in the *Millennial Star*. These are the books of the church that I referred to as containing the minutes of the High Council; there are no others that I referred to that contains anything about the High Council, and when I refer to the church records I refer to what is in the *Times and Seasons*, and in the *Millennial Star*.

I was never in Jackson county, Missouri, nor in Far West, Missouri. I do not believe I went to Nauvoo before my fifteenth birth-
156 day. My birthday would have been the 30th of April, 1841. I do not remember whose house we lived in first after we got there. After my mother's death I lived in the house of Joseph Smith.

My mother died in January, 1842. I was in Nauvoo about a year before my mother died. My mother and I lived in our own house until after she died; after that I lived with the Prophet's family, from that time up to the date of his martyrdom.

I spent most of the time with Don Carlos Smith's widow, after the death of Don Carlos.

157 I made my home in the Nauvoo Mansion; that is, after we moved in the Mansion. I do not know that there was any numbers on the rooms at all.

I do not know that I was acknowled as a member of the family. I

do not remember how many rooms there were in the Mansion; could not tell you whether there were a dozen or fifteen, or only six. My recollection is there were four in the front part of the house, and a large dining room and two chambers. I do not know how many rooms there were in the house.

I lived in the same part of the house the family did; took my meals in the same place, roomed there in the same house. We had our own private rooms. I roomed with my sister. My sister and I both went there about the same time. I stayed there until my oldest brother married; he married in 1843, in the fall of 1843; I think it was in August. After he got married I went and stayed with my brother; my sister remained there.

458 *Q.*—Then what you stated a while ago that you had lived with Joseph Smith from the time of the death of your mother up to the time of his death, is not true?

A.—I did not live under the same roof. We always considered it as the family, for my brother always lived there up to the time that he married, and lived there until some time afterwards, and that is how I had the privilege of going and staying with them,—with my brother's family.

From the time that my mother died up to the time that my oldest brother was married, my sister, brother, and myself lived in the house of Joseph Smith.

Besides Joseph Smith's family, that is, his wife, Emma, and her children, there were two of Bishop Partridge's daughters there; they stayed there all the time; that was their home. I am not sure that they stayed there until his death, nor am I positive whether they lived there constantly or not after my brother was married.

The prophet's family in addition to himself and his wife, Emma, and their children, consisted of myself, my sister, and my brother, and two of Bishop Partridge's daughters. I had two brothers there.

459 And before 1842, and the time he died, the Lawrence sisters were there, a part of the time at least. Two of them were there the same time I was.

Joseph Smith kept a hotel at that time; neither myself, my sister, nor the Lawrence girls were employed there for any purpose; that was our home.

We did not move into the Mansion House until the fall of 1843, November I think; before that we lived in what was called the Prophet's House, or the Prophet's Home; that was quite a large house, that was not a hotel building.

The Lawrence girls were married to the prophet, too. I was not at their weddings.

Weddings were not performed publicly in those days. I think I was present when I was married to him. The Partridge girls were married to him also. I cannot say whether we were all married to him in 1842 or not. I have no recollection about it.

I was not there when they were married to him; I know that they

461 were married simply from hearsay; I cannot tell which one married him first. It was the 1st day of May, 1843, when I married him. I do not know what time Emily D. P. Young married him; I do not know anything about their affairs. My sister was there at the Mansion when I was married, but she was not present; she knew nothing about it. Elder William Clayton performed the ceremony.

462 Emma Smith was not present, and she did not consent to the marriage; she did not know anything about it at all.

No, sir, she did not know anything about my marriage to her husband. I shall not answer your question as to what room I occupied on the 1st day of May, 1843, after my marriage. I decline to answer whether I occupied the same room with Joseph Smith on the night

463 of the 1st day of May, 1843. I decline to answer whether I ever occupied the same room with Joseph Smith, either on the night of May 1, or any other night, and there is no law that will compel me to do so, or upholds you in intruding into my affairs. I decline to answer your questions because I consider them insulting; yes, sir, I do.

Q.—Your feelings have grown more delicate now than they were forty-eight or forty-nine years ago; they grow more mellow and refined with age.

A.—I do not know about that.

Q.—Your feelings were not so tender when in 1843, you married a man who at that time to your knowledge had four or five other wives, and imposed yourself upon his innocent wife, and deceived her, by joining in that kind of an alliance with her husband,—that was not insulting,—but now when I ask you a question, which under the law I have a right to ask you, you say it is insulting.

A.—Not in the light that we accepted it. He introduced me as his wife to Heber C. Kimball and Brigham Young; they are both dead. I cannot name a single, solitary man, either an apostle in the church, or any other man or woman now living to whom I was introduced by Joseph Smith as his wife.

464 There is not a single solitary individual living, whether in or out of the church, or who was a member of the church at the time of Joseph Smith's death, to whom he ever introduced me as his wife,—the marriage was not made public.

I did not attend church with him as his wife. I was at the funeral of Joseph Smith; I cannot tell anything about who preached the sermon; I cannot tell anything about whether there was any sermon preached or not.

I remember very little of the services. I cannot tell whether there

465 were any services or not; cannot tell whether Emily Partridge was present; cannot tell whether Elizabeth Partridge was present or not.

I know where he was buried, but I decline to answer the question where it was. I decline to answer because I do know, and I will not tell you. That is my business whether I have taken any obligation not to answer that question or not. I decline to tell you who told me

where he was buried, and I decline to answer any question about where he was buried.

I decline to answer any questions on that subject whatever, because
466 I do not wish to do so. I decline to answer the questions because the circumstances were very trying, and you should not ask me questions like that. I will not answer, and that is all there is about that,—that is all there is about it.

Q.—You attended the funeral as Joseph Smith's wife, did you?

A.—It was not known or acknowledged that I was his wife; I did not attend the funeral as his wife, of course I did not; and if the records of my testimony show that I stated that I attended the funeral as his wife, it is a mistake, for I did not say any such a thing, nor I did not intend to, for it is not true. I did not appear there as his wife, no, sir.

I never went by the name of Lucy W. Smith; I went by the name
467 of Lucy W. Walker, and the Lawrence girls went by their maiden names. I was known here in Salt Lake City as Lucy W. Smith; the time never came for me to be known as Lucy W. Smith, until we came to Salt Lake City.

I was married to Heber C. Kimball in 1845, in Nauvoo; do not think I can tell you the exact date. I was married in the Temple; Brigham Young performed the marriage ceremony.

I decline to answer the question who I married before I married Heber C. Kimball, or how many times I married. I never asked Mr.
468 Kimball how many wives he had at the time I married him. I do not know how many he had besides myself after I married him. I never asked him whether he had more wives than me or not.

There was not any love in the union between myself and Kimball, and it is my business entirely whether there was any courtship or not. It was the principle of plural marriage that we were trying to establish, a great and glorious true principle, and if we had established it, it would have been for the benefit of the whole human race, and the race will say so yet.

Yes, sir, and the day will come when you will doff your hat to the plural wife system. Yes, sir, I know that. Well, you will need to apologize to me for what you have been saying.

471 I am proud of my associations in that regard and have nothing to fear or be ashamed of either in this world or in the world to come. That principle is as sacred, as holy, and as divine as God himself, and you will see the day when you will acknowledge it.

Q.—Well, then, if that principle is as true and as holy as God himself, how is it that the church went back on it and said that the Lord did not command it at all.

A.—Well, the church will see the day when it will apologize for that. Yes, sir, I did consent to the Manifesto with the rest of the church to President Woodruff, much to my regret, but I am not going to acknowledge it again; the time will surely come for that principle to rule.

I have nine children by my marriage with Kimball. I am as proud to know that I practiced polygamy as I am to know that I was the wife of Heber C. Kimball, and he was as noble a man as ever stood on the earth.

Sarah Lawrence also married Heber C. Kimball; I do not know whether she married him before I did or not; I made no inquiries, for it had nothing to do with me at all. Yes, sir, Joseph Smith
472 taught me the principles of polygamy in 1842, at the old house where we lived, before the Mansion House was built or finished.

Q.—Was there anybody present when he taught you that?

A.—Well, here, sir, that is my business, and you have no right to pry into it; no, sir, you have not; that is another question I decline to answer. It is my business what he said, and none of yours.

He said that the principle would be established, and the time was near when it would be established.

473 I shall not say a thing about what he taught me about polygamy, for that is my business, and not yours. I decline to tell you anything about that, because it is my business, and because you are asking these questions simply for the purpose of worrying me.

I do not think that is merely an assumption of mine, but this is all sacred to me, and for that reason I decline to tell you anything about it.

President Woodruff asked me to come here, and I supposed all you wanted to know was if Joseph Smith had more wives than one; what he taught me is what I will not tell you. I testified that I was his wife, and that is the truth, and I know that I am to be eternally his wife.

Well, it is none of your business if we had twenty children, and it is none of your business if we did not have any. I do not consider young Joseph Smith to be my son because of the fact that I married his father.

474 He told me himself that his father had no more wives than his mother, and he knew at the time he said that, that he was telling a falsehood.

I heard him say in his lectures at Logan, that the question was not whether his father had more wives than one, but the question was, Was it right to have more wives than one. I used to read the church paper in 1842, occasionally.

475 I recollect hearing about the John C. Bennett secret wife system, when I was living in Nauvoo, I heard of his scandalous behavior. I do not think the principle of plural marriage had anything to do with the John C. Bennett practice. I had nothing to do with him or his scandalous doings. I think he was a wicked man, because he acted in a corrupt manner, as I understood it. I cannot say it was because he had more wives than one; I do not know anything about his affairs.

I knew all the persons who signed the certificate published in the *Times and Seasons* on the 1st of October, 1842, as follows:—

476 We, the undersigned members of the Church of Jesus Christ of Latter Day Saints, and residents of the city of Nauvoo, persons of families, do hereby certify and declare that we know of no other rule or system of marriage than the one published from the Book of Doctrine and Covenants, and we give this certificate to show that Dr. J. C. Bennett's "secret wife system," is a creature of his own make, as we know of no such society in this place nor never did.

That is in the *Times and Seasons* that was identified by President Wilford Woodruff while on the witness stand yesterday. That is signed by President Wilford Woodruff, and thirteen other prominent members of the church. I also knew all the ladies, most of them personally, who signed the certificate published in the *Times and Seasons*, October 1, 1842, as follows:—

477 We, the undersigned members of the Ladies' Relief Society, and married females, do certify and declare that we know of no system of marriage being practiced in the Church of Jesus Christ of Latter Day Saints, save the one contained in the Book of Doctrine and Covenants, and we give this certificate to the public to show that J. C. Bennett's "secret wife system," is a disclosure of his own make.

This certificate is signed by Emma Smith, wife of Joseph Smith, and twenty-nine other ladies who were prominent members of the church at that time. Emma Smith was President of the Woman's Relief Society, Elizabeth Ann Whitney, the wife of Bishop Whitney,
478 was a counselor to the President, Sarah M. Cleveland was another counselor, and also Eliza R. Snow, was the other counselor, Phebe Woodruff, wife of President Wilford Woodruff. I do not know whether that certificate was true October 1, 1842, or not. I do not know anything about the facts. I do not know that there was any system of plural marriage practiced in Nauvoo up to that time. The quotation from the *Times and Seasons*, that was identified by President Wilford Woodruff, on the stand yesterday, is as follows:—

479 The Saints of the last days have witnessed the outgoings and incomings of so many apostates that nothing but truth has any effect on them. In the present instance, after the *sham* quotations of Sidney and his clique, from the Bible, Book of Mormon, and Doctrine and Covenants, to skulk off, under the "dreadful splendor" of "spiritual wifery," which is brought into the account as graciously as if the law of the land allowed a man a plurality of wives, is fiendish, and like the rest of Sidney's revelation, just because he wanted "to go to Pittsburg and live." Wo to the man or men who will thus wilfully lie to injure an innocent people! The law of the land and the rules of the church do not allow one man to have more than one wife alive at once, but if any man's wife die, he has a right to marry another, and to be sealed to both for ernity; to the living and the dead! there is no law of God or man against it. This is all the spiritual wife system that was ever tolerated in the church, and they know it.

This quotation is from the *Times and Seasons*, dated November 15, 1844, page 715, and is in the same book that was identified yesterday by President Wilford Woodruff.

I have heard of that before, but I do not recollect of ever reading it or hearing it read by our people here in Salt Lake.

That does not refer to the plural marriage system that I was taught. I never heard that the system of marriage was changed. I was never taught that by anybody of authority in the church.

I never knew the system that I was taught to be held out in the

480 church paper as a doctrine of the church at any time before the death of Joseph Smith, because it was not published as a doctrine of the church.

I never knew of it being preached from the stand or pulpit any place prior to the death of Joseph Smith; I am quite sure it was not.

I never heard it preached either privately or publicly to any number of persons before the death of Joseph Smith; the only thing that I say about it, was, that the system of plural marriage was taught to me very privately.

He and I were alone when he taught me, and I do not think it is necessary for me to tell what he said. I do not think it is necessary for me to tell anything about it at all. I do not want the mocking
481 and scoffing world to know what it was at all, and I would not tell what was said if I thought it was necessary, and I do not think it is necessary.

I never made any protest against the doctrine of polygamy, and I did not enter into any agreement not to say anything about it. I do not disclose what was said to me, because it is not my business to go around and publish to scoffers any of my private affairs, and all your efforts will be in vain, because you cannot get it out of me. Yes, sir, I took an oath this morning to tell nothing but the truth, and I will tell everything excepting that which pertains to my private
482 affairs, and I do not consider it necessary for a woman to publish her private affairs to the world. I consider that ladies are privileged in that respect.

I do not know that plural marriage is a private affair that ladies only are interested in, but I consider it as the word of God to me, and something that is to be held sacred and faithfully obeyed, and it is a private affair so far as it relates to me.

I do not know that there is a private affair that the church here in Salt Lake does not have anything to do with; I am speaking for myself and do not pretend to speak for the church.

This teaching of plural marriage or polygamy to me was a private affair, taught to me very privately, and I do not propose to tell what was said to me; do not think I could tell just what was said, in the exact language.

I would not say on oath that I could not tell; I will not say anything about it. I do not know whether I was taught anything contrary to the Book of Doctrine and Covenants or not.

Yes, sir, I recollect the statements of the members of the church there at Nauvoo, both males and females, that was read to me from page 715 of the *Times and Seasons*, about there being no such a practice tolerated in the church as plural marriage, and from the same
483 book of date October, 1844, as an editorial by Apostle John Taylor (he afterwards became the President of the church out here in Utah), it is as follows:—

For the communication of an "Old man in Israel," and the letter of Elder Addison Pratt from the islands of the Pacific Ocean, we bespeak a hearty welcome. They are genuine.

I have no certificate of my marriage with Joseph Smith; it does not matter whether I have or not; I do not believe I have; I never had a certificate.

I said a while ago that I did have, but I did not know then what you meant by certificate.

It is my business whether I received my endowments in Kirtland; that is something that I will not tell you anything about, and I do
488 not think I ought to be asked any questions whether I received endowments in Nauvoo in 1846.

I never received them before that; they were not administered before that; they did not give endowments before 1846.

493 I was the wife of one of the counselors of Brigham Young. I was present when the revelation on polygamy was presented to the church here in Utah, in 1852, the time it was presented for adoption by Brigham Young, as a part of the law of the church.

I voted on its adoption, and I have been sustaining the preaching and practicing of polygamy ever since. It has been a part of my faith. We have been talking it publicly and privately from that time up to the time of the manifesto.

You will not find out from me whether I have been sealed to anyone either for time or eternity, either publicly or privately, since I was sealed to Heber C. Kimball, that is nobody's business but my own, but I would not be very apt to marry again with the large family of children I have.

The contract when I married Mr. Kimball was that I should be his wife for time, and time only, and the contract on the part of Mr. Kimball was that he would take care of me during my lifetime, and in the resurrection would surrender me, with my children, to Joseph Smith. That is what I call marrying by proxy, and men have been crushed who have refused to do such things. That was the kind of an agreement I had with Mr. Kimball.

494 I decline to answer whether I had any children while I was sealed to Joseph Smith. I have nine children since I was married to Heber C. Kimball.

Q.--These children of Heber C. Kimball's and yours,—these nine,—you consider Joseph Smith's children?

A.—I suppose that will be all right in the resurrection and in eternity; I do not trouble myself about that.

MARY ANN WEST, of lawful age, being produced, sworn, and
495 examined on the part of the Defendants, testified as follows:—

I live in Ogden City, Utah Territory; before moving to Ogden I lived in St. Louis. I lived in Nauvoo before going to St. Louis. Ogden is in Weber county, Utah Territory. I moved to Nauvoo in 1843, April I think it was; remained there until after the death of Joseph and Hyrum Smith.

I was married to William Smith by Brigham Young; there was
496 nobody but William Smith and myself present at the time of the

marriage. I witnessed one other plural marriage to William Smith; her name was Mary Jones. Brigham Young performed that ceremony; nobody else present that I remember of. Mary Jones was married to William Smith after I was.

CROSS-EXAMINATION.

497 My name now is Mary Ann West; I was born in England, Bedfordshire, March 31, 1815; became a member of the church in 1841. I think it was James Lavender who baptized me. I heard him preach before I was baptized; he did not preach polygamy or plural marriage. No, sir, he did not. I never heard polygamy preached while I was in England. I never heard John Taylor or Brigham Young preach in England, but I heard Willard Richards; he was one of the Twelve; he did not preach polygamy; I am sure of that. Yes, sir, I am sure he never did while I was there.

I heard Orson Hyde; I never heard him preach polygamy there; I never heard of it in England at all. The first time I ever heard of it was at Nauvoo. I never heard polygamy spoken of in England. Orson Hyde presided over the vessel in which I came to this country.

I was married at this time; I was married in England to a man by the name of Sheffield, he did not treat me well, and so I left him before I came to America.

I was not divorced from him; never have been divorced from Mr. Sheffield; left him because he drank too much, and did not treat me
498 right. I left him before I started for America, a few months; cannot tell how long.

After I left him I went to my mother's, and staid there until I started for America. She lived in London.

My father came to this country ten years after I did. My eldest brother came with me; he now lives in Ogden, Utah Territory. He is a member of the Utah Church; I do not know but what he is an elder in the church now. He is quite old now, and does not attend to church affairs much. He has not been one of the Apostles in the church, but was one of the Seventy. He has been married twice; had two wives living at the same time.

I married Mr. West in 1851, here in Salt Lake. Brigham Young performed the ceremony. I was not sealed to him for time and eternity; it was for time only. I was sealed to Joseph Stratton for eternity.

Joseph Stratton was the husband I buried here in Salt Lake; I
499 married Stratton before I married West, and he died before I married West.

I married Stratton in 1846. We left St. Louis in February, and got here in September, 1847.

William B. Smith divorced himself from me. I considered he did that when he went away East. I was living in Nauvoo, but William Smith was not there at that time; he went to Philadelphia, or some place in the East. I do not know whether he was there in 1845 or not; do not know whether he was there when his brother was

killed or not; I did not know much about him then. William B. Smith and myself did not have any house there; I lived with his brother's wife, Agnes Smith; she was the wife of Don Carlos.

500 I was married to him in her house. Agnes Smith was not present at the wedding; there was nobody present but Brigham Young. I think I was married to him in the fall, 1843; I do not remember the date now.

I did not go to the funeral of the Prophet, no sir. I do not know whether William Smith was there or not.

William Smith lived with me but a very short time. I do not know if I lived with him two weeks; cannot tell you whether I lived with him one week or not. I would not say anything about how long we lived together, whether it was one day or two weeks. I will just say I lived with him, and that is all I will say about it.

501 Smith went off and left me, and that is the way I came to be sealed to the other fellow for eternity. I did not live with William Smith, because he was away all the time.

I was just married to Sheffield, not sealed to him for eternity, nor I never was sealed to Stratton; I was not sealed to him in his lifetime, I was married to him in St. Louis, but not sealed to him for eternity there; I have been sealed to Stratton for eternity, but it was since his death; and I was sealed to William Smith for eternity.

502 I want you to understand that I was not sealed to Stratton during his lifetime, but since his death I have been. C. W. West was the proxy.

Brigham Young sealed me to Smith for eternity. I do not think there will be any trouble in getting out of being sealed to Smith for eternity; I do not think Smith will ever come where I am to claim me; I do not think they will let him in where I will be.

Smith treated me very well, until he left the church and me, too. He went east somewhere; I do not know where it was, but it was east somewhere, I do not know what for. I do not know that he went down east on a mission in 1844, and staid a year or about a

503 year. I know he went east, but I do not know what for. I never heard from him while he was gone,—got no letters from him. He never wrote to me at all.

I did not have any marriage certificate. I never went by the name of Smith; I went by the name that I went to Nauvoo with.

I never went by the name of Smith in Nauvoo; he never introduced me as his wife to anybody. I never went to church with him as his wife; never went to church with him; have gone to church at the same time he did.

I never was introduced to Joseph Smith by William Smith as his wife. I was never in Joseph Smith's company along with William Smith. I never talked with Joseph Smith about polygamy but once.

I recollect it was in 1843, when I married William Smith, but I cannot say positively, for I am not sure of the time; it was not in the

winter; I cannot say whether it was in the fall or not; I cannot remember the date, so I will not say anything about it.

I do not know whether it was 1843 or 1844. I do not know the month or day of the month.

I never met William Smith but once before I married him. I met him coming from Keokuk. I think that was in April, 1843; that was before I ever saw Joseph Smith. William Smith went right away after that time.

I did not have any conversation with him at Nauvoo, not rightly,
505 I mean by that not privately. I talked with him there in the house with the rest of the folks; I never had any private conversation with him; never had any courtship with him: he was only there in Nauvoo a couple of times. When he came back to Nauvoo he brought his first wife home, and she died there.

I do not know when his first wife died. I married him after his first wife died, in Nauvoo. I was not acquainted with his first wife; I saw her once only.

506 Yes, sir, William B. Smith married Mary Jones, but I do not know when. He married her after he married me. I was living with him at the time he married Mary Jones. I lived with his sister; he was not living there. He did not stay there at all.

I said I was living with him, because I expect I was living with anyone that was living when I was living; I mean that I lived at the same age he did, but I was not living in the same house with him.

I was living in the house with his sister. I never did live in the same house with William B. Smith. He had a house there in Nauvoo.

I believe I was at his house once; I did not stay all night. His first wife was not living then, but I do not know when she died. Mary Jones was not living with him at that time.

At the time the company was at his house and I was there, there
508 was no other woman there except the housekeeper. I do not think he had married his other wife then.

William B. Smith never lived in Nauvoo hardly any time, for he was away from the place most of the time; he was scarcely in Nauvoo at all.

I do not know whether he was there from the 1st of January, 1844, or not. I do not remember; I do not know that I would have known
509 it if he had been there. I did not live in Nauvoo, with him in 1844, as his wife; I did not live in the same house with him. Mary Jones did not live with him either; I do not know who lived with him; do not know that anybody did.

He married me first, then married Mary Jones, and then a young girl by the name of Priscilla Morgridge. I did not consent to either one of the marriages; had nothing to do with him.

I was not present at the wedding of Priscilla Morgridge; the only way I know he married her I heard it, and guess he did. I do not know that he did marry her.

I think it was after Joseph Smith died that he married her. There was nothing secret at all about his marriage with Priscilla Morgridge; he brought her there and introduced her as his wife; nothing secret about that at all

510 I will not swear that William B. Smith ever told me that she was his wife. I cannot say that I ever heard him say she was his wife. I do not know who his housekeeper was; she was an elderly woman, but I do not know as I know who she was. I do not think I ever did know who she was.

511 I think William Smith's wife died before Joseph Smith died; I am not positive about it, but I think so.

I do not know whether she was dead or living when I married him; I know if she was living she was not in Nauvoo at the time. I cannot say positively, but I think she was dead.

512 I remember something about the ceremony that Brigham Young used when he married me to Mr. West, but he sealed us for time and eternity. I do not know whether that ceremony is in the Book of Doctrine and Covenants or not.

I do not remember the ceremony that was used when I married Stratton; I was married to Mr. Stratton out of the church.

I married West by proxy; yes, sir, he was a proxy for Stratton. Yes, sir, the proxy part was in the ceremony; he was to marry me for time, and after time he was to give me up to Stratton.

513 There was no proxy in the ceremony when I was married to Smith; no, sir, there was not. I never had any marriage certificate with William Smith, nor with West; never had any with my marriage to
515 Stratton. I had a marriage certificate of my marriage with Sheffield.

Yes, sir, we were all baptized after we came to Salt Lake. Brother Shirtliff came for me, and asked me to come to Salt Lake as a witness in this case, and I came. That is Louis Shirtliff, President of the Weber Stake, one of the Stakes here in Utah, of which Wilford Woodruff is the President.

517 *Q.*—I will read this revelation to you, and then ask you the question. I will read paragraphs 3 and 4, of section 132.

> Therefore prepare thy heart to receive and obey the instructions which I am about to give you; for all those who have this law revealed unto them must obey the same. For behold, I reveal unto you a new and an everlasting covenant; and if ye abide not that covenant, then are ye damned; for no one can reject this covenant, and be permitted to enter into my glory.

Now is that not the covenant you were baptized into after you came here to Salt Lake?

518 *A.*—Well, that is the revelation on plural marriage you are reading from. I do not think it was the covenant we were baptized into; I have heard of that one. I was baptized here in Utah; do not know what covenant it was, but I suppose it was the covenants of the church that we were baptized into.

They were to forsake our sins, live our religion; and such things.

I said I was baptized into the covenants of the church, and that is plural marriage you have read from. That is a covenant of the

church, yes, sir; that was not known when I was baptized first; it was only known when I was baptized last, but I do not remember of their saying anything about it.

I was not baptized during the reformation that I remember of. I think I was baptized the second time after I came to Salt Lake, but I cannot remember it positively. I think there were a good many who went the second time but I do not remember whether I did or not.

519 I do not consider it is any concern of yours what obligations I took here in Salt Lake City when I was receiving my endowments. I do not think there is anything in the ceremony of endowments about the laws of the land, or whether we should obey the laws of the land or not. I do not think there was anything of that kind.

---

527 PRISCILLA M. STAINES of lawful age, being produced, sworn, and examined on the part of the Defendants, testified as follows:—

I reside in the City of Salt Lake, Utah Territory. Before coming here I resided in St. Louis, before going to St. Louis I lived in Nauvoo, State of Illinois.

I was taught the principle of plural marriage, commonly called polygamy, in 1845. I never was present when the marriage ceremony was performed according to the principles of plural marriage but once, and that was when I was married myself to William Smith. I do not recollect that I was ever introduced by William Smith as his wife.

CROSS-EXAMINATION.

529 All the transactions to which I testified in my examination in chief occurred in 1845.

Angus M. Cannon asked me to come here and testify as a witness. Angus M. Cannon is the President of the Stake here in Salt Lake City. I was just requested to come here to meet Mr. Hall. I did not consider that I knew much, but I was told to come up here, and I came up at the request of Angus M. Cannon.

---

530 CYRUS H. WHELOCK, of lawful age, being produced, sworn, and examined on the part of the Defendants, testified as follows:—

I live at Mt. Pleasant, San Pete township, Utah Territory. Before I came to this Territory I lived in Hancock county, Illinois, at Nauvoo. I moved to Nauvoo in 1841; I left there in 1846. I was a member of the church at that time.

I was this much acquainted with the paper called the Nauvoo *Expositor*, I saw and handled copies of it. I can see the title of this newspaper dated June 2, 1844, published at Nauvoo, Illinois. I never saw any other copy of the *Expositor* except this one. I heard something about plural marriage, commonly called polygamy, in Illinois, prior to the death of Joseph Smith.

CROSS-EXAMINATION.

540 I never heard Joseph Smith teach the practice of polygamy from

the stand; never heard any elder of the church preach it publicly from the stand in Nauvoo, until after the death of Joseph Smith.

After Joseph Smith was dead I heard polygamy preached from the pulpit publicly in Nauvoo, by William Smith. He stated a great many things; undertook to prove that polygamy was right, and that that order of marriage would be restored, and he preached so many
542 strange things there to the people that Elder John Taylor got up and corrected him.

John Taylor said that he had no authority to preach or teach such a thing, even if it was true, and said that it was unjust to his brother to be teaching it, and he was the only man I ever heard preach it in Nauvoo. William Smith said there in the ceremony in 1844 that I referred to, that it was the right of a man to have more wives than one when it was not the right, for it was forbidden.

Yes, sir, it was forbidden, and William Smith was cut off from the
543 church because he preached that. That was in the winter of 1844, and it was Brother Young who put the question at the time William Smith was cut off from the church. I think he was tried by the Twelve, but it went before the whole church after that.

William Smith was present; he made a defense before he went before the church. They did not cut him off for practicing polygamy; they cut him off for teaching false doctrines. He was cut off for teaching false doctrines; he taught that any man had a right to as many wives as he could sustain. That was what he was cut off for, and because he commenced to practice it, too. That was in 1844 and 1845, after the death of Joseph Smith.

I united with the church the 1st day of September, 1839, in Pike county, Missouri. I went from there to Nauvoo, and from the time
544 I united with the church in 1839 I never heard anything about a doctrine of the church with reference to having more wives than one; I did not hear anything about that doctrine.

At the time I became a member I knew the section on marriage that was in the Book of Doctrine and Covenants. At that time it is a fact that that section on marriage in the Book of Doctrine and Covenants did not permit a man to have more wives than one. It says that one man shall have but one wife, and one woman shall have but one husband; that is what it says, and you can interpret it for yourself.

I did not know at the time I became a member of the church anything about having more wives than one; there was nothing said about the marriage question. Of course I understood the laws of the church at that time to be the laws laid down in the Book of Doctrine and Covenants, and I understood there might be additions made to it according as the Lord would see fit to reveal himself to the church
545 through the prophet. Paragraph 4 of section 101, page 251 of Exhibit E, is as follows:—

All legal contracts of marriage made before a person is baptized into this church, should be held sacred and fulfilled. Inasmuch as this church of Christ

has been reproached with the crime of fornication, and polygamy: we declare that we believe, that one man should have one wife; and one woman, but one husband, except in case of death, when either is at liberty to marry again. It is not right to persuade a woman to be baptized contrary to the will of her husband, neither is it lawful to influence her to leave her husband. All children are bound by law to obey their parents; and to influence them to embrace any religious faith, or be baptized, or leave their parents without their consent, is unlawful and unjust. We believe that all persons who exercise control over their fellow beings, and prevent them from embracing the truth, will have to answer for that sin.

The law of the church when I became a member did not teach polygamy. It was that one man should have but one wife, and one woman but one husband.

After that there was a law of celestial marriage, which permitted a man to be sealed to his wife that was living and to his wife that was dead; that was all there was to that.

The first time I ever saw the revelation on polygamy was when it was published in the Book of Doctrine and Covenants in 1876.

I told you in the beginning that I could not say that the revelation I referred to in my examination in chief as having heard read in Montrose, Iowa, before the death of Joseph Smith was the same as the revelation in the Book of Doctrine and Covenants of the Utah Church.

546 I do not remember anything about the number of pages of the manuscript I heard read in Montrose, Iowa. I never saw the inside of that manuscript of the revelation that was read to me at Montrose, Iowa. I do not know whether the revelation consisted of only one page of manuscript; I do not know how many there were, I think there was more than one, but I do not say positively; I do not know what was in it.

I was taught in that document that a man could be sealed to his wife that was living, and to his wife that was dead; of course that is what it taught.

The way I understood it from the certificates I heard read here to-day from the *Times and Seasons*, it did not refer to the doctrine of plural marriage, but only referred to the doctrine as taught by John C. Bennett. I do not understand that it referred to plural marriage.

547 Anybody was liable to be excommunicated or disfellowshipped from the church who attempted to teach the doctrine of plural marriage at that time, up to the death of Joseph Smith. I know that if I had taught it I would be liable to be excommunicated mighty quick.

I know the certificate signed by the members of the church that you have just read from the *Times and Seasons;* it is as follows:—

We, the undersigned members of the Church of Jesus Christ of Latter Day Saints, and residents of the city of Nauvoo, persons of families, do hereby certify and declare that we know of no other rule or system of marriage, than the one published from the Book of Doctrine and Covenants, and we give this certificate to show that the John C. Bennett "secret wife system," is a creature of his own make, as we know of no such society in this place, nor never did.

There was no plurality of wives revelation about that, and I believe that stated there is the truth, because there was no other

548 system of marriage at that time but what was in the Book of Doctrine and Covenants. I recollect reading the law of the church on marriage that was published in the paper that this certificate was in, and I know the law on marriage as it was published in the Book of Doctrine and Covenants; it was printed in the same paper and on the same page. I never heard of the ceremony of plural marriage performed in Nauvoo before the death of Joseph Smith. I recognize the certificate read from the *Times and Seasons* signed by Emma Smith and about thirty other prominent ladies in the church. Yes, sir, that certificate says that there was no other system of marriage practiced save the one taught in the Book of Doctrine and Covenants, and I do not know of any other excepting where a man wanted to be married by a magistrate or other minister. I do not know of any other system of marriage that was taught or practiced in the church except that taught in the Book of Doctrine and Covenants, Exhibit E, in this case.

549 Yes, sir, I heard Joseph Smith denounce the John C. Bennett secret wife system in a public sermon, think it was in 1844; could not be sure as to the dates, but I think so. I was at the meeting and heard it, but the date is something I do not remember.

I do not remember about Joseph Smith and Hyrum Smith cutting a man off from the church for preaching polygamy; I do not remember about the account being published in the church paper, but it seems to me that I heard something about it, but I do not remember how it was.

I have not the slightest doubt but what they did; it seems to me that I recollect something about it now, but I cannot recollect just how it was.

Joseph Smith said in 1844, when he was denouncing the John C. Bennett secret wife system, that there was no such a system, as that introduced or practiced by John C. Bennett, taught or practiced in the church, and that the teaching and practicing of it would take people who practiced it to hell. He said a good many things, but I cannot recollect everything now.

I identify this book as the *Times and Seasons*. The article published the 15th of November, 1844, in this book, reads as follows:—

The Saints of the last days have witnessed the outgoings and the incomings of so many apostates that nothing but truth has any effect upon them. In the present instance, after the *sham* quotations of Sidney and his clique, from the Bible, Book of Mormon, and Doctrine and Covenants, to skulk off, under the "dreadful splendor" of "spiritual wifery," which is brought into the account as graciously as if the law of the land allowed a man a plurality of wives, is fiendish, and like the rest of Sidney's revelation, just because he wanted "to go to Pittsburg and live." Wo to the man or men who will thus wilfully lie to injure an innocent people! The law of the land and the rules of the church do not allow one man to have more than one wife alive at once, but if any man's wife die, he has a right to marry another, and to be sealed to both for eternity; to the living and the dead! there is no law of God or man against it! This is all the spiritual wife system that ever was tolerated in the church, and they know it.

I recollect reading that when it was published; I think I do. That

article states the law of the church as it was taught at the time of
550 that publication. That was what was taught as the law of the church. I do not know what was taught secretly, but I know if I had taught anything else I would have been cut off. I would have been cut off because the church did not accept any other doctrine.

The doctrine of plural marriage or polygamy had not at that time been adopted as a doctrine of the church at all.

John Taylor was one of the Twelve Apostles in 1844, in Nauvoo, and was the editor of the *Times and Seasons*, on the 15th day of November, 1844, the date of the issue in which was published the following extract:—

For the communication of an "Old man of Israel," and the letter of Elder Addison Pratt from the islands of the Pacific Ocean, we bespeak a hearty welcome. They are genuine.

There was no such a doctrine at that time as the plural wife doctrine accepted by the church; at least it had not that I know anything about.

I know that it has been accepted since that time.

551 The first time that I received authority to preach it publicly was in 1852. Yes, sir, that was the first time I received authority to teach it publicly, and I have been teaching it most of the time since. I taught it until the law forbade it, and then I stopped.

I did it until it was pronounced unlawful by the United States Supreme Court, and afterwards in common with the rest of the church in conference assembled we adopted the Manifesto of President Woodruff.

The revelation on plural marriage was the law of God to a certain extent. I did not teach it as the law of God any further than I taught it as a revelation from God; that was to be applied when it was proper, and there was a man prepared to receive it from a proper authority. I never saw the man in my life that I thought it was proper to go and get him a wife; I have taught them that I believed in it, and showed them my reasons for believing in it, but I have not taught men that they were under obligations to practice it at all. I believe it to be just as it was written and given to Joseph Smith.

There is no doubt in my mind but that it was just what it purported to be. This revelation does not teach that a man cannot be exalted in the celestial kingdom unless he has more wives than one. I undertake to say that it does not teach that, exactly, in language nor in substance.

Section 132, of Defendant's Exhibit A, is a revelation on plural marriage adopted by the church of which Brigham Young was the
552 President in Salt Lake City, in 1852, and that was the revelation I was permitted to preach after that time.

I do not know that there was anything particular about it, but I was after that permitted to make known the contents of the revelation to the church, you know, in my travels to the various branches of the church with which I came in contact.

I had known of this thing for years before, but of course I had not been permitted to preach it to the church until that time when formal permission was given me to do so.

I did not teach it or preach it, simply because we were not authorized to do so in England, or anywhere else, until formal permission was given to do so; and if we had done it we would have been cut off from the church for doing it.

I do not know that it had ever been published before 1852; it might have been, but I do not think it was. I never saw it published before that time, and I am quite sure it had never been published before that time.

558 Section 132, of Defendant's Exhibit A, is the revelation on plural marriage, commonly called polygamy, that was presented to the church in Utah, by Brigham Young, in 1852. That revelation reveals a new and everlasting covenant; that reveals a covenant that we did not have in the old church, and it was not printed in the old Book of Doctrine and Covenants.

The old section on marriage that was in the 1835, 1845, 1846, and 1852 editions of the Book of Doctrine and Covenants is not in Defendant's Exhibit A, and the so-called polygamy revelation is in Defendant's Exhibit A, in place of the original section on marriage.

I do not know why the original was eliminated, and the revelation on polygamy substituted in place of it; I was not here at the time, and therefore do not know anything about it.

559 I do not understand the fact to be that they contradict each other, because there is more in one than in the other. The one is simply more comprehensive than the other, but I do not see that they contradict each other.

The one is simply an expression of the church, more in the nature of a resolution expressing the position of the church, while the other is a revelation which of course has a greater authority, but it does not follow that they are contradictory of each other.

Section 101, of Exhibit E, is as follows:—

560 Inasmuch as this Church of Christ has been reproached with the crime of fornication, and polygamy: we declare that we believe, that one man should have one wife; and one woman, but one husband, except in case of death, when either is at liberty to marry again.

That was the position of the church at that time.

I do not acknowledge that polygamy has anything to do with that revelation on receiving celestial marriage, for polygamy is a principle in which both sexes can indulge; that is to say, polygamy and celestial marriage are entirely different; that is what Joseph Smith taught us.

I never to my knowledge saw only one copy of the *Nauvoo Expositor*. I saw that at William Law's house. I do not think there was 562 ever but one copy of it published,—one number of it. I do not recollect of seeing any other number, and I am quite sure there never was any other copy published. I think its existence began

and ended with the first copy. It just run one week. I never saw but volume 1, number 1.

---

563 SAMUEL W. RICHARDS, of lawful age, being produced, sworn, and examined on the part of the Defendants, testified as follows:—

I live at the present time in Salt Lake City, Salt Lake county, Utah Territory. Before coming to Utah Territory I lived at Nauvoo, Illinois. I left Nauvoo in the spring or summer of 1846. I went to Nauvoo in 1842; staid there until the summer of 1846.

564 I do not know anything about the principles of plural marriage, or what is commonly called polygamy, before the death of Joseph Smith, only what was reported to me by other persons. I do not know anything about it.

Joseph Smith was the President of the Church during the time I lived at Nauvoo, until the 27th of June, 1844. I was acquainted with the paper called the *Times and Seasons*, published at Nauvoo.

As I understand it, John C. Bennett and others taught simply the 565 system of polygamy, and practiced it also to a pretty liberal extent, while the principles taught by the Mormon Church did not embrace the principle of polygamy, as it gives the wife the same right to several husbands, as it gives the husband the right to several wives. 566 Bennett's system was entirely opposed to the practices of celestial marriage. The principle of plural marriage allows a man to have more wives than one at the same time, and the old law of Moses did also.

I do not know whether there was a second edition to the Book of Doctrine and Covenants in Nauvoo, or not; I published one in 1852. I do not know the exact date with reference to the building of the 567 Temple at Nauvoo; I helped build it with nearly three years labor, and the Temple was dedicated, consecrated, and occupied for the purpose for which it was built.

CROSS-EXAMINATION.

At the time of the death of Joseph Smith they held meetings at the church; that is, immediately before the day of his death, but not on that day, I do not mean. They were held mostly in the grove at that time. The Temple was not completed at that time; it was partially built, but not completed.

The baptisms I spoke of in my direct examination occurred after his death.

Joseph Smith did not teach me polygamy, no, sir. I did not hear anybody teach it or preach it during his lifetime, either from the 568 pulpit or stand. I never heard it preached or taught from the stand or from the pulpit by anybody. I heard it talked about.

I think there was a publication of the Book of Doctrine and Covenants in 1842, and another in 1845; when the question was asked me before I did not recollect it.

I recollect now that John Taylor issued an edition of that book in

1845, but I do not know whether the revelation on polygamy was in it or not. I do not know that it was in it; I rather think it was not in it.

I published an edition of the Book of Doctrine and Covenants in England, in 1852. The publication of the edition was not until the first of the year 1853; that is what is called the Liverpool edition; that was the first time the revelation on polygamy was published in England.

No, sir, I do not think the revelation on polygamy was in the Book of Doctrine and Covenants published by me in England, in 1852. I cannot say whether the first publication of that revelation was made in 1876. If I could see the book I could tell. I do not
569 have any recollection of seeing it published in the Book of Doctrine and Covenants until the 1876 edition.

Section 101, of Exhibit E, being a section on marriage, was published by me in the 1853 edition of the Book of Doctrine and Covenants; the very same section, and that remained in the Book of Doctrine and Covenants until the issue of 1876.

I cannot tell why that section was eliminated from the Book of Doctrine and Covenants.

There was a time between 1842 and 1844, in Nauvoo, Illinois, when baptism for the dead were discontinued; that is, it was suspended for some time; I cannot give you the dates.

REDIRECT EXAMINATION.

I was connected with the work of building the Temple nearly three years. There was no font for the baptisms in the Temple when I first went there; that was built after I went there. It was built of hewed stone, standing on a representation of oxen. I commenced to work on the Temple in 1843. I was present at some of the council meetings of the church at Nauvoo, during the lifetime of Joseph Smith.

RECROSS-EXAMINATION.

570 I was in Nauvoo in 1844. I have read in the *Times and Seasons* published November 15, 1844, quite a number of times, the editorial of John Taylor, as follows:—

> The Saints of the last days have witnessed the outgoings and incomings of so many apostates that nothing but truth has any effect upon them. In the present instance, after the *sham* quotations of Sidney and his clique, from the Bible, Book of Mormon, and Doctrine and Covenants, to skulk off, under the "dreadful splendor" of "spiritual wifery," which is brought into the account as graciously as if the law of the land allowed a man a plurality of wives, is fiendish, and like the rest of Sidney's revelation, just because he wanted "to go to Pittsburg and live." Wo to the man or men who will thus wilfully lie to injure an innocent people! The law of the land and the rules of the church do not allow one man to have more than one wife alive at once, but if any man's wife die, he has a right to marry another, and to be sealed to both for eternity; to the living and the dead! there is no law of God or man against it! This is all the spiritual wife system that ever was tolerated in the church, and they know it.

But whether I read it just at the time, I cannot say; it is very likely that I did, but I cannot recollect it now. I recognize the

editorial comment published in that same number reading as follows:—

For the communication of an "Old man of Israel," and the letter of Elder Addison Pratt from the islands of the Pacific Ocean, we bespeak a hearty welcome. They are genuine.

The editorial comment is by the editor, John Taylor. There was no other system of marriage known to the church at that time to my knowledge, except that stated in the article published in the *Times and Seasons*, November 15, 1844.

571 There was no other system of marriage known at that time,—no other system was known or had become a rule. I mean that the practice of plural marriage had not been communicated to the church at that time.

REDIRECT EXAMINATION.

There was a system of sealing practiced by the church there, but that was practiced after the Temple was built. I do not know that there was any system of sealing prior to June 27, 1844; I never heard of it.

RECROSS-EXAMINATION.

572 Yes, sir, I knew all the time I was there in Nauvoo, from 1842 down to the death of Joseph Smith in 1844, that there was no other system of marriage taught or practiced by the church than that of monogamy. The system of plural marriage was not practiced by the church, and did not become a law of the church until afterwards; the church as a church did not know anything about it. There was no system of sealing known or practiced by the church up to the time of the death of Joseph Smith. There was no system of sealing practiced by the church before the death of Joseph Smith.

I heard Joseph Smith teach the Quorum of Twelve (perhaps not a full quorum) the principles of sealing. I never heard him teach it publicly, nor to any considerable number of people. He called it the order of celestial marriage, sealing a man to his wife for eternity.

573 I never heard the principle of sealing taught that a man could be sealed to another man's wife for eternity; I never heard him teach that another man's wife could be sealed to him for eternity. I never heard him teach either publicly or privately that a man could live with two women in this life as his wives at the same time; never heard him teach that.

The Bible, Book of Mormon, and the Book of Doctrine and Covenants contained the law of the church in 1844, at the time of the death of Joseph Smith. These were the only books that had been accepted by the church as containing the doctrine and teachings of the church. There was another publication, the *Times and Seasons*,

575 that was accepted as the paper of the church, but the doctrine, teachings, and tenets of the church were to be found in the Bible, the Book of Mormon, and the Book of Doctrine and Covenants.

I do not understand that revelations could be received and the

church bound by them before they were presented to the church; do not understand that the church would be bound by them before it understood anything about them, no, sir. I do not consider that they would be binding upon the church, only so far as they were made known and adopted by the church; they would have to be presented to the church and adopted by the church before they would become a law to the church.

The church had a right to reject any revelation it wanted to; not only the church, but any member of the church, or the whole body of the church, if they chose to do so. All men, yourself included, have a perfect right to reject the truth; if they do so, however, they would be held accountable for doing it, but they have a right to do it.

576 The members of the church were taught in the revelations that everything must be done by common consent of the church, and in the church everything that was done was by common consent. And the revelation would not be binding as a law of the church before it had been accepted by the church; of course members could accept it if they wished to, and could act upon it; that would not bind the church, but simply the actions of certain members, but it would not be binding upon the church, or be a law or rule of action to the church until it was accepted by the church.

JASON W. BRIGGS, of lawful age, being produced, sworn, and examined on the part of the Defendants, testified as follows:—

577 I live in the town of Harris, in the State of Colorado. Before coming here I lived in Pottawattamie county, Iowa. I lived there two years ago, but I lived there several years before that. My family left there before I did. Before I went to Iowa I went to Wisconsin. I lived in a number of places in Wisconsin. In 1859 I lived at Lafayette, Wisconsin; after I left Lafayette I lived in Green county, and before

578 that I lived in Rock county, at Beloit. I lived at Beloit from 1842 until 1854, principally. I was away about two years, but only transiently.

I was a member of the church while I was living at Beloit; I was a member of the church of Latter Day Saints when I went to that region of the country. That was not the full name of the church, it was the Church of Jesus Christ of Latter Day Saints. I first became a member of that church in 1841, in June.

The family record shows that I will be seventy-two the last day of this month; that would make it that I was born in 1820. I was about twenty-one years old when I joined the church; I held an office in the Church of Jesus Christ of Latter Day Saints; I was ordained an elder in 1842.

Yes, sir, I was familiar with the doctrines when I was ordained. The leading principles of the church at that time, what I was called

579 on to preach, and what I knew at that time were what was called first principles, faith, repentance, baptism for the remission of sins,

the laying on of hands for the gift of the Holy Ghost; that is what we called the first principles of the doctrine, and that is what I taught at first. Of course there were other doctrines, and a great many of them taught aside from the first principles, such as the gathering together, building up of cities and temples, and so on. Well, as I say, I do not understand the real sense of that question, but of course there were a great many things taught as matters of faith, such as the regathering of the Jews and the rebuilding of the temple at Jerusalem, and the second coming of Christ, and all that, —all these were taught that I mentioned. I do not know but there may have been others. The doctrine of baptism was taught,—baptism for the remission of sins.

580 Yes, sir, I visited Nauvoo in 1843. While I was in Nauvoo I heard nothing different in the public teachings from what I have stated; that is, I heard nothing different from what I have already stated as being the teachings of the church.

I always understood that the standard books of the church were the Bible, Book of Mormon, and the Book of Doctrine and Covenants; these were the standard books in the church from 1842 to June 27, 1844. I mean when I refer to the Bible, the common Bible, the King James' Translation, and I mean the first Book of Doctrine and Covenants that I ever saw, the edition of 1835.

The officers in the church from 1842 to June 27, 1844, it was understood, that there was the Prophet and his counselors, constituting the First Presidency; the apostles, high priests, seventies, elders, priests, teachers, deacons, bishops, and patriarch, clerks and recorders.

While I was living at Beloit, Wisconsin, I preached, baptized, and
581 confirmed; there was a branch of the church raised up there, partly through my efforts; that was in 1842 and 1843. I cannot say whether it was organized in 1842 or in the beginning of 1843. It was a branch of the Church of Jesus Christ of Latter Day Saints.

The church was located in Nauvoo; that was the chief headquarters, but the headquarters of the branch were in the town of Beloit, Wisconsin. The headquarters of the whole church was at Nauvoo, because that was where the chief officers were located. The chief officers of the whole church were at Nauvoo, and that was its headquarters.

The branch of the church that I assisted in organizing at Beloit, took exception to the rule of Brigham Young and his Quorum of the church, and we cut loose from them. That was not done right away, but in a year or two, and we ceased to be in fellowship with the church as lead by Brigham Young and his coadjutors. It was probably in 1845 or in 1846, or somewhere along there, that we ceased to be in fellowship with them. I was an elder in Beloit. After the branch was organized I was chosen presiding elder in the branch. There were perhaps twenty-five members in the branch. The branch as a body separated from the church in Nauvoo. There were

other officers in that branch; there were teachers and a priest. I was the presiding elder of that branch from the time it was organized down to 1850.

After we cut loose from the leadership of Brigham Young, we
582 accepted the leadership of James J. Strang, and remained in fellowship nominally with James J. Strang until about 1850, but only nominally; we were more or less dissatisfied with the condition of affairs, but did not take steps to leave it entirely until about 1850, and then we did leave Strang entirely.

I do not recollect the exact date that we left Strang, but it was sometime in 1850; no, I will correct that answer; it was before 1850 that we left Strang, it was the latter part of 1849.

My reasons for leaving Strang were that I saw something better in the matter of faith and leadership,—I should say in the form of leadership and faith. Then there were some of the doctrines of Strang that did not suit me, and some other things that I considered objectionable.

583 After we left Strang, myself and most of the branch at Beloit, became associated with William Smith's organization. It was William Smith, brother of Joseph Smith, Junior, the Prophet. We became connected with the faction that acknowledged him as its leader.

We became associated with that faction, as guardian for the seed of Joseph Smith, as presiding authority until the seed of Joseph should claim that right and priority which belonged to them. Now that is an answer to the question, I believe. William Smith taught it in that light. Yes, sir, he taught it in the beginning, but he did not continue to teach it in that light; he subsequently claimed it as his
584 own right. I became associated with the William Smith leadership about the first of the year 1851, and continued with him until the next fall. I was with him a little less than a year. My reasons for leaving him were very similiar to my reasons for leaving Strang. I got to believe and the branch there got to believe, that he was teaching errors. He claimed subsequent to my first acquaintance with him that it was his right to preside over the church, instead of his standing as a guardian or representative of the rightful heir; and another doctrine was that of polygamy which we considered false and refused to accept.

We had a record of the Beloit branch, we certainly did. I think I have the record now, and yet I am not positive; my books and papers have become scattered in my travels, but I think I have it yet; I know I had it not long ago. I was the president of the Beloit
585 branch during the time I was connected with William Smith, and continued to be the president of the branch as long as there was a branch. I do not remember of there being any presiding elder there after that; I was the first and the last, that is my memory now. I know there was none before me, because I organized it, and I think there was none who came after me.

After I became separated from William Smith, we called a conference to meet in the June following November, 1851; that would be in June, 1852, and at that conference the ground was taken that the proper authority in the church, the deserving authority in the church, were the sons of Joseph Smith; that was the action the conference took. It decided that the proper authority in the church were the sons of Joseph Smith.

I can remember some of the persons who took part at that conference, and some I cannot. There was Samuel Powers, Zenas H. Gurley, Albert White, S. H. Briggs, John Harrington, David Powell, and a good many others whose names I cannot recall. There were other branches represented at that conference, certainly
586 there was; there was the Waukeshaw branch, it was lead by White, the Yellowstone branch was represented by Zenas H. Gurley.

I am acquainted with the history of the Waukeshaw branch; raised up that branch, consequently I am familiar with its history. It was organized in 1842 or 1843. The Waukeshaw branch to some extent followed both Strang and Smith.

I was acquainted with Zenas H. Gurley; he was a member of the church presided over by Strang. I should say that Gurley was a member of the organization presided over by Strang, but I have no knowledge on that subject. I understood that Gurley was the presiding elder of that branch at one time. He attended the conference at which the reorganization was effected, as from the Yellowstone branch, and represented that branch. I think there were two or three other branches represented at that conference, yet I do not remember by whom they were represented.

There were quite a number of elders and members there, but just how many I could not say. There was no action taken at that
588 conference looking towards the reorganization, further than to adopt resolutions declaring our rejection of the different leaders, and stating that we stood in the expectation of one of the sons of Joseph Smith assuming the leadership of the church at some time in the future, and that is the position the church would stand, accepting the leadership of no one.

There were no steps taken looking towards the disciplining of
589 members of the church who had been teaching false doctrines, and from which we had withdrawn; we simply disfellowshipped all those different leaders, and went it ourselves, until the sons of Joseph Smith or one of them should accept the leadership of the church. We declared that we would not follow any of these would-be leaders any further; we just declared ourselves freed from them, that is all. The fact is, we just simply withdrew from them; that is all there is to it.

I was not acquainted with the branch presided over by Harvey Green; there may have been some of that branch who took part in the conference of 1852; I do not recollect about that. That confer-
590 ence of 1852 was called upon the authority of mutual advice and

counsel of Zenas H. Gurley, Henry Deam, William Powell, and myself. The conference of 1852, held at Beloit, adjourned to meet in October following, at what was known as the "Yellowstone" branch.

At that conference there was nothing done looking towards effecting a reorganization of the church, further than to determine some general principles in regard to authority.

We had legal authority to minister in these things, and decide what we should do, of course, as set forth in the books of doctrine and authority. We had authority to preach and teach the doctrine of the church, and the decision of that conference in regard to legal authority was substantially that those who had been legally ordained in the church should be recognized, and the highest of those should act as presiding authority for the time being.

591 The point was raised at that conference, and substantially decided, as I understood it, that James J. Strang and William Smith could ordain certain officers, could ordain elders, priests, and teachers. We derived that authority from the laws laid down in the books of authority in the church.

Ordinations by James J. Strang and William Smith to the office of seventies, high priests, apostles, or patriarchs, were not accepted. The ordinations by any parties to those offices, with one single exception were not accepted, the office excepted was high priest.

We claimed at the time of the holding of these conferences in 1852 or 1853, that we belonged to the Church of Jesus Christ of Latter Day Saints; we claimed to be a part and parcel of the church. We held the next conference April 6, 1853. At that conference there were steps taken towards reorganizing the church or effecting a new organization of the church; there were seven of the Quorum of Twelve chosen and ordained; there were also some High Priests and some Seventies chosen.

I would say that the choosing and ordaining these members of the Twelve, High Priests, and Seventies was partly by virtue of a revelation, and partly by action of the conference.

592 That particular revelation that is referred to in that last answer was given to Henry Deam; he acted as counselor at that conference with others who held priesthood. I do not think there was any printing authorized to be done at that conference, still I would not say there was not. I know there was printing authorized at some of the conferences, but I do not know whether it was that one or not.

593 I recollect the paper marked Exhibit 10, entitled "A word of consolation to the scattered Saints." I had something to do with the preparation of that pamphlet; it was written by the advice of the conference of 1852; that conference authorized the preparation of a pamphlet, and appointed a committee to do it, and I was one of that committee. The conference authorized the publication of a pamphlet, and the committee in preparing it was not confined to any particular number of pages, or to any particular space.

Now that is the history of that pamphlet up to the time it was submitted. The committee reported the pamphlet to the conference after its preparation as the result of their work; it was presented in manuscript form. I do not remember distinctly what was done by the conference.

594 I apprehend that the pamphlet itself will give you more correct information on what was done than I can.

The last three pages of the pamphlet were written and prepared after the rest of it had been accepted by the conference; I think that is correct. I have said all that I have to say in regard to the printing and preparation of the last three pages, and whether it was done by the authority of a revelation is something that you can conclude as well as I can.

I cannot say that there was any other action taken by the conference, there was not that I am aware of. I was one of the seven men
596 who were ordained apostles at the conference at which the reorganization of the church took place, to which I have referred; and I continued to act in that office from that time till 1885. The others who were ordained apostles at that conference, were Zenas H. Gurley, Henry Deam, George White, Daniel Razey, John Cunningham, and Reuben Newkirk. I am not aware that Henry Deam became disaffected from the church at that time; if he did I did not know it. He did after that at a subsequent time; a couple of years after that, perhaps, he became disaffected; do not know just when it was, but I think it was a couple of years after that, and then he left the church.

There were some of the Quorum of Twelve that were ordained at that time who left the church, and there were some added prior to 1860. I mean what I say, that there were some left the quorum, and others were added from time to time, for the Quorum was kept up to that number all the way through, till 1860; there were two or three left, and there were others added in their places.

That movement or conference was known as a conference of the Church of Jesus Christ of Latter Day Saints. I do not know that the name *reorganized*, appeared in any of the works of the church at
597 that time; that is, in its publications; if it did, I do not remember of it. I do not think the name of the Reorganized Church of Jesus Christ of Latter Day Saints was known at that time, but it was known by that name subsequently. It was not known by that name until 1860, according to my recollection of it.

I never heard it so termed, nor was it considered by that conference of the church in 1852 or 1853, that it was a new organization of the church. I did not so understand it myself; never heard anyone else term it so; nor *reorganization;* I do not think that word was used.

I was continually in connection with the rest of the church from 1852 down to 1885, and I may say that I was fairly well acquainted with its doctrine. The doctrine of baptism for the dead has never been practiced in the Reorganized Church to my knowledge.

It has not been taught as a present duty, and it has not been practiced. The doctrine of the gathering as taught in the old church has been taught all through, more or less. I know the different offices there are in the Reorganized Church of Jesus Christ of Latter Day Saints up to 1885. There never has been a full Quorum of Twelve Apostles, and there is not now as I understand it; never has been a patriarch. I suppose I am acquainted with the books that were accepted by the Reorganized Church of Jesus Christ of Latter Day Saints as authority in the church; I expect I am.

598 The Bible, Book of Mormon, and the Book of Doctrine and Covenants; they are the standards in that church; they were accepted as the rules of authority in the Reorganized Church of Jesus Christ of Latter Day Saints when I was in it, and are yet, I believe. I am not aware that the Church has accepted any others at any time. I am acquainted with the Holy Scriptures, published by the Reorganized Church, and I have read it.

Page 295, of Exhibit 3, being the *Saints' Herald*, published October 1, 1878, reads as follows:—

Resolved that this body representing the Reorganized Church of Jesus Christ of Latter Day Saints, does hereby authoritatively indorse the Holy Scriptures as revised, corrected, and translated by the spirit of revelation, by Joseph Smith, Junior, the Seer, and as published by the church we represent.

I have seen that resolution before. I attended the conference of the Church of Jesus Christ of Latter Day Saints in 1857, at Blanchardville, Wisconsin.

599 I do not think it has been an invariable rule that revelations given through the President of the Church had to be submitted to the Quorum of Twelve and the other quorums before they were submitted to the Church. Some of them have been submitted to the Quorum of Twelve, and some of them have not been. Yes, sir, there was a paper published before the death of Joseph Smith, the *Times and Seasons*, that was understood to be the church paper; I was in the habit of reading it regularly at that time. I might identify portions of, or extracts from that publication by hearing it read, and I might not. Yes, sir, I heard something about a revelation on polygamy or plural marriage when I was in Nauvoo, in 1842;
602 I heard there was one; there was talk going on about it at that time, and continued to be, but it was not called plural marriage; it was called "sealing." You ask me what I understood this sealing to be at the time this talk was going on. What I understood it to be, was, sealing a woman to a man to be his wife, to be his wife hereafter, his wife in the spirit world. I was told by members of the church that there was such a revelation on sealing. I am not a member of any church at the present time. I have no interest directly or indi-
603 rectly in the result of this suit. The doctrine and practices of the Reorganized Church of Jesus Christ of Latter Day Saints at the time I separated from it were the same as the doctrines and practices that I believed and accepted at the conference held in 1852 or 1853; there

were some minor things that were a little different I think, but that was not the cause of my separation from the Reorganized Church; it might have been partially.

CROSS-EXAMINATION.

604 There were no changes in the doctrines of the church that my action was based on in separating from the church; I did not say that there was any change in the doctrine of the church that influenced my action. There was nothing changed that I would consider vital at all in the doctrine.

A few weeks after I separated, I had an article published in the *Saints' Herald*, in which I stated in these words, substantially, "that had the decision of the Reorganized Church been made as made in answer to my request to withdraw from the church, there possibly would have been no occasion for my withdrawal." That is substantially what I stated.

I did not withdraw because of any change in doctrine, or because anything new was brought in, but it was in the interpretation put upon certain lines of policy and doctrine; and while others were allowed to discuss those lines of policy, I was not permitted to do so, but was shut out. I could not be heard, and consequently, as I expressed it at the time, I was gagged and bound, and did not have an opportunity to answer and express my views, as I had a right to do. That was what I objected to, and not to any change in the doctrine of the church. It was simply a matter of discussion through
605 the columns of the *Herald* that caused my withdrawal. It was through a discussion which arose, and was attempted to be carried on through the columns of the *Herald;* but while the other party was allowed access to the columns of the *Herald*, I was denied that privilege.

I do not have any recollection of attending a conference at Sandwich, Illinois, April, 1865; do not think I was there, because I have no recollection of having attended it. I generally attended the General Conferences, and I did invariably attend them for the first nine or ten years after the reorganization; but after that I did not
59 invariably attend them.

I was asked in my direct examination if I did not hear of the doctrine of polygamy, etc., and I answered that I talked with members with reference to sealing, and I understood that the doctrine of sealing was for eternity; it was sealing a man's wife to him for eternity, or wives either.

The doctrine of the original church from the time it was established up to 1844, when Joseph Smith was killed, was that one man should have one wife, and one woman one husband. It was the
606 doctrine of one wife and one husband. It was the one wife doctrine at that time. There was never any other doctrine in the original church that I knew of, and that is the way it was taught and understood; and whatever change of that doctrine, in that respect, was a change of the doctrine of the church.

I united with the church in 1841, and I remained with it. I have accounted myself a member of that church from that time on, from 1841 to 1885, but I have been in different organizations at different times, as I have already stated; but when in each of these organizations I supposed I was under the church.

When I found out that they were teaching anything that was not authorized by the church before 1844, as the law is set forth in the Bible, the Book of Mormon, and the Book of Doctrine and Covenants, why, I left it at once.

I always supposed when I belonged to these different organizations that they were the true and direct descendant of the original church, and as soon as my error was revealed to me, I left them,—left them as soon as I found out they were not under the church. These parties whom I have mentioned as having been members of the original church, under my administration in Wisconsin, and afterwards united with me under the banner of some of these other men, was not the true church, did not pretend to be the true church; but it was their belief and faith in joining these various organizations that they were representing the original church.

607 When I joined the organization as led by James J. Strang I accepted him as head of the church; that is, I accepted him as the leader and President of the Church, as the successor of Joseph Smith in the Presidency of the Church; and in accepting James J. Strang as head of the church we accepted him as being the regular, genuine successor to Joseph Smith; that is my understanding of it.

I always understood that Strang claimed to be the successor of Joseph Smith by virtue of an appointment which he had received from Joseph Smith, to be his successor.

It was through and by virtue of that letter of appointment that Strang claimed to have received (that is what I understood his claim was based upon) a letter from Joseph Smith. And as soon as myself and others who had joined his organization found out that he had been teaching other things not authorized by the church, we discarded him; yes, sir, we did.

Zenas H. Gurley, who raised up the branch at Palestine, and who I answered I thought was a member of the Strang church in my examination in chief, was an authorized minister in the Church of Jesus Christ of Latter Day Saints before the death of Joseph Smith, an elder in that church at least, and might have been one of the Seventy, but I cannot say that he was one of the Seventy or was not, still he might have been.

He was made a President of the Seventy after the death of Joseph Smith, and I think from that, that it is altogether likely that he was a Seventy before the death of Joseph Smith; still, I do not know.

He was an elder in the original church, there is no manner of question about that, and that would give him the right to organize that branch, being an elder in the original church; but whether joining with Strang invalidated that eldership is a question to be

determined, I suppose; but I will say that at the reorganization and at no time since have we understood that it invalidated an eldership in the church.

608 Gurley simply acknowledged Strang as his leader for a time, and when he found out his pretensions to be the leader of the church during his life, then Gurley rejected him and his leadership. That is the same way we looked upon and accepted the claim of William Smith. It was for a short time, and when we found out what his pretensions were, and that they were false, we repudiated him.

I did not understand at that time that my authority to build up the church was derived from William Smith or Strang. I had that authority by virtue of my eldership in the original church.

It was in 1844 the church split up into these different factions.

These people with whom I was associated in Wisconsin were people who were contending for the original doctrine of the church, for the maintenance of the original doctrine of the church, in its purity.

When I say that I withdrew from Brigham Young and others I simply mean I repudiated them; I repudiated their claims to the Presidency as false, on the grounds that they were teaching false doctrine, and something that the church did not authorize; and when I say that I withdrew, I simply mean that I repudiated them, but I refused to have anything to do with the church as represented by them; that is, by Brigham Young and his adherents.

609 And further we were claiming all the time to be the church in succession from 1830, or were following what represented the church in 1830. All the time we claimed that the church we represented was the church in succession established in 1830.

I claimed that I belonged to the original church; although we were under different leaders we claimed to belong to the original church, and as soon as we learned that any of our leaders were teaching false doctrine, we left it. That is the reason we left Strang, and Smith, because we considered they were teaching false doctrine, or doctrine that was not authorized in the original church. It did not make any difference to us, for we still considered that we were in the church, although under these different leaders.

The Reorganized Church of Jesus Christ of Latter Day Saints could not properly be called a new movement or new organization, for that would mean a new organization of the church, which this was not; at least I never considered it so, nor did the church as an organization. It always contended and believed that it was the original church in succession; that was my individual opinion, and that was the attitude of the church as an organization.

The church was simply reorganized and placed on a new footing as was necessary after the disruption, and I was one of the principal officers in it at that time. I was one of the seven chosen at that conference. None of the parties that I named in my examination in chief as being present at the time of the reading of the paper in the

priesthood lodge, ever accepted the doctrine of polygamy. No, sir, none of them that I know anything about, unless sitting there and listening to it being read could be called an acceptance of it. They
610 did not pass upon the paper, and did not accept it that I know of. It was not passed upon, and consequently there was no acceptance of it at all. I know that I did not accept it, and I do not think the rest did; at any rate they did not do so at that time. I do not mention any of the names of those men present for the purpose of showing that they accepted the doctrine of polygamy. I simply mentioned the names as being present with the rest of us. The same laws were accepted for the Reorganized Church of Jesus Christ of Latter Day Saints that were in the original church at the time of the death of Joseph Smith; that is the fact, at least we so understood it. And those laws related equally to the reorganization, as they did to the
611 original church, and if there is no patriarch nor baptism for the dead in the Reorganized Church, I suppose there is a reason for it; there must be a reason, of course. Baptism for the dead was practiced in Nauvoo, in 1844, and during the lifetime of the prophet.

Yes, sir, at the conference in 1853 there were seven set apart for the office of apostles who were ordained to that office and position under and by virtue of the authority of a revelation; that is the way they were selected and ordained. The authority for the ordination there, was the first revelation; that would be the prime authority; we understood it was, at all events.

I did not meet Granville Hedrick at that conference; it was subsequently, I cannot fix the date, but it was subsequent to that date. He was at one conference; I recollect his being at one conference, but it was not this one. My memory is that it was not at this conference. I am sure that he was at more than one. I recollect now that
612 he was at the last conference I attended that year; that was the conference at Amboy. He was at two conferences; I am not sure what he did at the conferences, whether he took part or not, but I think Granville Hedrick had something to say there at that conference, but I do not know whether he voted or not. He was never accounted a member of the local church. We passed a resolution at that conference declaring that all members of the church baptized during the lifetime of Joseph Smith, by proper authority, were members of the church, and those who were appointed elders in the original church could properly take part with us in that conference. We could not have held in any other way; all who were legally ordained to office in the original church could be members of the reorganization.

Granville Hedrick could have taken part with us, and legally also. My memory, as I have stated, is that he had something to say there, and what he had to say was simply talk indulged in at the conference. There was no disagreement on any of the fundamental principles of the church that I know of. Granville Hedrick believed in the Bible, the Book of Mormon, and the Book of Doctrine and Covenants.

I have seen the work of Granville Hedrick, entitled "The Spiritual Wife System proven false, and the true Order of Church Discipline." I have read it.

608 That work of Granville Hedrick sets out that the Book of Doctrine and Covenants, as set out during the lifetime of Joseph Smith, was
613 one of the fundamental works of the church. On page 14, of Exhibit W, being a work of Granville Hedrick, is as follows:—

> Now, then, that Zion or the church is not delivered and established in peace, neither clothed upon in righteousness; but is in disgrace by her own members, and in bondage of one another, and of the world; and divided, that is, the church, since the death of Joseph, has been rent into many divisions under different heads, or parties, being led by the cunning devices of men such as Strang, Brewster, Bishop, Banemy, Wm. Smith, and Brigham Young; in all six prominent parties, besides some other minor ones not necessary to name, thus has the church, strangely diversified and distractedly wandered since the days of Joseph. Brethren, you all remember that the Book of Doctrine and Covenants says that Joseph was called to lay the foundation of a great work. Is this the work, that great work that Joseph was called to lay the foundation of so many false doctrines; did Joseph lay the foundation of any of them?—Joseph laid but the one foundation; now there cannot be six or more doctrines, all in or on the same foundation, and all built up differently, or in different ways, and be just right. Joseph Smith was called to lay the foundation of a great work. How did he accomplish it? He translated the Book of Mormon by the gift and power of God. In it comes forth the gospel to a nation of people once on this continent described to be the descendants of Joseph of Egypt. This book then contains the gospel of Jesus Christ to the Gentiles, etc.

That was the doctrine of the Reorganized Church at that time; and
609 from the same book, Exhibit W, page 19:—

> And that the Church of Jesus Christ being established again anew, upon the foundation of the apostles and prophets, of the Son of God, on the 6th day of April, A. D. 1830, embracing the doctrine contained in the Bible, Book of Mormon, and the Book of Doctrine and Covenants for their faith and practice.
>
> These three above-named inspired volumes was received by the whole Church of Christ, as established anew again by Joseph Smith, to be the rock, and pillar, and groundwork of their faith and doctrine in Christ Jesus, in the first days and years of this the identical Church of Jesus Christ; hence we have the foundation of this Church before us, of which I profess to be a member.

Yes, sir, I stated in my examination in chief that there had not
614 been a full Quorum of Twelve. The laws of the church provide for the different grades of officers. It is not because of any disagreement between the doctrine of the Reorganized Church and the doctrine of the original church that these quorums have not been full; of course that is not the reason.

Expediency has been the governing rule or principle in that regard, as I understand it. It is simply on account of the fact that these officers are to be called in a certain way, and others have not been pointed out.

I spoke of baptism for health in my examination in chief; it was never considered a prominent feature or any doctrine of the original church, any more than it is of the Reorganized Church of Jesus Christ of Latter Day Saints. It was never considered essential in either church. It was simply taught as a doctrine that was bene-

ficial; I never heard an elder or anybody else preach it in either church. I never heard it taught as a present duty, but I have heard it advocated as beneficial, and in that sense it was practiced.

I do not know whether Zenas H. Gurley's name was ever on the records of Strang's church as a member; I do not know anything about that, personally. If it was there, I know I never authorized it to be put there.

My relationship with Strang was caused simply from the fact that that was the best light I recognized in the church. That was the reason I was with him, and as soon as I saw that he was preaching a doctrine contrary to what I knew was the true doctrine of the church, I left him at once. I thought I was mistaken, at all events, or I should not have renounced his leadership, if I had not thought I was mistaken. The same is true of my relationship with Wm. Smith; I renounced them both as soon as I found out that they were teaching doctrine contrary to the church.

It was the President of the Church of Jesus Christ of Latter Day Saints who translated the Bible; that is, the Holy Scriptures to which I referred in my examination in chief, and it is not changing the policy or doctrine of the original church for the Reorganized Church to adopt them as a standard of authority in the church. The old and original church taught that, and the Reorganized Church adopted the same teachings.

The Reorganized Church recognizes the King James' Translation
616 of the Bible; it is recognized by the church and used by its elders. There is no question about that. I stated at the outset of my examination that at the time the reorganization was effected, that we accepted the Bible, the Book of Mormon, and the Book of Doctrine and Covenants as the law for the guidance of the church, and of course the Bible that we accepted then was the King James' Translation, or what is called the King James' Translation, because we did not have any other at that time. That is what we meant by the Bible as one of our books of doctrine at the time. It has always been the privilege of the elders of the church to use any and every translation of the Bible. I have never been required to use any one translation to the exclusion of the others, and I do not know that I ever heard of anyone else who was.

The work of translating the Bible was the work of Joseph Smith and Sidney Rigdon, who were members of the original church; that is, they were members of the original church organization, and belonged to the First Presidency of the Church. Joseph Smith was the President, and Sidney Rigdon was his counselor, as I understood it.

The revelation commanding that the Bible be translated was accepted as authoritative by the original church, yes, sir, of course it was. It is the revelation in the first edition of the Book of Doctrine and Covenants, and that was accepted by the General Assembly.

When I was associated with William Smith the claim was made by

him that the seed of Joseph would eventually come forth and lead the church. There was also an element of that kind in the church,
617 amongst all the Saints that I had anything to do with. They believed that young Joseph Smith would eventually become the
60 leader of the church, and that element was the dominant element in all the different branches or factions that had representation in the
61 conference of 1852 and 1853. The members were specifically planted upon that idea; that was the dominant idea in relation to who was entitled to be the head of the church. Undoubtedly it had been the dominant idea with the members of the church from the time of the death of Joseph Smith down to 1852 or 1853.

I never heard polygamy taught from the stand or pulpit in Nauvoo, or in public at all; what I heard was from individuals in their homes, and the like. Polygamy was never named at all; it was sealing that they called it, and did not say anything about polygamy. Sealing was what I heard talked about in Nauvoo, sealing for eternity, for time and eternity also. No, sir, I did not see the revelation at that time, and was not told anything about its contents specifically, but I heard it in a general way as a rumor more than anything else. There was a rumor that there was such a revelation in existence. I never saw it at that time, nor at any time since. I never saw it at all.

618 My brother, Silas Briggs, accepted in some sense the leadership of James J. Strang; but he could not really be called a member of that organization. I did not say that Silas was a member of the Strang
60 organization, and if you have understood me to say that he was, you have misunderstood me, for I did not say that he ever united with Strang; he acted with the body that he represented, but I do not think that he ever united with that organization.

I have not stated that all of the parties who took part in that conference of 1852 had been united with some other branch of the church; if I did I did not mean to make the statement in that way, and these parties I mentioned as having taken part I simply gave them the same credit that I asked for; that is, the credit of good intentions; that is that each of them at the time believed that it was the true church, that they were joining, and that they were in the church all the time.

I cannot say, of course, as to the secret motives, but I know that in my action, I thought it was the church that I joined, else I should not have joined them. These people were simply members of the original church and were looking for the proper leader of the church. I thought I had found the true leader in Mr. Strang, and as soon as I found out that I was mistaken I repudiated Mr. Strang, and I do not understand that I left the original church when I left Mr. Strang and I never did.

REDIRECT EXAMINATION.

619 *Q.*—I will ask you to state, Mr. Briggs, at the time you left the Reorganized Church, if you found out that you had made the same

mistake with regard to young Joseph Smith being the leader of the church, as you found out about Strang and these other men?

A.—No, sir, I have already stated substantially why I withdrew from the Reorganized Church, and I do not conceive that it is necessary for me to state other reasons, for there may be other reasons besides that, but not questions or reasons involving the Presidency. That point did not figure at all when I withdrew.

622 I understand that there is a difference between a General Conference and a General Assembly; there has never been, as I understand it, a General Assembly of the Reorganized Church of Jesus Christ of Latter Day Saints; the laws of the Reorganized Church provide for calling one, whenever it is thought necessary by the body to do so. I have always understood that it was competent for the church to call a General Assembly whenever it was deemed necessary. That has always been my understanding of it.

623 The laws of the Reorganized Church of Jesus Christ of Latter Day Saints are just the same as the original church; there is no question about that; they were exactly the same. There was never a General Assembly of the original church during the time that I was a member of it from 1841 to 1844.

L. D. HICKEY, of lawful age, being produced, sworn, and examined on the part of the Defendants, testified as follows:—

I am seventy-eight years old, I reside in Branch county, Michigan, at the city of Coldwater, have lived there twenty-four years. Before going to Coldwater, I lived in Wisconsin, in La Crosse county, and in Jackson county. I lived in Wisconsin from 1856 to 1867. I went from Wisconsin to Beaver Island, at the north end of Lake Michigan.

624 I think I went to Beaver Island either in 1848 or 1849. Before going to Beaver Island I lived in Lapeer county, Michigan. I left Nauvoo in the spring of '45, and went to Wisconsin. Staid there until I went to Beaver Island. Before I went to Nauvoo, I lived in the town of Troy, in Oakland county, Michigan. I went there from York State, and lived there until I went to Nauvoo. Before I went to Nauvoo I had been a member of the Methodist Church; but when I went to Nauvoo, I belonged to the Mormon Church. I was baptized in the month of February, 1842. I was tolerably well acquainted with the church. I understand the law of the church on the question of succession; I know what the law says on that subject. I know who the

626 successor of Joseph Smith was in the Presidency of the church. I know it upon the same principle that I know Mr. Harrison is President of the United States. I know it by criticising the constitution of the church, which made regulations for a successor, and how that successor shall be appointed and ordained, and James J. Strang filled that bill. The constitution of the church makes provision for a successor just as clearly as the Constitution of the United States makes

627 provision for the succession in the Presidency of the United States,

according to my way of looking at it. The book you now hand me is the "Diamond," and it is the work of Strang published at the time he
60 claimed to be the successor of Joseph Smith. In it he sets forth his claims to be Joseph Smith's successor. I accepted Mr. Strang's claims, to be the head of the church after the death of Joseph Smith, in February, 1846, I think. Now, with reference to us Strangite people, we generally calculate to marry for life everlasting; but if a
646 man had lost his wife and wanted to have her, he would have both of them sealed to him. The one that was living would not be piggish and say he could not have the one that was dead, so he would have her sealed to him, and then have both of them. I do not know that there is anything in the simple act of sealing, so far as that goes. Strang translated the plates that he claimed were genuine and found in them the law of polygamy; and after the translation he published it, and then he indorsed the doctrine of polygamy after he was commanded to do so. The "Book of the Law," that Strang translated makes provision for sealing, for marrying and sealing.

CROSS-EXAMINATION.

647 I do not know what year I was born, I can figure it out and tell you, if you will give me time to do it. I was seventy-eight years old last February, if my parents kept the record right. I cannot tell you when I was born; I do not care when I was born; I was born sure enough, and that is all there is in it that interests me. That
60 would make me twenty-eight years old when I joined the church. It
649 was in February, I think, 1846, that I went on that glass hunting expedition, that my attention was called to in my direct examination. Dr. Lyman Stoddard was with me. I was an elder in the church at that time; was ordained in 1843. I had not been a member of the church quite a year until I was ordained an elder; the man who ordained me M. Lyrinne, he was a high priest. I began to preach right away after I was ordained an elder; my preaching was all done in the State of Michigan, up to 1844. I did not preach polygamy in 1843 or 1844 up in Michigan or Wisconsin; no, sir, I did not, because I did not have a right to do it; I was not authorized to do that. I never saw Joseph Smith. I never heard Joseph Smith, Wilford Woodruff, John Taylor, John E. Page, Lyman Wight, or any of the Twelve of the original church, prior to the 27th day of June, 1844, teach polygamy, either publicly or privately. They were the leaders of the church, these parties I have named. I saw Woodruff, and I knew Martin Harris in Palmyra, New York. I never heard James J. Strang teach polygamy before 1844, either publicly or
650 privately, anywhere. I do not know as I ever did hear him; he never taught it until after he translated the Book of the Law of the Lord; if he did I did not know anything about it. It was not part of the Strangite doctrine until after the translation of the Book of the Law of the Lord. I was a member of the Strangite Church at that time. I do not remember that they taught polygamy until the Book

of the Law of the Lord came out. I do not think the date is given in the Book when the translation was made. I could give the time the plates were found from which the translation was made. These plates from which the Book of the Law of the Lord were translated
651 by Strang were brought from Jerusalem, taken from Laban. There were other plates that came from Jerusalem also. I know that the
652 plates were brought from Jerusalem simply by hearsay, and I know the Book of the Law of the Lord was translated in the same way, from hearsay. I do not know what date it was that these plates from which the Law of the Lord was translated by Strang first came into his possession. I was not there, and do not know only what I heard about it. Strang was ordained on June 27, 1844, as he claimed, and I suppose that was the date that he got the plates, but I do not know when he actually got them; but he had them, for I know there was a steamboat came into our harbor late in the fall that year, too late to run to Chicago, and they left it there all winter in our charge, and Mr. Strang used it to translate the plates on board it. I am not sure as to the year it came up there, but it was sometime between October, 1847, and 1850. I think it was between
654 these two dates, but I would not say positively. Strang never published anything about polygamy until after he translated these
655 plates. So far as I know Mr. Strang did not know anything about polygamy before that time. Strang never believed in polygamy until that time, and when he translated the plates and found out that they taught polygamy, he threw the whole thing on the floor, and said he would not go any further with it. I said in my direct examination that Strang never believed in polygamy until after he translated the plates, and he did not believe in it then until the Lord knocked it into him by main strength and awkwardness.

It was in the year 1846, when I first went to Nauvoo, and took Mr. Stoddard on that glass expedition to get glass for the Temple at Nauvoo. That is the time that I had the conversation with Stoddard about polygamy, that I testified in my direct examination, when we were after the glass for the Temple. The first time I ever heard anything about the doctrine of polygamy was in 1846. I was out with this man Stoddard after the glass for the Temple.

Q.—Well, you testified when the question was asked you, or volunteered the information six or seven times that it was in 1846 that you went on that expedition with Stoddard.

A.—Well, I testify now that I do not care what time it was. I know I was there, and I do not care when it was. I think it was the
656 fall or winter after Joseph Smith was shot, and it was at this time that I talked these matters over with him; we talked about polygamy, plural wives, etc. My recollection is that Joseph Smith sent him up there. I say I suppose he did, do not know and dc not care who sent him. Joseph Smith was dead long before we went up there; he was killed in June, 1844. Well, I do not care a rip who sent him; I suppose he was sent by the Presidency of the Church, or whoever had

charge of the property. The church had no successor except Joseph Smith, and after him came Mr. Strang, and it has no president to this day with the same power and authority that they had; no, sir, there is no president in the church to-day in the sense that Joseph and Strang presided over the church; there has been no president after Strang by virtue of an ordination. I do not identify any president of the Church by appointment of the body of the church or any other power, except under certain restrictions. The president of the Church is not Hickey; not much it is not Hickey. From my standpoint and criticism which I have made of the successorship, the highest presiding officer that was in the church that I was baptized into was young Joseph Smith. Joseph Smith the present President of the Reorganized Church of Jesus Christ of Latter Day Saints. I do not claim that Joseph Smith is President of the Church by virtue of the appointment of the Lord; he is the President of the Church by virtue of an ordination he got under the hands of Strang, and in no other way. Now that is the way I know it to be, and you have got it right straight. The leadership of the church descended to Strang after the death of Joseph Smith, and now Joseph Smith succeeded Strang by virtue of the ordination of Strang. Yes, sir, young Joseph Smith was ordained to the same priesthood that Hyrum Smith held, but not to the priesthood that Joseph, his father, and Strang held. He holds a lower grade of priesthood than they held. I claim that Joseph Smith is the President of the Church by virtue of an ordination that James J. Strang conferred on him. He is the acting President of the Church, but does not hold all the powers that his father held; he does not hold the same grade of priesthood that his father held, or that Strang held; but at the same time he is the highest in authority that I know of in the Church of Jesus Christ of Latter Day Saints, and is in the direct line of succession to the original church. Yes, sir, Strang was President of the original Church, and he was so by virtue of an appointment from Joseph Smith.

Strang died in 1856, the 9th of July. John E. Page did not continue with him until he died; he left the church before 1856. No, sir, Rueben Miller did not continue with Strang until he died. Jason W. Briggs, and Buzzard and Stephen Post all left the organization before Strang died, also Zenas H. Gurley and William Marks.

My attention was called a while ago to page 34 of Exhibit 102, a resolution, "Moved and seconded that Z. H. Gurley be appointed to preside." I do not know whether it was Samuel H. Gurley, Z. H. Gurley, or L. H. Gurley; I will not swear it was Samuel H. Gurley; the record does not read that way; the record reads L. H. I understand that the writer intended to write Z. H. Gurley, but it seems to me that he did not know much about the way to make *Z*, or he could have made a better one than that. I do not know that I could say who wrote that record; I did not see anyone write it. I have seen the man who did the writing in book, Exhibit 102. I was acquainted

with him. I cannot say that the writing in Exhibit 102 is the writing of Mr. Hall, the clerk; it looks like it, but still I cannot be positive
664 as to that. Page 34 in Exhibit 102, I should judge from the signatures and names, H. G. Hall is signed to it; he is probably the man who wrote it. Section 111, of Exhibit J, on marriage was not the rule under Strang's administration; no, sir, we discarded that. Do you not see that? That was no revelation. There was nothing of a
671 revelation in that—do you not see? There is nothing of a revelation in the belief of Strang unless it includes at least two women for one man; we want more; of course it depended somewhat on what kind of a man it was. I was taught and practiced polygamy under Strang; it was taught freely and aboveboard; there was nothing
672 secret about it. Section 111, of Exhibit J, was a rule of marriage until June 27, 1844; after that it was superseded by something higher in the way of a revelation. That is not a revelation at all, it is merely a resolution passed by human authority. Yes, sir, there was a law on polygamy before 1844, which was found in the Bible.

Yes, sir, I had more wives than one after 1844; but I wanted to see how the land laid before I took more than one, so to speak. I waited until I was sure it was all right. Exhibit 102, page 47, from which I read this line, "Zenas H. Gurley, proxy for Hyrum Baxter." I do not mean to say that Zenas H. Gurley had more wives than one; I do not mean to say that he was married to a man; it reads that Zenas H. Gurley was proxy for Hyrum Baxter. Of course Baxter is a man. That is all there is to it; Gurley just acted as a proxy, and had nothing at all to do with the woman, for she was dead, and that had nothing to do with polygamy; had nothing at all to do with polygamy. Yes, sir, I have had more wives than one at the same time. Well, I will tell you, I do not think it is necessary to tell you whether I had more than two wives at the same time, but I had all
673 that I wanted, and could have had more than I did if I had wanted them, but as it happened I did not want them. It does not matter how I got them, whether it was by virtue of the Law of the Lord as set out by Strang or not. I never believed in polygamy until after I read the Law of the Lord as set forth by Mr. Strang. I did not believe in the doctrine or in practicing it under this constitution (referring to Exhibit J), but under the constitution that Strang put
674 out, I believed it was all right. I know that I changed my views on the question of monogamy and polygamy, and under Strang's administration indorsed polygamy, and practiced it also, and taught it. Never preached it but once that I remember of, until this Law of the Lord that was published by Strang. I understood that the constitution of the church made it unlawful for a man to have more than one wife; but when this Law of the Lord was translated by Strang, it superseded the laws of the original church; that was the way we did it.

---

685 EMBER MASON, of lawful age, being produced, sworn, and

examined on the part of the Defendants, testified as follows:—

I live about five miles and a half west of Independence, on the Westport road; that has been my home since 1833, nearly all the time; I have traveled in going to and from my home to Independence, what was known as the Independence and Westport road. I mean it is the road that runs out by the Temple Lot. The Mormon church is on the right hand side of the road going west, and the Temple Lot is on the left hand side of the road; the church is right across the road from the Temple Lot. The Missouri Pacific bridge is further west
686 on the road west to the Temple Lot, and west of the lot that the stone church stands on. A little southwest of them to the bridge; then the road runs in a kind of southwesterly direction; runs west, and as you get down to the church and the Temple Lot and beyond that it turns to the south.

Beginning at the Pacific bridge, or near the Pacific bridge, and coming this way, it seems to me there was a fence on the south side of the Westport road, but it has been so long ago that I cannot remember it. It kind of runs in my head that there was a fence there before the war. It was on the south side of the Westport road. I think it extended southwest pretty near to where the Pacific bridge is; I would not be certain as to that. I suppose it is about three hundred and fifty yards to the Temple Lot from where the Pacific bridge now is, to the west side of the Temple Lot; to come to the east side of the Temple Lot would be just adding the width of the Temple Lot to three hundred and fifty yards.

I do not know exactly how far the fence extended; do not remember distinctly how it was; I do not know how far the fence extended on the south side of the Westport road; I think there was a fence along there; am sure there was a fence along the south side of part of that road beginning at the bridge there over the Missouri Pacific track and coming this way.

I could not tell you when it was; it was before the war that I mean. It was a stone fence.

I cannot state positively that the fence extended east so as to come past the present ground called the Temple Lot. There was a field
688 in there where the fence was around, I suppose. I do not know that I was ever all around it, but they had stuff there growing in it. The fence I have testified to was a fence on the side of a field, as I understand it. A field or a pasture, but I do not know that it was an inclosure, it fenced off the Temple Lot from the road. I think the Westport road was the north line of the inclosure.

I cannot give an approximate idea as to where the east line of the inclosure was; I cannot tell where it was. I cannot say whether the east line of the inclosure came past the west side of the Temple Lot or not. Possibly it did, but that is something I cannot say.

689 All the ground down there was called the Temple Lot once, and is yet called the Temple Lot or Ground by many. I do not think I can tell you anybody who lived there before the war; I think Poole lived

down there somewhere, but I do not remember what time that was. I cannot say that it was on the ground that was fenced in; I know he lived there north of the railroad, but the fact is I do not know whether it was on the land that is inclosed or not.

I reckon that was forty-five or fifty years ago, maybe more, maybe less, but I think it was that long, anyhow. I do not remember anybody else that lived there; and if there was anybody, I have forgotten it. Sam Woodson had the stone fence built. He got the rock over where Chrisman's house was burned, pretty near south of the church there. I do not know exactly now where it was, but it was in the neighborhood of Chrisman's house that was burned. I saw them
690 when they were building the stone fence; I saw Woodson there occasionally. The fence was built prior to the war. The stone fence was partly moved prior to the war, that part of it right along the road east of the Pacific bridge. I mean the northeast end of the fence. Mr. Woodson moved it; I think he moved it right south, on the south side of the road running by the blacksmith shop. The blacksmith shop is not there now since the Dummy line took our road away. I do not know whether it was Page's blacksmith shop or not; I never had any work done there, but it was beside the depot there. Where the fence was moved to is on a line south of the Temple Lot, and is fenced in. The road divides the Temple Lot from where the fence was moved to. I do not know anything about what point with reference to the Temple Lot the fence was moved to. Of course I saw them moving it, but I do not know who it was that moved it; only I remember seeing Woodson there moving it, but I do not know anybody else that was there. The fence was along this road out here, and it was moved off and down south of where it had been. That is the stone in the fence had been moved. I was along this stone fence at one time during the war, when there was a little fun one evening. The "bushwhackers" had to jump that fence to get after Blake's men; used the fence for breastwork. I went out there to see the fun, but it was all over before I got there.

CROSS-EXAMINATION.

691 I know exactly where the piece of ground that is fenced and called the Temple Lot is; I know its exact location, and have known it ever since 1833. I do not know that I ever saw anybody working on that ground that is fenced and called the Temple Lot; never did that I recollect of. I saw them building the fence there, and maybe you call that working. I cannot be positive as to where the stone fence
692 did come to; I know it was down there on the south side of the Westport road to the west of that piece of ground that is called the Temple Lot that is now fenced in. I am pretty positive that it came up pretty close to the west line of the Temple Lot, as it is now fenced in. I know there is a three-cornered piece outside of the fence there. I do not know whether the rock fence stopped on that piece of ground or not and then turned south down the street. That

would be right west of where the fencing is now, and run right south
693 from that. I will not swear that the fence came up pretty near to the end of where that Mormon church is out here; I could not do that, for I do not remember just where it did come. I remember there was a fence there and that is all. This ground has always been known as the Temple Lot ever since I came to this country. I heard of it before I came here, and it has never been known by any other name since I came here. It has always gone by the name of Temple Lot or Temple Ground. They held meetings there out of doors, as I understood it, but I never went to any of them myself. When I first came here in 1833 the Temple Lot was mostly timbered land; the timber had been partly cut off of it,—most of the timber had been cut off,—but it had all been timbered land. The timber had been cut off along this street out here, the Westport road as it was called. The timber was pretty well cut off it when I came here. I cannot tell how far back the timber was cut off; there was scattering trees on it, but I cannot say how far back the timber had been cut off. I do not know whether part of this land inclosed by the fence was used for the purpose of pasturage or not. I know what farming is, but I cannot say whether any of it was farmed or not. I said that in my examination in chief, but I do not know whether it was farmed or not. I remember there was grass there, for I recollect seeing them cutting grass on part of that ground. I do not know that I ever remember of seeing cattle pasturing in there, but I suppose they did turn their cattle in there to graze.

---

695 E. L. KELLEY, of lawful age, being produced, sworn, and examined on the part of the Defendants, testified as follows:—

The Reorganized Church of Jesus Christ of Latter Day Saints of which I am the Bishop recognizes the King James' Translation of the Bible, which is marked Exhibit C, as a work of authority in the church; it is regarded as authority on questions of doctrine in the church which I represent or to which I belong.

The book marked Exibit D, entitled the "Holy Scriptures," is recognized by the church to which I belong, and is accepted by it for what it is worth, and it is used by our people simply for what it purports to be. It is regarded as a book of authority, but it has never been accepted by our church to take the place of what is known as the King James' Translation of the Bible.

696 It has never been accepted to take the place of the King James' Translation, but it is believed by our people to be more fully translated on many points than is the King James' Translation, as was stated, and I think correctly, by Presidents Smith and W. W. Blair while on the witness stand; we simply use it believing it to be a better translation in many regards, and possibly not in some. We accept it in the church as authority simply for what it is worth, and nothing more; simply for what it shows on its face to be.

I recognize what you read from Exhibit M, being a resolution by the General Conference of the Church, September 13, 1878. There is nothing wrong about that.

697 I recognize the import of the resolution; but whether it is a correct copy I could not say, for the reason that I did not have anything to do with it at all; that is, I mean to say I did not have anything to do with compiling it, or the reading of the proof afterwards, and I found there were some errors in that little pamphlet you read from after it was printed, but I do not know that there were any errors in that respect; that is, so far as you have read.

In other respects there were errors, but I cannot testify as to whether that is a correct quotation or not. If you have the records in your possession, from which that was taken, you had better examine them and see if that is correctly quoted or not. I presume that it is a correct quotation. Assuming that that was the proper wording of the resolution I would presume that it referred to the translation by Joseph Smith, because that is the title of it; that is the title of the translation; it is called "The Holy Scriptures."

I am pretty well acquainted with the translation of the Holy Scriptures by Joseph Smith, marked Exhibit D, and also of the contents of Exhibit C, being the King James' Translation of the Bible, I am well acquainted with both.

I think I am sufficiently acquainted with them to know whether they teach conflicting doctrines; at least I am to my own satisfaction, but whether my knowledge would satisfy other people, as to what is perfectly satisfactory to myself, I cannot say.

698 I think there is considerable difference in certain things, in minor things, after the character of the corresponding texts that were introduced this morning. For instance, in the King James' Version it is stated that the Lord plagued the people because they made the calf that Aaron made, whilst in Exhibit D it reads that the Lord plagued the people because they worshiped the calf that Aaron made. There is manifestly an error in the King James' Translation as it is termed.

There is no material difference, and I deny absolutely that there is any difference in the doctrine taught in these two books; there are differences that do not affect the question of doctrine at all, as in the example I have given you. There are differences simply in the translation of the same kind as there are differences between the King James' Translation and other translations of the Bible.

In reading what is termed the Holy Scriptures you will get ideas that you do not readily gather from reading the King James' Translation. In the latter they are somewhat clouded, and in the former they are put in such a way as to be more readily grasped and understood; but after comparison you will find that the same thought is held out in both. There is no claim or pretence of a claim by the church to which I belong that the two teach different or conflicting doctrines, and in all my ministerial work I have heard the King James'

Translation quoted, and I myself have carried it for the last thirty years, and have used it during the whole of that time when I have had occasion to use any Bible. I have used it as a minister since 1871, or twenty-one years.

---

699 H. G. HENLEY, of lawful age, being produced, sworn, and examined on the part of the Defendants, testified as follows:—

I am deputy circuit clerk of Jackson county, Missouri, at Independence, and in charge of the office at Independence. I have been in charge of the office here at Independence since 1887. The paper you hand me is a transcript of the proceedings of the case of Samuel H. Woodson, plaintiff, against Robert G. Smart, administrator of the estate of John Maxwell.

---

700 P. H. GRINTER, of lawful age, being produced, sworn, and examined on the part of the Defendants, testified as follows:—

I am a civil engineer and land suryeyor. I have transacted business here in Independence, as a land surveyor. I was city engineer here for several years; I am acquainted with the boundaries of the city of Independence. The plat marked Exhibit "A. S. O.," is a plat representing certain lands within the city of Independence. These entire pieces bounded by the lines marked in blue on the plat is property conveyed by Jones H. Flournoy to Edward Partridge. I know where St. John and Dawson's addition to the city of Independence is located; there is something on the map corresponding to it. The part of the map that is colored yellow represents St. John and Dawson's addition.

CROSS-EXAMINATION.

703 I said my occupation was civil engineer and land surveyor. In part I made the plat from which I have been testifying. My testimony is confined to the part of the plat which I made myself. The part that I made was made from measurements taken on the ground, within the last few years.

Defendants now offer in evidence certified copy of a deed from Lydia Partridge and Elizabeth Partridge, heirs of Edward Partridge, to James Poole, which is marked Exhibit "B. S.," purporting to convey the land in controversy in this case with other land, and Plaintiff admits that the original is not within the possession or control of the Defendants.

Plaintiff objects to the introduction of the paper Exhibit B. S., because it is not acknowledged according to law, and on the further ground, that it is incompetent and immaterial, and because the grantors had no interest in the land described in the deed at the time of its execution.

Defendants now offer in evidence an original deed from James Poole to John Maxwell, marked Exhibit "D S"

Plaintiff makes the same objection to this deed as was made to the last deed offered in evidence, except as to acknowledgment.

Defendants now offer in evidence a deed made by James Poole by Benjamin F. Thompson, sheriff of Jackson county, Missouri, to John Maxwell, marked Exhibit "D. S. A." It is admitted that the original is not in the possession or control of the Defendants, to the introduction of which the Plaintiff makes the same objection as to the last deed offered in evidence, and the further objection is made that the Court rendering the judgments under which the sheriff made the sale had no jurisdiction over the Defendants, or the land described in the deed.

704 Defendants offer in evidence deed of Lemuel I. Edwards to Samuel H. Woodson, and it is admitted that the original is not within the the control or custody of the Defendants; it is marked Exhibit "A. S. A."

Plaintiff objects to the introduction of Exhibit "A. S. A." for the same reason that the last deed offered in evidence was objected to, except as to the jurisdiction of the Court rendering judgment; and it is objected to for the further reason that the description in the deed is void and uncertain; and it is further objected to because the acknowledgement is not made in compliance with the statute.

Defendants now offer in evidence a deed of Robert G. Smart, administrator of the estate of John Maxwell, deceased, and others by John G. Hayden, Sheriff of Jackson county, Missouri, which is marked Exhibit "H. S." It is admitted that the original is not in the possession, custody, or control of the Defendants or any of them.

Plaintiff objects to the introduction of Exhibit H. S., for the reason that the Court rendering the judgment under which the execution was issued and the sale made had no jurisdiction over the Defendants nor over the property sold.

Defendants offer in evidence the original deed of John Maxwell, by John G. Hayden, sheriff of Jackson county, Missouri, to John Montgomery, marked Exhibit "I. S."

To which Plaintiff objects because it is incompetent, and because the Court rendering the judgment under which the execution was levied and the land described therein was sold, had no jurisdiction over the person or property described in the deed, and the judgment was void.

Defendants offer in evidence an original deed of John Montgomery to John H. Hedrick, marked Exhibit "J. S."

To the introduction Plaintiff objects because it is incompetent, irrelevant, and immaterial.

705 Defendants offer the original deed from John G. Hayden, to the heirs of John Kelley, deceased.

To which Plaintiff objects on the ground that it is incompetent and irrelevant, and for the further reason that the Court authorizing the sale of property by the sheriff did not have any jurisdiction of

the subject matter nor of the parties, and that the deed does not contain the recitals required by the law.

Defendants now offer in evidence deed of John Kelley, estate by George W. Buchanan, administrator to J. H. Hedrick, marked Exhibit "L. S."

To which Plaintiff objects for the same reason made to the last deed offered in evidence, and makes the further objection that it is not acknowledged as required by law.

Defendants now offer in evidence a copy of deed of Robert G. Smart, administrator of the estate of John Maxwell and others by Sheriff, John G. Hayden, to Thomas H. Swope. It is admitted that the original is not in the possession or under the control of the Defendants.

The Plaintiff objects to the introduction of Exhibit M. S., because it is incompetent, irrelevant, and immaterial, and for the reason that the Court authorizing the sale of property had no jurisdiction over the subject matter, or the parties, and the party executing the deed had no authority as a matter of law to execute it, and as a matter of fact had no authority to execute it. And for the further reason that it does not describe the property in controversy in this case, nor any part of it.

Defendants now offer in evidence copy of deed from Thomas H. Swope to Jacob Tindall, marked Exhibit N. S. It is admitted that the original is not in the possession nor under the control of the Defendants, nor any of them.

Plaintiff objects to the introduction of Exhibit N. S., for the reason that it is incompetent, irrelevant, and immaterial, and for the further reason that it is not acknowledged according to the law.

Defendants now offer in evidence an original deed from Jacob Tindall to John H. Hedrick.

To which the Plaintiff objects for the reason that it is incompetent and immaterial; they also object to Exhibit O. S., for the further reason that it does not appear that the grantor had any interest in the property conveyed and described therein.

706 Defendants now offer in evidence from Joseph C. Irwin and wife to William Eaton, an original deed, marked Exhibit "P. S."

To the introduction of which Plaintiff objects because the same is irrelevant, incompetent, and immaterial, and for the further reason that the grantors had no interest in the property described in the conveyance.

Deed now offered in evidence from S. H. Woodson and wife to Adolphus Kean and others, and it is admitted that the original is not in the possession of the Defendants or any of them.

To the introduction of which Plaintiff objects for the same reason and on the same grounds as to the last deed offered in evidence, and the further objection is made to Exhibit "Q. S." that the acknowledgement is not in due form of law, nor as required by the laws of the State.

Defendants offer the original deed from Maria McLanahan and Susan Nelson to William Eaton, marked Exhibit "R. S."

To which the Plaintiff objects because it is immaterial, irrelevant, and incompetent, and for the further reason that it is not acknowledged as required by law, and that the grantors named in the conveyance had no interest in the property described in said conveyance.

Defendants offer in evidence an original deed from William Eaton to Granville Hedrick trustee, marked Exhibit "S. S."

To the introduction of which Plaintiff objects for the same reason as was made to the last deed offered in evidence, except as to its acknowledgement; and the further objection is made that the grantee named in the deed was not the lawful trustee for the church at the time the deed was executed, nor was he the lawful trustee for the church at any time subsequent to the date of its execution.

Defendants offer in evidence an original deed from J. H. Hedrick and wife to Granville Hedrick, President of the Church of Christ, and trustee in trust for the said Church of Christ, and now right after the words *Church of Christ*, as it appears in here, are the words in parenthesis *Latter Day Saints*, which deed is marked Exhibit "T. S."

To the introduction of which Plaintiff makes the same objection as was made to the other deed last offered in evidence.

707 Defendants now offer in evidence a copy of a deed from Margaret J. Woodson and others to David Judy, President, and it is admitted that the original is not within the possession nor under the control of the Defendants or any of them; deed is marked Exhibit "U. S."

Plaintiff objects to the introduction of the deed for the same reasons as shown in objection to the last deed offered, and because it is incompetent, immaterial, and irrelevant, and does not describe the land in controversy in this case, and for the further reason that the grantors named therein had no interest in the property in question, and that the grantee therein was not at the time of the execution of the deed offered in evidence, President of the church, nor the trustee in trust of the church to which the property was conveyed.

Defendants offer in evidence a copy of the original plat of Woodson and Maxwell's addition to the town of Independence, and it is admitted that the original plat is in the possession of and under the control of the recorder of deeds for Jackson county, Missouri, the same is marked Exhibit "V. S."

Defendants offer in evidence the plat of St. John and Dawson's addition to the city of Independence, Missouri, marked Exhibit "W. S.," also a plat of St. John's addition marked Exhibit "X. S.;" also a plat Prospect Place, an addition to the city of Independence, marked Exhibit "Y. S.," and the plat of Torpey and Surface subdivision of Lots four and five, and the east part of Lot 6, in St. John's addition to the city of Independence, Missouri, marked Exhibit "Z. S."

Plaintiff objects to each and all of the plats offered in evidence for the reason that they are incompetent, irrelevant, and immaterial, and do not describe the property in controversy in this suit.

---

708 THOMAS MAXWELL, of lawful age, being produced, sworn, and examined on the part of the Defendants, testified as follows:—

I recognize on this map marked Exhibit A. S. O., within the blue lines a tract of land with which I am familiar. I should say I have known it for forty years or more. I did not know it as far back as 1848; I have known it ever since I remember, but I was too small to say I knew it in 1848. I have known that place from 1850 up to the present time. I was about seven years old in 1848. I should say somewhere in 1850 or 1851, from that time until now I can recollect the property. I do not know that I could say anything about any improvements that were on the place at any time. It strikes me that
709 the place had been fenced, but I cannot say positively; I could not say that my father fenced it.

My father died in the latter part of April, 1856. I know one thing; there was a little corner in here, west of the Temple Lot, just west of the Temple Lot; I remember that my mother leased it to a man by the name of Trott for a brick kiln. I could not say as to there being any field on any part of the ground; I could not be positive on that score at all.

711 I know there has been a great deal of trouble there over that property. Woodson never had it in his possession or any part of it that I know of.

I know something about the rock fence on the line; I remember there was a rock fence on some of these lines. I cannot say where all of it was, and I cannot say that it was on the line, but I think it was. I cannot tell you anything about the extent of the rock fence, nor can I tell you much about the size of the field, or how much there was of the rock fence. I remember there was a pretty long piece of it, for I recollect getting behind it one night to try the Federals a whack during the war.

The fence had been there a long time before that; it was not a new fence at that time. I guess it was put there before I was old enough to remember anything about it. It was put there to inclose that land; of course it was not put there for fun; put there to inclose the ground inside of the blue lines as indicated on this plat, but it does not seem to me that it went away up there, but it went a part of the way.

712 I would say that the fence went up to Walnut Street, and it strikes me that it run up further east than that, but I could not say how far it did run. Of course I knew at one time where it was. The field was on the south side of Walnut Street. I know there was a considerable little field in there; I know it run out there to Woodson's, and that is on Temple Street.

I do not know who inclosed it; I do not recollect anything about

that. My father owned some of it. That part of it that was fenced was inclosed. I cannot say that it was cultivated; I do not remember whether it was cultivated or not, or in pasture at that time, but it was under fence, I remember. I remember that well enough, and I expect there are others who remember the same thing.

713 Old man Murray must have lived in Woodson and Maxwell's addition as long ago as 1850. I expect he was there in 1855. I do not remember when he died; the house was there in 1860, I do not know whether the house is there now or not. It was a little brick house. I have not noticed it lately, and so I cannot say whether it is there or not. I do not know that there was anybody else living in there at that time, or about that time. I said I thought there was another house built in there before the war, and still I do not know whether there was or not.

There has been considerable building there in Woodson and Maxwell's addition. It is mostly all built up you might say,—houses built on all the lots. Beginning in 1850 and continuing from that time down, that was the time the building commenced, and they may be building there now, for all I know. I know of some buildings south of Walnut Street, yes, sir; I do not call anything to mind about buildings south of Walnut Street before the war.

CROSS-EXAMINATION.

714 I think it is true that the stone fence of which I have spoken was on the south side of Walnut Street, and extended from Temple Street, east, to the northeast corner of Chrisman's property.

I am not testifying to anything positively here since I have been testifying; I have just been giving the best of my recollection. I do not say positively where the fence was, and I would not say that the stone fence was not on the south side of Walnut Street, and extended to the northeast corner of Chrisman's property. I remember it was a stone fence, because I was behind it with a gun, and it made a pretty good breastwork. My recollection is that there was a stone

715 fence on the south side of the Lexington road, from the Pacific Bridge, and extended along the south side of the road, to about Walnut Street; that is where it ran according to my recollection of it. That is the way I remember it.

I do not say now, nor I did not say that there were any houses built on these lots from fifteen to twenty-two; I do not think there has ever been a house built on any of these lots, except the little church built there now; if there ever was a house there, I do not remember ever seeing it, and I do not believe there ever was. If there

716 was I do not remember anything about it, and that is what I have said all the time. The little house that is built on some of these lots now is the only house I ever saw built there. I do not remember that I ever saw a fence inclosing these lots except the fence that is there now. The fence that I recollect being along the south side of the road,—I mean along Lexington Avenue and Walnut Street,—that is the only one I can swear to.

W. R. MOORE, of lawful age, being produced, sworn, and examined on the part of the Defendants, testified as follows:—

I am the same W. R. Moore who testified in this case on the part of the Plaintiff, that I was the deputy recorder. I have charge of the records in the recorder's office here at Independence. The book I have in my hands at the present time is what we call the "original entry book." It came from the recorder's office of Jackson county, Missouri. The book has no title to it. It is the book, if I understand it right, that shows who entered land from the government. I find in this book where Edward Partridge entered land in this county. Yes, sir, lots of it.

717 Defendants offer in evidence tax receipt of the Collector of Jackson county, for the taxes paid on lots 2, 3, 17, 18, 19, and 22, in Woodson and Maxwell's addition to the city of Independence, for the year 1866.

To the introduction of which Plaintiff objects for the reason that it is incompetent and immaterial, and does not show on its face that it was paid by anyone interested in this case.

ALMA OWENS, of lawful age, being produced, sworn, and examined on the part of the Defendants, testified as follows:—

I did not have anything to do with the Temple Lot or Property as far back as 1867. I will say that it came into my hands probably 718 about 1878 or 1880, or along there sometime. I have seen the tax receipt for 1866 before; it was in my possession in connection with other papers that were put into my hands by the church. If I am not mistaken this receipt along with a lot of other papers was given to me and Mr. Hill, down at Gardiner, by the widow of Granville Hedrick. That is my impression; I cannot remember the date, but it strikes me it was in 1880, 1878, or 1880, somewhere about that time. I have not had it lately; they were all turned over to Mr. Hill, it along with the other papers. I think I turned it over to Mr. Hill about the time I got it; do not think I ever took any of these papers home with me. The receipt is marked Exhibit 105. I think I recognize the tax receipt signed by H. H. Williams; I think that was with the papers I got, and which I turned over to Mr. Hill. This receipt is marked Exhibit 106.

To the introduction of which Plaintiff objects on the ground that it is incompetent, irrelevant, and immaterial.

Defendants offer tax receipt for delinquent taxes for lots 16, 20, and 21, in Woodson and Maxwell's addition to Independence, Mis- 719 souri, for the year 1870. The receipt is dated November 10, 1871, and marked Exhibit 107. This was also in the papers that were in my charge and turned over to Mr. Hill.

Plaintiff objects to the introduction of tax receipt marked Exhibit 107, and to each and every one of the foregoing questions referring to it, on the ground that they are incompetent, immaterial, and

irrelevant, and the introduction of Exhibit 107 is objected to for the same reason, but the signature of the Collector to the tax receipt is admitted.

Defendants offer tax receipt, marked Exhibit 108, purporting to be a receipt for the payment of taxes on lot 16, 20, and 21, in Woodson and Maxwell's addition to the city of Independence.

To the introduction of which Plaintiff makes the same objection as to the last tax receipt offered in evidence.

Defendants offer tax receipt, marked Exhibit 109, purporting to be a tax receipt on lots 16, 20, and 21, in Woodson and Maxwell's addition to the city of Independence.

To which Plaintiff objects for the reason that it is incompetent, irrelevant, and immaterial, and shows on its face that it was not paid by anyone interested in the property in controversy.

Defendants offer Exhibit 110, purporting to be receipt for taxes paid on lots 16, 20, and 21, in Woodson and Maxwell's addition to the city of Independence, for the year 1873.

To the introduction of which Plaintiff makes the same objection as to Exhibit 109.

---

720 RICHARD HILL, of lawful age, being produced, sworn, and examined on the part of the Defendants, testified as follows:—

Yes, sir, I know something about the tax receipts, which have been testified to here by Mr. Owens; I know that I have had them in my possession for about ten years. I got them from Mr. Owens, all the tax receipts that have been presented were obtained by me from Mr. Owens.

ALMA OWENS, direct examination resumed by Defendants:—

Defendants offer in evidence Exhibit 111, purporting to be a tax receipt for taxes paid on lots 16, 20, and 21, in Woodson and Maxwell's addition to Independence, Missouri.

Objected to by Plaintiff because the same is incompetent, irrelevant, and immaterial, but the signature of the Collector is admitted. I have seen this tax receipt before; I got it from the Collector myself. I paid the money; I paid it for the church.

We call it the Church of Christ, but by some it is called the "Hedrickite faction" in the Mormon Church; the Defendant church in this case. The taxes were paid as represented by this receipt for the Defendant church. Receipt is marked Exhibit 112, and purports to be tax receipt dated December 2, 1875, on lots 15, 16, 17, 18, 19, 20, 21, and 22, in Woodson and Maxwell's addition to the city of Independence.

Plaintiff objects to the introduction of pretended tax receipt because it is incompetent, irrelevant, and immaterial. I have seen Exhibit 112, before; I had it in my possession with these other papers.

721 RICHARD HILL:—Yes, sir, I have seen Exhibit 112, before; I have had that in my possession; I obtained it from Mr. Owens when he turned over the papers to me.

Defendants offer in evidence Exhibits 113 to 142 inclusive, purporting to be receipts for taxes paid on lots 15, 16, 17, 18, 19, 20, 21, and 22, or some of said lots.

To the introduction of which the Plaintiff at the time of the offer objected to each receipt separately, and at the close of the offer objected to each and all of the Exhibits for the reason that they were incompetent, irrelevant, and immaterial, but the signatures to each of the receipts were admitted, and Plaintiff now moves the Court to exclude the same from the record.

ALMA OWENS, direct examination continued by Defendants:—

726 I gave attention to the lots in controversy in this case, about which I have been testifying, because I was the clerk for the church, and the agent for the church.

I gave attention to the affairs of the church besides paying taxes. I was one of the committee that had charge of the improving of these lots, of this Temple Property, and of taking care of it. I assisted some in engineering its improvements, and was present at the time that Mr. Hickman gave us the boundary, and I gave it my time and attention, and assisted in planting out some trees on it, and fencing it.

I assisted in fencing it and looking after it generally. I do not know that I can state positively when it was fenced, but I might if I had access to some receipts that were given, or something of that kind.

The paper you hand me to refresh my recollection is a receipt for work on the Temple Lot, for money paid to Mr. Williams. After reading the receipt: Well, the receipt is so written that I really 727 cannot make it out; it seems to be 1882; the signature to the receipt is H. P. Hall's; I only know the signature from the fact that I paid him the money, and he handed me the receipt. I cannot say that I saw him write that receipt. I handed him the money, and in return he gave me that receipt, marked Exhibit 143. This paper that you hand me is a receipt from G. M. Nichols for the wire that is around the Temple Lot.

It is for wire, locks, hinges, and other things and material that they furnished in fencing the Temple Lot. This work done on the Temple Lot was fencing the lot with posts and wire, and planting out some trees on it; the work was done during the summer 1882.

The work was done upon what was known as the Temple Lot or Ground. It was the same ground that has been so often described here,—the land in controversy here.

728 I did that work and paid out the money for the church, as I have before mentioned,—the Defendant church in this case. I got the money from the church; well, there was a fund in my hands at that

time belonging to the church; the money came from different sources at different times, and in different amounts at various times to defray the expenses of the church.

Money from which taxes were paid usually came from contributions. At that time there was a fund in my hands that came from William Eaton which belonged to the church, and it was turned over to me as the agent of the church to pay these expenses with. I do not remember the amount of the fund, but it was applied in building sidewalks, fencing, and otherwise improving the lots, together with other money that was put into my hands for that purpose.

CROSS-EXAMINATION.

729 Yes, sir, I said that I paid these taxes in the interest of the Church of Christ. I so understand it to be the Defendant in this case. I think I can state when that church was organized; my understanding is that it was organized on the 6th day of April, 1830. I cannot say at what place, because I do not pretend to be very well acquainted with all the facts connected with its organization further than they are recorded in history.

I understand it was organized in New York. It was organized by Joseph Smith; he was the founder of the church, and with him I understand were associated Oliver Cowdery and others. I understand there were five or six of them associated with him; they claimed to have perfected the organization of the church; that is the original organization, as I understand it from history. I understand it is the same church that is referred to in the deed from John H. Hedrick to Granville Hedrick.

Q.—Was it the same church, or is it the same church that is referred to in the deed from John H. Hedrick to Granville Hedrick as the "Church of Christ of Latter Day Saints?"

A.—Yes, sir, and it is the same church that I spoke of in my testimony in chief as being the "Hedrickite faction of the Mormon Church." That is what people sometimes call it, but we call it the Church of Christ.

It is the same church that between 1830 and 1833 moved its headquarters from Kirtland, Ohio, to Independence, Missouri. We calculate it to be the same, the same organization; and the same organization that went from Independence, Missouri, because of the persecution to which it was subjected, into Caldwell county, Missouri. And the same organization that was afterwards driven from Caldwell county, Missouri, to Nauvoo, Hancock county, Illinois. It is the same church, yes, sir; that is the way I figure it up.

Q.—Well, what do you figure out?

A.—That it is the same church.

Q.—I will ask you if you know of your own knowledge about the time that Granville Hedrick first united with the church that was organized in 1830?

730 *A.*—No, sir, not of my own knowledge. I always understood him to be a member of the original church; I never understood him to be

anything else but a member of the original church, always, up to the time of his death.

He was the same party who claimed to be the First President of this church here known as the Hedrickite faction of the church, and he was trustee also of that faction, for the Temple Property here, and the Mrs. Hedrick that I have testified about was his wife,—wife of Granville Hedrick, and is his widow now.

I obtained some of these tax receipts and papers that I testified about in my examination, from the widow of Granville Hedrick. I did not get all of them from her; I got the tax receipts that I had from her, excepting what I paid myself from the death of Hedrick up. I do not know that I got all of them. Mr. Hill and I were together at the time I got these papers.

I do not know when the Hedrickite Church was organized as a faction; do not think it ever was organized as a faction. I am rather inclined to the opinion that it was not, for I always understood it to be a perpetuation of the original church as it was organized in 1830. That is the way I always understood it to be,—the perpetuation or succession of the original church that was organized in 1830.

731 Yes, sir, I recognize that there was a disorganization of the church that was organized in 1830, along about 1844.

Yes, sir, a disorganization of the church organization effected on the 6th day of April, 1830, about 1844.

The church split or was cut up into different factions, and adopted different doctrines. I have heard and have read that such was the fact.

I do not know what time it was with reference to the time of the disorganization, with reference to the time of the death of Joseph Smith, that the faction of the church that is now known as the Hedrickite faction was organized with officers of any kind.

I was not a member of the church at that time; I joined it in 1864. Now I have been trying to get at the answer I believe you wanted, and I will further state that in 1855 my father and Granville Hedrick and some other men began to associate themselves together in prayer meetings and in other ways, and they looked over these things, and offered amongst themselves and to others whom they met their objections to the way that different men who claimed to be the head of the church were trying to build up the cause.

You can call that organization or what you please; I do not know what you would call that. I do not know of anything more definite that occurred prior to that time; I cannot say that I know that absolutely of my own knowledge, but that is the way I understood the matter took form.

732 I could name several who belonged to the church at the time I joined in 1864; there was my father, there was Hedrick, Mr. Charles Reynolds, and William Eaton, and A. C. Haldeman, and John T. Clark; these were leading men in the church when I joined.

My father's name was Jedidiah Owens. I do not know whether he went with Granville Hedrick up into Wisconsin in 1857 or not, to attend the conference; he may have done so for all I know to the contrary. I joined the church in Livingstone county, Illinois. I do not know that there was any trustee of the church when I joined it; I do not think there was any.

Granville Hedrick was recognized as the President in 1864; I cannot tell when he was elected.

733 I am not now the Secretary of the Church of Christ at Independence, no, sir. I cannot state from my knowledge of the records of the church that were at one time in my possession when Granville Hedrick was elected President. I cannot tell the time definitely; I can only state about the time from what I have heard. I do not know, for I was not at the meeting at which he was made President he was made President some time prior to 1864; I cannot say how long it was, but it was some time prior to that date. I could not say it was prior to 1860.

Q.—What is your best recollection as to that?

A.—I do not know. I was not present, and do not know who ordained Hedrick as President.

I am a member now of what is known as the Hedrickite branch of the church,—do not know anything to the contrary,—and for a number of years have been. I mean the church that is one of the Defendants in this suit. I am one of the Defendants in this suit.

I think that my boundaries would not be located within the limits of this branch here at Independence, but according to the strict construction of the matter I might not be located inside the limits of this branch, that is the boundaries of this branch. Yes, sir, there is a limit in the boundary outside of which a person cannot be a member of a branch,—if they are located beyond a certain distance. If I am a member of this branch here at Independence, it is because of a special rule made by this church here at Independence. The rule limits the membership to persons who live within a radius of five miles; it used to be ten miles.

734 I do not know how many years I was acting trustee for the Hedrickite faction here. I do not know that you would call me a trustee; I was the agent and clerk for several years. I think Granville Hedrick, David Judy, and Richard Hill, were all of them at one time recognized as the presiding authority, when I was acting agent or clerk. They did not hold that position all at the same time, and I mean that I was the agent and clerk under each of them. I acted as agent or clerk under Hedrick, David Judy, and Hill, and my action as agent or clerk or both, has been on the understanding or theory held by Hedrick during his lifetime, and Judy and Richard Hill, that it was the legal succession of the church that was organized in 1830.

It was designed to maintain that organization; that is, it was intended to maintain a working organization. There is no branch of

the church organized in the neighborhood where I reside. I do not know any other member of the church to which I belong who lives in the neighborhood that I do. If I do not belong to this branch here in Independence, I do not belong to any branch.

I am known as what is called a scattered member; that is, a member not belonging to any branch, but I have always considered myself and considered my church privileges as belonging to the Independence branch. There has never been any other branch organized in this vicinity to which I could belong.

735 In the church meetings I would not have a right to vote the same as other members would on questions pertaining to local matters or local interests. I would not consider I had, if a strict construction of the law was placed on the rule, and I would not have the right to vote because of the rule that has been established by the church here. I have no right to vote on questions pertaining to local interests here in this branch. I formerly had that right.

I believe William Eaton contributed to the fund that was contributed for paying the expenses here; there was a fund that came into my hands from him, but they came into my hands as funds that belonged to the church, from his estate.

I think his wife at the time was a member of the Reorganized Church of Jesus Christ of Latter Day Saints, the Plaintiff in this suit. I do not know whether she contributed anything to the fund

738 or not. I do not remember the date of the death of Granville Hedrick; I think it was in 1881. I have no date to go by; but I think it was then; if I am not greatly mistaken, it was after his death that I received the papers that I testified about, from his widow Mrs. Hedrick. Whatever papers I got from Mrs. Hedrick I got after the death of Granville Hedrick.

REDIRECT EXAMINATION.

William Eaton was not a member of the Reorganized Church of Jesus Christ of Latter Day Saints. I always understood that he was a member of the Church of Christ.

Before proceeding with the cross-examination of Mr. Hill, Plaintiff moves the Court to exclude from the record all the tax receipts offered in evidence heretofore on behalf of the Defendants, for the reason that they show on their face that the property which they purport to be the receipts for taxes paid thereon was not liable to taxation, being church property.

---

739 RICHARD HILL resuming the witness stand testified as follows, on cross-examination:—

I live in Independence, Jackson county, Missouri; have lived here since the spring of 1868. I am an elder in the Defendant church, and I hold the office of Bishop in the Defendant church; that is about all the offices I hold, I believe. I was ordained an elder, if I am not mistaken, in 1870. I first became a member of the church in 1848;

that is when I joined. I became a member in England; I think the man's name was Mitchell who baptized me, but I am not really sure about that. I held the office of priest in the church that I first joined; I held that office by ordination; I believe the man's name who ordained me was Broderick; he ordained me in England, in 1848, I believe; in the latter part of the year, I think it was. Well, I do not know that it is necessary for me to answer whether I have been baptized more than once. I do not think it makes any difference whether I have been baptized once or twenty times.

Q.—Well, we think it is necessary, and we insist upon your answering it. Have you been baptized more than once?

A.—Well, I do not think it is necessary for me to answer that question; I do not think it is necessary at all.

740 *Q.*—Have you been baptized more than once?

A.—I have answered the question.

Q.—No, sir, you have not, and I insist upon the answer.

A.—I have given you all the answer you will get. I decline to answer that question, and I decline to answer it because it has nothing to do with this case. I decline to answer it because I think it is not important, and has no reference to the case at all.

Q.—Is it not true that you never were baptized but the one time?

A.—I decline to answer that question.

By Mr. Southern: "I insist that it has nothing to do with this case, and the witness declines to answer that question; now if you have anything to do with the witness, just go ahead and do it."

By Mr. Kelley: "Let the record show this, that without waiving our right to have the question answered, we will not insist upon the question."

By Mr. Southern: "I think it is wholly unimportant in this case, and has no possible bearing on the case; nevertheless, I will advise you, Mr. Hill, if you have no other reasons than what you have stated, to answer the question. I do not see that it does any harm, or cuts any figure one way or the other."

A.—Well, I think best not to answer it, and therefore I decline to answer it.

741 *Q.*—When did you unite with the Defendant church in this case?

A.—When did I unite with it? What has that to do with the case, I would like to know?

Q.—Yes, sir, when did you unite with it, and let the record show that counsel for the Defendants one of whom is the witness, notifies witness when he can answer a question asked him.

A.—I consider that I became acquainted with this church that you call the Defendant church, when I first joined the church in England in 1848. That is the way I consider it, for I consider it is the same church I united with in 1848. Yes, sir, with the Defendant church; I cannot say that I ever at any other time united with the Defendant church except at that time in 1848, that I have stated. I claim that

the church that I am now with is a part and parcel of the church that I first associated myself with in 1848.

Yes, sir, I claim that I am a member of the same church now that I associated myself with, or joined in 1848.

Q.—Were you not baptized into the Defendant church after 1848?

742 *A.*—I decline to answer.

Q.—For what reason do you decline to answer?

A.—Because it does not have anything to do with the case at all. That is my reason for declining to answer; I do not consider that the fact of whether I was baptized or not cuts any figure whatever. It does not make any difference whether I was baptized once or a hundred times, that I can see.

Q.—Have you been baptized into the church since the year 1883?

A.—No, sir, I do not remember that I have been baptized into the church since the year 1860. I will not swear that I have not, but I do not remember.

Q.—Who baptized you the last time you were baptized?

A.—I decline to answer. Yes, sir, that is what I said, I decline to answer that question, for the same reason that I stated before, for the reason that it has nothing to do with the case, that I know of. And if it had something to do with the case that I do not know of, I would not answer. I am the trustee of the Defendant church in this case, and a member of the Defendant church, and an elder in the Defendant church, and hold this property in controversy for the Defendant church, and hold it adversely to the Plaintiff church; yes, sir, it would necessarily be so, I reckon; that is the way I claim to hold it. I never was a member of the Plaintiff church.

Q.—Who baptized you into the Defendant church?

A.—Well, I am claiming that it is the same church that I was baptized into at the start; it is the same church that was established on the 6th day of April, 1830, and I for one claim it is the same church.

Q.—Who baptized you the second time into the Defendant church?

A.—I decline to answer.

Q.—Were you baptized after the year 1860 into the Defendant church by anybody?

A.—I decline to answer. I decline to answer the question as to whether I was baptized after the year 1860, into any other church. I decline to answer it because I do not conceive that it would be of any importance to the case at all, or cut any particular figure whatever.

The Defendant church, of which I am a member, was organized first, as I understand it, in 1830, by Joseph Smith, Oliver Cowdery, and a few others, at some place in the State of New York.

I stated in my examination in chief that I had paid certain taxes on the property in controversy in this case for the Defendant church.

743 The Defendant church has a church organization.

I think I was the presiding officer myself at the time that a goodly portion of these taxes were paid.

At the time that the church was first organized I suppose that Joseph Smith, Oliver Cowdery and others were the first officers. Joseph Smith was the first President of the Church.

Q.—Well, who succeeded Joseph Smith in the Presidency of the Church? Joseph the Seer?

A.—I do not know that anybody ever succeeded him; I do not know of anyone who did.

Q.—Well, who succeeded to the Presidency of the Church after the death of Joseph Smith, the Seer, Prophet, and Revelator?

A.—I do not know; I do not know of anyone. There were several who claimed to succeed him, but I do not believe that anyone did succeed him.

I happened to be the President of the Church, because I was made so by the church; was made President of the Defendant church by the church.

744 I was not the first President of the Church after the death of Joseph Smith. I believe Granville Hedrick was the first President. I think he was made the President about 1863; I do not just remember the time, but it was somewhere near that time.

When he was made President he held the office of an elder in the church; he was not anything else that I know of. I do not think he was made prophet, seer, and revelator. I cannot say whether in the ordination of Granville Hedrick he was ordained to be a prophet, seer, and revelator; I do not know about that; there might have been some such words used, but there was no understanding that the man who ordained him had any authority to ordain him a prophet, seer, and revelator. No man had any authority to ordain him in that way, although he might have used the words.

Q.—Did not Granville Hedrick after his ordination, and while he was President of the Church, publish the fact of his ordination, and state that he was ordained a prophet, seer, and revelator? Did he not after his ordination so claim this to be the fact?

A.—No, sir, I do not think he ever claimed such a thing, but others might have claimed it for him; but if they did, I do not think he consented to any such a thing. I do not say that he did not publish it, I say I do not think he did. I can identify the pamphlet you hand me; I have seen that before; I do not just remember who was the editor of that pamphlet. I do not really know who the editor was. If I ever knew I have forgotten. I took it at different times, of course, but I do not know that I took it all the way through. I took it at times, and recognize the paper. The editors of this paper were the heads of the Defendant church.

I think it is very likely that Granville Hedrick was one of the editors, although I am not certain, for I was not close by them when
745 that was done. A. C. Haldeman was a member of the Defendant church at the time that Granville Hedrick was the President, I am quite positive he was. The pamphlet is marked Exhibit 106, and is

entitled, "The Truth Teller." Page 31 of Exhibit 106, is as follows:—

The Truth Teller will advocate the Primitive Organization of the Church of Jesus Christ of Latter Day Saints, which was organized on the 6th day of April, 1830, and maintain her doctrines in all truth. Also an exposition of all the false doctrines that have been imposed upon the church:—

Tell the truth,
The truth will tell,
And tell it well.
Truth will prevail,
And never fail.

Volume 1. Bloomington. Published by the Church. 1864.

On page 31, of Exhibit 106, in the first column, is the following language:—

The awful scourge that awaits this nation, how, when, and where you can flee to escape it, is plainly shown. Remember this, that these revelations were given through him whom the Church in General Conference, selected by vote, and was ordained President, Prophet, Seer, and Revelator of the church by members of the Quorum of Twelve. About seventeen persons were present on these ever memorable occasions when the God of Israel, in answer to fasting and prayer, filled the house where they were assembled with his Spirit, which made every soul present rejoice in the God of their salvation. Brethren, it will never be forgotten by those who were thus favored with the privilege of being present when God again spoke to his church through the means he had ordained.

I recognize that language. Granville Hedrick, in 1864, at the time
746 this transaction occurred as recited here in Exhibit 106, was an elder of the church that was established in 1830, and had so been an elder five or six years, and I expect as many more. I think he was an elder in the very first year or two that the church existed in 1832 or 1833, I am not certain which, but I think that is the fact. This same Exhibit 106, commencing at the last word in the first column, at the bottom of same page, is the following: "Granville Hedrick, Washburn, Woodford county, has been an elder in the church for about twenty-two or twenty-four years."

A.—Well, I said I did not know how long he was an elder, for I was not there when he was baptized, and all I know about it is what I heard. All that I know is that we had a personal talk about it, and Granville Hedrick told me that he was an elder in the church in Joseph Smith's day, and as far as I recollect he stated that he was an elder at an early date. I do not know who ordained him an elder. I do not know whether William O. Clark, of California, a member of the Plaintiff church, ordained him or not.

I was President of the Defendant church at one time; I cannot remember who it was that ordained me; that is something that I do
747 not call to mind. I was ordained here at Independence, Missouri, to the office of President of the Defendant church, but I do not recollect who ordained me. I expect there was somebody ordained me, but I do not remember the names of the people who took part, and there is no use of your asking me anything more about it, for I have told you all I can about it. I suppose the Defendant church has a record of my ordination to the Presidency; I have the record under

my control, but it belongs to the church. I expect I have read the record, cannot say whether I have read it or not, but it is likely I did, cannot tell anything about it. I do not think it is necessary for me to tell whether I have read it or not.

I expect the parties who ordained me to the office of President were elders, and I have told you that I did not remember any of them; I know they were elders; do not remember how many there were who took part in it. I do not remember at what house it was that I was ordained, whether it was at my house, or at the house of some other brother; I do not remember that now. I do not remember how many were present at that time.

I think George Frisbie was there, but I cannot remember that he took part in the ordination. I do not think it is necessary to remember. I do not remember how far back this record of the church
748 goes; it is away back to somewhere in the fifties, but I do not remember how far back it is. I think the record shows who was the first President of the church.

Q.—Does the record show who was the first President of the church, the first one?

A.—I think it does.

Q.—Well, who was it?

A.—I think it was Granville Hedrick; a man by the name of Judy succeeded him, David Judy; I think he was the President of the church three or four years. I succeeded David Judy; there has no one succeeded me yet.

Q.—Then you hold the office of President of the Defendant Church.

A.—No, sir, I do not hold the Presidency yet. Mr. C. A. Hall is the President of the Defendant church now. He succeeded me. C. A. Hall was ordained President of the Defendant church; I do not know who took part in the ordination; I believe I was one, and G. D. Cole assisted; I do not remember who the other parties were. I held the office of elder, and Cole held the same office. I do not remember exactly when the ordination of Hall took place, but it was three or four years ago, or something like that.

I do not know whether Charles A. Hall was formerly a member of the Plaintiff church or not; he might have been for anything I know to the contrary. He was never baptized into the Defendant church that I know of. I was not there to see whether he was baptized or
749 not; I understood he was baptized into the Church of Christ some time ago, of which we both claim to be members. I do not know whether he was baptized the only time he ever was baptized by an elder of the Reorganized Church, the Plaintiff church. I have stated that I did not know whether it was a fact that he was baptized by an elder in the Plaintiff church or not.

I stated that these taxes that I testified as having paid were paid for the Defendant church. I cannot tell you who composed the Defendant church; I cannot name all the names. There is myself,

George Frisbie and his wife, my wife, Daniel Bauder and his wife, and James Hedrick. Is it necessary that I should tax my mind trying to remember the names of all the members of this church; I would like to know if it is necessary that I should do that? Well, I
750 will say that I cannot recollect any more just now. I could state more if I could remember them.

Q.—Are you present here for the purpose of answering such ques- as you see fit to answer?

A.—I am not here as a witness to answer only such questions as I see fit, but I do not see any necessity for answering these questions. Well, C. A. Hall and his wife, there were several children of Hall's, and several children of Frisbie's that were also members of the church, and there were others besides these. At the present time there is perhaps fifty people who belong to the Defendant church. I do not know that I could swear there was that many; I believe there is about that many; possibly there is more than that, but still I could not swear positively; between fifty and sixty is about as near as I can remember it. I think the names I have mentioned are the most of the members that belong to the branch here, if you include the children in the Hall and Frisbie families. Mrs. Granville Hedrick is not a member of the church; she has been disfellowshipped from the church; she is the widow of Granville Hedrick, President of the Church during his lifetime.

Q.—What was she disfellowshipped for?

A.—Well, now maybe I might answer that question by asking you one: What were you disfellowshipped from the church for? Maybe you might be able to give me some information on that point.

Q.—Well, I belong to the great big church where they do not disfellowship people, and from which you cannot be disfellowshipped?

A.—Well I am glad to know that. You want to know what we disfellowship members for, and I will tell you what it is done for. We disfellowship members for improper conduct, for unchristian conduct.

I do not know that the reason Mrs. Hedrick was disfellowshipped
751 was because she would not consent to the mortgaging of the property in controversy in this case; I do not know that that is the reason. There was a man by the name of Franklin, who, with his wife, belonged to the church; they are not members now, they were disfellowshipped for unchristian conduct, but I do not know that I shall state what it consisted of.

I decline to answer the question where I got the money with which I paid taxes; I decline to answer who contributed it. I suppose the proper answer to the question would be, "I do not know," but it was paid to me by different members of the church.

I do not remember that Franklin and his wife ever paid any. If
752 Mrs. Granville Hedrick contributed any I do not know it; nor did Mr. and Mrs. Haldeman. They have been disfellowshipped, I

should say all of them, and so was Mr. Scholly and his family.

In the Defendant church besides elders we have the office of priest, teachers, and high priests; that is all. No, we have deacons; we have high priests, priests, elders, deacons, and teachers, and we have a bishop, certainly, and a President.

753 The President is not a prophet, seer, and revelator; we do not claim any such power for our President. I believe he was made President by a vote, by the common consent of the church, as near as I can remember. I do not remember anything about by whom the President was ordained; I do not remember about his being ordained; that is, C. A. Hall, the present President. I do not think he was ordained; I think he was just elected by a vote of the body; I think that was the way it was done.

I do not know how many elders we have in the whole of the Defendant church; we have some five, six, or seven,—something like that,—but I cannot say positively, for I do not remember just at the spur of the moment how many. I cannot say how many high priests, but there were some four or five. There are some four or five high
754 priests in the Defendant church; I am one, Cole is another, Frisbie is another, C. A. Hall is one. I cannot remember any more just now. I believe all these I have mentioned were also elders. I do not remember just now who else, besides the ones I have named are elders; yes, sir, James Hedrick is one; he is an elder, but not a high priest; the high priests and elders are the same persons excepting Hedrick; he is an elder, but not a high priest. Yes, sir, altogether we have five officers.

I recollect David Frampton; he was the one who delivered up his license at our conference. I remember that his license was delivered up, but I do not know that it was for the reason that he was prohibited from preaching that Joseph Smith was a prophet, seer, and revelator. I do not know that it was for that reason, but I say that I do not recollect what his reason was for doing it.

The Defendant church believes that old Joseph Smith was a prophet, seer, and revelator, and so teaches. I recollect a man by the name of Martin who belonged to the church; he was a high priest and an elder, but was disfellowshipped; but I would like to know what that has to do with this case, what he was disfellowshipped for.

Q.—Was not the unchristian conduct for which these parties were disfellowshipped, their refusal to consent to the mortgaging of what
755 was known as the Temple Property to certain parties in Salt Lake, to raise funds for the purpose of defending this suit, and other purposes?

A.—No, sir, not that I know of; I do not know anything about the parties making any such claims at the time they were disfellowshipped. We were not trying to mortgage this property in controversy in this case; I do not know anything about mortgaging any property. If there is anything of that kind going on I do not know anything at all about it. That question was never discussed in our

meetings; was never discussed at any time in our meetings, that I know of. Charles A. Hall, President of the Church, never claimed, that I know of, to have a revelation authorizing that property to be mortgaged; he did not so state, not that I know anything about, and I do not believe anybody made such a statement in our meetings, in the presence of Hall and myself. I say I do not know anything
756 about it. If that was ever done I do not recollect it; it was never so stated in the presence of Mrs. Haldeman, Franklin and Mrs. Franklin, Mrs. Hedrick and Alma Owens, for I do not know anything about any such arrangement. I swear that I do not recollect anything about it ever occurring in any of our meetings, and there never was any such a thing contemplated, that I know of.

I do not know anything about it if there was, and if the President of the Defendant church, C. A. Hall, has written any such a statement as that, to parties who were members of the Defendant church at any time, he did it without any authority from the church; he did it on his own resources.

I know a man by the name of Reynolds; he was a member of the Defendant church and an elder; he is not a member now, but whether he was disfellowshipped or has withdrawn, I do not know.
757 C. A. Hall, President of the Defendant church, never claimed to me that he had a revelation authorizing the mortgaging of the property in controversy. I am the trustee of this property in controversy; I hold it as trustee for the Church of Christ,—the Church of Christ organized the 6th day of April, 1830, of which Joseph Smith, Junior, the Seer, was the President. Yes, sir, he is the one who organized the church on the 6th day of April, 1830, as I understand it. We hold the property in trust for the church; we claim to be a part and parcel of that church, and hold this property in trust for that church, for the church that is in succession.

Of course I claim that we claim to be the original church, and we hold it for the church.

Q.—Is it not true that you claim, and hold, and have always so
758 claimed and held since you have been the trustee, to hold the property in trust for the legal succession of the church that was organized in 1830?

A.—In no other way have we held it than for the church, and we claim to be the church in legal succession from 1830 down to the present. We are holding it in trust for the church which is represented by us, and which we claim is the church that was organized by Joseph Smith, on the 6th day of April, 1830, as history records it. We claim to hold this property in that way, as being part and parcel of the church organized at that time

I do not remember that I said that the legal succession to the original church established in 1830 is the proper beneficiary of the property in controversy. I say that those who have held themselves
759 faithful in the doctrine and laws of the true church are the proper successors to the original church, and I say that they have a right

to the property. The ones who conducted themselves properly, and have not transgressed any law, are the proper ones, for they are the rightful possessors of the property.

Q.—If you knew that the Reorganized Church of Jesus Christ of Latter Day Saints was the proper and legal successor of the original church established in 1830, would you still decline to turn the property over?

A.—If it is necessary for me to answer that question I will answer it. I decline to answer it for the reason that I think I have answered enough. My powers as trustee are a matter of record. I do not know whose hands that record is in now; I suppose one of the members of the committee has them now. We pass them
760 around from time to time for convenience, and I cannot say where they are now.

I remember that the Plaintiff in this suit made a demand for the possession of the property in controversy in this suit prior to the time of the payment of a portion of these taxes of which I have testified as having paid; I remember that they served a notice on me at one time, but I do not remember what time it was, but it was some years ago.—I should say four or five years ago. I do not know that it was about the time we were fixing to build a house there; I remember that they served a notice, but I do not remember the date. E. L. Kelley was the man who read the notice to me, if I remember
761 right. I did not remember that at first, but I do now since you call my attention to it, that is the way it was. I do not remember whether the demand was recited in that notice to turn the property over to Bishop Blakeslee or not; I do not remember anything about it.

The geographical limits of what is known as the branch here at Independence, I think has a radius of five miles; that is its limits if I am not mistaken. I do not know when the limits were fixed, somewhere from three to five years ago, I think. I do not remember what the rule was in the church established in 1830; I do not remem-
762 ber whether there was any rule on that subject; I was not very familiar with the rules in the original church in relation to, or in respect to defining their limits.

No, sir, members of the church who lived outside of the five mile limit were not permitted to take part in the meetings, except by the courtesy of the branch here; that is, they were not permitted to vote in all of the meetings, but in some of them they were.

I cannot say how many of these high priests are outside of the five mile limit; Cole is, Alma Owens is outside of the five mile limit, but he is not a high priest. I cannot say how many of the elders are outside of the five mile limit.

Q.—Is it not a fact that the branch here at Independence, Missouri, has not to exceed fourteen members?

A.—I do not know; I cannot just remember off hand how many members there are; I would not know without taking the books and

counting them. I will not swear that there is more than eleven who belong to the branch here at Independence.

Of course all the members of the Defendant church believe in a prophet, as far as my understanding goes. If they do not they could
763 not belong to the church. The Defendant church believes in a prophet; they believe it is a good idea to have one in the church if they can get a genuine one.

I decline to answer that question whether we have a prophet or not, because I do not think it is necessary. We have no apostles, no sir, nor do we have anybody who claims to be a prophet as a member of the church. I do not know of any revelation being accepted by the church within the last fifteen years; I do not know of any being received by the members of the Defendant church; do not remember of any being presented to the church for acceptance. If there had been I might have known it, if I had been there at the time it was presented.

764 I attend church as regularly as I can. The church here at Independence has made no rule at all in the last two years with reference to the matter of dress; there have been exhortations on that question, but there has been no rule adopted; there has been no rule adopted on dress; that was merely a matter of exhortation and advice to the church, but there was not anything in the nature of a rule about it.

There has been no one disfellowshipped on account of their failure to observe the rule, so-called, on account of dress; no, sir, not on that account alone. That might have been part of the charge against them; that could be a part of the charge without being a
765 rule of the church, I think so. I think the charge against a member of the church could contain a specification on the matter of dress, although the matter of dress was not a rule of the church.

Q.—Then it is a fact that the Defendant church members can be charged with misdemeanors that are not against the rules of the church, and can be expelled from the church on that account?

A.—I do not think they can be expelled for that; I do not think that is so, but they can be charged with conduct that the church thinks is unbecoming if it is taken in connection with violations of specific rules of the church. While in itself this conduct would not cause them to be expelled, still it can be considered in connection with other offences against the rules of the church. They cannot be expelled unless there are rules to that effect governing the matter.

Q.—Well, if members have been expelled from the Defendant church where the charge has been disobeying the rule in regard to dress, it would be because the church had established such a rule, would it not?

A.—Well, not necessarily, it would be for that and other things, together; but for me to testify what it was in any individual case I could not do it, for I do not remember. I do not think Franklin and his wife were disfellowshipped for refusing to comply with that par-

ticular rule relating to dress and nothing else; I do not know whether that was the only thing specified in the charge or not; I do
766 not remember whether it was or not. I believe I was one of the judges of the trial court that tried Franklin and his wife, but I do not remember whether the charge was rebellion or not. I do not remember whether or not rebellion was the only charge; there might have been other things in it. I believe that was part of the charge.

All we did was to prescribe a rule under the name of "plain dress;" but as for the description or uniform pattern to be worn, that was not done. We did not go further and prescribe by rule a certain kind of cloth; but we did get samples and present them to
767 the members. There was no rule of the church that prescribed it; it was simply advisory; they were not to be forced to conform to any rule of dress unless they saw fit.

It is our business why we got the samples and presented them to the members; that is our business why we chose to do it. Mrs. Haldeman was not disfellowshipped; she withdrew, and was not disfellowshipped. I do not think she withdrew because she would not comply with the rules in relation to dress.

There are twelve or thirteen members here in the branch at Independence. I am not trustee in trust for any other property outside
768 of the property in controversy in this case. I am the sole trustee, I believe, and the sole Bishop of the Church.

I believe there is a law for the governing of property that comes into the hands of a Bishop for the church. I think there is a law on that subject, but I cannot bring my mind to just where it is so that I can say just where it is. There is some law in the Book of Doctrine and Covenants on that subject, but I do not know what it is
769 or where it is. I do not know whether that law is recorded or not, or at what time it was received.

There are some revelations there in the Book of Doctrine and Covenants that I do not have any use for. I cannot tell whether the one there with reference to the property in the hands of the Bishop is one of them or not, unless I know the date when that one was received; there are a good many that I do not hold to or recognize as authoritative.

I do not believe I can answer the question whether I was ordained a Bishop by any President of any church. I cannot answer it be-
770 cause I do not feel like answering it. I believe I was ordained by Frisbie, Cole, and Hall; I think that they did it, as near as I remember, but I am not real positive about it; if these parties did not ordain me I reckon I never was ordained.

I do not remember how the ordination was conducted; I do not just remember how long ago it was that I was ordained; I think about two years ago, or something like that. That is all the time that I have been Bishop of the Defendant church, two years or a lit-

tle over, two or three years, do not just remember how long it was. I was not the first Bishop of the church.

771 William Eaton he was Bishop before me, I think. I do not know who ordained him; I did not see him ordained, and consequently I do not know that he was the Bishop, but I will say that I understood that he was the Bishop of the church, and that he acted in that capacity for four or five years. I do not know who was the Bishop before him.

Granville Hedrick was the President of the church while Eaton was the Bishop. I do not know how many members were in the church at the time I was Bishop, I do not like to give my best judgment, because that would be guesswork. I cannot tell how many more there was in the church than there is now. There was not one hundred more, hardly fifty; maybe there was forty; there was several more than there is now, but I cannot say how many there was. My appointment of Bishop come about by simple vote of the church; I reckon it was by vote of the church; there might have been something like a revelation, but I do not know how that
772 was, I do not remember whether there was a revelation or not. I furnish some of the funds to defray the expenses of the Defendant church in this suit; the people, I expect, furnish some; I know that I do not furnish it all. I do not know that I can name any of the other parties who contributed towards the fund expended in defending this suit.

REDIRECT EXAMINATION.

We claim that we were members of the church that was organized in 1830, because of our belief in the doctrines that were taught in that church. We have a general organization here; it comprises the members of the church in different parts of the country, wherever they may be, it comprises the membership of the church in different places. There is a branch at
776 Bonner Springs, another in Indian Territory; then there are scattered members of the church around in different places, that belong to the general organization of the church; we have a local organization here at Independence. The local organization in 1830, was an organization of just a few members,—just a few people.

778 I did not mean to say in my cross-examination that I was Bishop of the church at Indian Territory, or at Bonner Springs. I am only the Bishop of the church here.

RECROSS-EXAMINATION.

There is a general organization of the Defendant church, and also a local organization; that is what I stated. I am not the trustee of the general organization. I do not know whether I was made the Bishop of the general organizaton or of the local organization; I cannot say as to that; that is a question I am unable to answer. I say I do not know how to answer that question.

I expect I am the Bishop of the general organization, and I expect I am the trustee of the general organization, too. I do not know of

any other officers of the general organization except the elders. There is myself and some of the members and elders that I named in my examination this morning, I know of no others. I reckon that the officers of the general organization are not the officers of the local organization. Cole belongs to the general organization, and he does not belong to the local organization. I do not know of any specified president of the general organization. I do not know how to answer the question as to how the general organization is made up; the members of the church constitute the general organization.

There are some members of the Defendant church outside of Jackson county, Missouri; there are some at Bonner Springs, I think
779 there are ten, eleven, or twelve, somewhere along there; I think so but I do not know just how many there are. There are some in the Indian Territory, I think there are nine or ten. The organization at Bonner Springs was effected two or three years ago, as well as I remember; it might have been in 1891, but I think it was before that, but I do not remember. That branch in the Indian Territory was organized about a year and a half or two years ago. I cannot state the county; I do not remember who is the President of that organization; I think his name is Clarke.

He is not the trustee; I think he is the President. I do not know that they have any trustee. I do not know who is the Bishop of that organization in the Indian Territory. I said I thought Clarke was the President if there was one at all; I think he is the presiding officer, but I may be mistaken about that. We have elders who have gone down there preaching, and they brought back reports, and we get information in that way. G. D. Cole reported, he was in the
780 Indian Territory preaching, he and Franklin might have been there at the same time, but I think they were not there together. If I understand it that branch is in what is called the Cherokee Nation; the members some of them are Indians, I do not know whether there are any Americans or not.

Yes, sir, the Defendant church has had General Conferences; they name their presiding officer when they come together. I believe I have been the presiding officer, or Mr. Hall has been the presiding officer; at different times. Mr. Hall was the presiding officer and in control this last spring when we held our conference, and last October, and in April, 1891. If being President of the branch here in Independence makes him president of the conferences, why he is the president, but the conference selects its presiding officer, and I think he was chosen because he was the president of this branch here. I am supposed to be the general Bishop of the church; there is no other Bishop but myself that I know anything about in the church, and there is no other President that I know anything about, except C. A. Hall.

I am the only Bishop in the church, and he is the only President that I know anything about.

I said in my redirect examination that I repudiated the general

organization of the original church after 1833, 1834, or 1835, but I do not think it went that length; that is not exactly what I meant to say; I meant to say that we repudiated the doctrine taught by the church in general; that is the way I meant to be understood as speaking. I do not know how you would blend it together, whether that would be repudiating the general organization or repudiating
781 the doctrine of the church that was taught in the church. I do not understand how you would combine that, but that is my understanding of it. I do not know how to explain it, but that is my understanding of it, however.

I was baptized in 1848, as near as I can remember, into the original church. I do not know that the elder who baptized me repudiated the doctrine of the original church. I did not repudiate the doctrine of the original church as early as 1850; I said that I repudiated certain doctrines that were taught after 1834; I cannot tell all of them. The elder who baptized me in 1848 taught me the first principles, faith, repentance, and baptism, that is what we call the first principles, and that is what he taught me.

I did not repudiate the Book of Mormon along with the rest that I repudiated; the Defendant church holds to the Book of Mormon
782 entirely, and to the Bible. We look to it and accept it as part of our faith. Yes, sir, the person who baptized me taught me when I was baptized that there was a prophet connected with the church. The man who baptized me was not a Baptist preacher that I know of; he
783 called himself an elder in the Church of Christ, or Church of Jesus Christ; I do not know that he called himself an elder in the Church of Jesus Christ of Latter Day Saints.

I will not swear that he did not call himself an elder in the Church of Jesus Christ of Latter Day Saints; I think there was a church at that time called the Church of Jesus Christ of Latter Day Saints. He was supposed to be an elder sent from General Conference on a mission.

I do not remember any conference in England; I did not stay there
784 long after I was baptized; came here in the fall of 1849. When I first came to this country I came to New Orleans, then went to St. Louis, from there I went to Wisconsin; lived there about twenty years as near as I remember it.

I was not connected with the church in Wisconsin; I was a member of the church that I had been baptized into; that was the church that was organized in 1830, I was a member of the church from the time I was baptized during all the time, but when I was living there in Wisconsin I did not identify myself with any particular branch or body of the church, nevertheless I counted myself a member of the church. I do not know where the church was at that time which was organized in 1830. The church was scattered all over in different places, that was my understanding of it.

I reckon I was a member of the church all the time, but I did not belong to any branch; I stated that I did not know where the church

was, but it was in different parts, scattered abroad, and I was not
785 attached to any particular branch of it. I do not claim that the church here in Independence is a general church.

Q.—Well, then, do you claim that it is a branch of the general church?

A.—Well, I cannot say; I do not know how to answer that question, and I do not know why as I know of. I understand that it is a part and parcel of the church that was organized in 1830, but I do not know how you would apply the connection between this and the original church. I know how we claim it; we claim that it is a part and parcel of the general church that was organized in 1830, but just how it is I cannot explain that. We call these ten, twelve, or thirteen members out here at Bonner Springs, just a branch, I believe, and we do not claim that the few members we have here in Independence constitutes the whole church, and it is probably a branch also. I really do not know what is the proper way to designate things, but that is probably so, and if the church here at Independence is a branch it was a branch before the organization of the branch down at Bonner Springs. I do not know what it was a branch of.

Q.—Was it not a branch of the original church, the original church established in 1830?

786 *A.*—Yes, sir, for if believing in the same doctrine would make it that, it would be called that. I reckon that is what it would be called. If we believe in the principles of the same doctrine that Joseph Smith taught in 1830, (and we claim to do that,) why then it might be called a branch of the church that was organized in 1830 by Joseph Smith the Seer; but as I said before, I do not know how to designate these terms.

Q.—I asked you if I understood you to say that the Defendant church; that is, the church here at Independence, of which you are a member and the Bishop, is a branch of the church organized in 1830, by Joseph Smith, and as a branch of that church accepts and believes in and teaches and practices the same tenets, doctrine, and beliefs, that were taught and practiced in the church established by Joseph Smith in 1830, the prophet and seer.

A.—Yes, sir, we believe in the doctrine that was taught in the church in the first two or three years after its organization; we believe in what it taught in the first two or three years after its existence, but we do not believe in all that it taught right along; we did not accept that, by any means.

I did not meet with any branch of the church in 1849; I met with members of the church as individuals in St. Louis; I do not remember what church they claimed to be members of, but I suppose it
787 was the Mormon Church. I did not repudiate the doctrine of the church at that time; I did a part after that, some of it. Now understand me, I do not repudiate the doctrine that was taught in 1830. I do not repudiate the doctrine that was taught in

1831, 1832, or 1833, but after that time there were doctrines introduced in the church which I repudiated.

Granville Hedrick was an elder in the church in 1842; I know that from reading about it; I do not know it personally. I do not think he was the first to repudiate some of these things. I do not know whether it was a Brighamite that baptized me in 1848 or not, he might have been for all I know.

I came to Missouri, from Wisconsin. I believe it was Independence that I first came to; came here because I wanted to, I reckon.
788 I did not know much about the history of the church in this country before I came. I had read the Book of Doctrine and Covenants before I came here, I read that after I came to this country.

I do not know that there was anything in the Book of Doctrine and Covenants with reference to property here in Jackson county that caused me or had anything to do with my coming here at the time I did. I read about it, but I do not know that it had any inducement towards making me come here.

I came here on account of a particular place spoken of in the Book of Doctrine and Covenants, that is what brought me here, and it was with reference to that particular spot of ground that was claimed by the original church. I did not come here because of any special temporal benefit I expected to receive, but on account of the teaching I had been taught to gather here in this country. We called it "gathering to Zion." I got that information partly from the Book of Doctrine and Covenants, and partly from having it preached to me, and other information that was taught and preached to me by members of the original church. The Saints were to gather here in Independence, or Zion, as it is called. I had read the revelation in the Book
789 of Doctrine and Covenants with reference to the Temple Property here in Independence, given in July, 1831, with reference to certain Temple Property here in Jackson county, Independence.

When I came here I went and tried to find that particular property, and it was here plain enough to be seen. I did not have to try and find it, for it was here plain enough to be seen, and it was no particular trouble to find it. I found the Temple Property myself; came right by it when I came up from the depot. I knew it in various ways; I knew it by seeing it and examining it for myself, and other ways.

That Temple Property is the same property on which we have our church building now; that is the same place. It was known as the Temple Lot when I came here in 1868, and was pointed out to me as the Temple Lot; has been known by that name ever since 1868, ever since I have been here. It has been known by that name and by no other name by people speaking of it, and they invariably refer to it as the Temple Lot, ever since I have been here. I do not know how long before I came here I heard of the Temple Lot; it would be sev-
790 eral years ago, anyway. The headquarters of the Defendant church is wherever they have a mind to place it from time to time. I reckon

I do not know where the general headquarters of the Defendant church is now; it does not have any headquarters that I know of.

I do not know who is the Bishop of the Church at Bonner Springs; I do not know of any. I do not know of any Bishop of the Church
791 in Indian Territory. I am the trustee of the property here in Independence; I do not claim to be the trustee of anything else. I do not know of any other property belonging to the church. I said that I accepted and believed the revelations in the Doctrine and Covenants that were given from 1829 to 1833, and possibly 1834. I cannot state what ones I believe in and what ones I do not believe in, but there are a good many that I do not exactly believe in.

Q.—I understand you to say that the Hedrickite Church repudiated some of the revelations; in fact, all of them that were given subsequent to 1834, and that is the point at which they split from the rest of the believers in Joseph Smith; now, is that right?

A.—Not exactly. I cannot state what revelations given prior to 1833 that we do not believe in; there are one or two that we do not
792 know whether they are true, or not true, and we neither accept nor reject them. I cannot tell what they are, nor the date of them, nor what they refer to. No, sir, I cannot tell what the revelations refer to, or the dates at which they were given, that we reject that were given prior to 1833; I cannot do it now; they are in the Book of Doctrine and Covenants. I do not understand that we repudiated the revelations that were given prior to 1833, at all; we think they are liable to criticism, and we look upon them with suspicion. Those that were given after that time we do not understand, and we just took them at what they were worth, not rejecting or accepting them; we did not take them as correct or as false.

793 All these revelations with reference to Zion I believe in them and accept them as correct, but I give them a qualified approval by way of accepting them. I believe them like this, as far as I understand them. I did not claim to have a correct understanding of all then, and I do not claim to have a correct understanding now.

Yes, sir, there is one thing that I did understand, and that is that this place here was appointed as a gathering place for the Saints. We believe that revelation, and we understood that revelation and believed it. That revelation speaks of a gathering place for the Saints, and a place for the erection of the Temple, and we believe that, of course; believe that it came as a divine revelation from God.

Certainly, we do, and through Joseph Smith the prophet and seer; and when that revelation says that the place for the Temple is westward from the courthouse, I understand by it just what it says,—that that was the place selected by God and designated by him through the revelation given through Joseph Smith as the place for the Temple.

When I came here I do not know that I was terribly anxious to see the place that was supposed to be the Temple Lot. I probably had some curiosity to see it. I had some curiosity to see it. I had

curiosity enough to find out and look up the particular spot of ground which had been designated by God Almighty as the place for the erection of the Temple.

---

794 WILLIAM R. WILSON, of lawful age, being produced, sworn, and examined on the part of the Defendants, testified as follows:—

I reside in Independence, Jackson county, Missouri. Have lived here off and on nearly all my life. Am fifty-six years of age. I was not born here, but I was quite young when I came here; I was three years old when I came here. I lived down by Waggoner's Mill; that is situated on Spring Street, east of the Westport road. Where we lived is east of the Missouri Pacific depot yards, about a quarter of a mile, probably a little over a quarter of a mile from the depot yards, east. I know where Nebraska Street is in this city, and Union Street, and where the main line of the Missouri Pacific Railroad is. The old Woodson place was down near where we lived, down by the mill. Woodson's place would be south of Walnut Street, and his residence was west of Pleasant Street; I guess about three hundred and fifty yards west of Pleasant Street, and south of Walnut Street probably, a quarter of a mile, and east of Mr. Chrisman's pasture about two hundred yards. Where the Woodson ground was inclosed, that inclosure run west and south of Walnut Street; it would go over to the old Westport road.

I cannot say when it was inclosed. I was twelve or thirteen years old when I first knew it to be inclosed. I was about twelve years old when I first came here to this county. We moved up to High Grove place when we first came here, and from there down here to this place near the mill; then we moved back again; we did not live down here at first. When I went to school here I found it inclosed, and I went to school in 1846, 1847, and 1848. I know where the Woodson and Maxwell addition is, yes, sir.

I do not know whether anyone lived on the Woodson and Maxwell addition prior to the war or not. I knew of several persons who lived there on the corner where Warnky's house is; a man by the name of Dunn lived there; it was on the corner of Lexington and
800 Union Streets. I do not know whether Nebraska Street was ever called Union Street or not. I do not know of anybody else who lived in there at that time or early after the war. There were parties in there, but I do not know the names of the parties. People began to settle in there since the war.

CROSS-EXAMINATION.

I said I had been here in this county ever since I was two or three years old; moved from Clay county over on this side of the river when I was three years old. I am fifty-six years old now; have been in this county fifty-three years; that would bring me here in 1839. I remember hearing something said here about that time about the Mormons and their having been driven away from here; I certainly

801 did; there was considerable talk here about that occurrence. I heard about the Temple Property at that time; knew where it was located at that time; have known where it was located ever since I was big enough to know anything.

It has always been called the Temple Lot ever since I have been here. If anybody had come to me during any of the time that I have lived here and asked me to point out the Temple Lot I could have done it. I should have gone out here by the Mormon church and pointed out that lot across the street that is inclosed.

I know the church or building I think that you mean, but I do not know who it belongs to; it is there in the lot that we call the Temple Lot. If anybody, any stranger or other person had come to me and wanted to see the Temple Lot or sacred spot that was designated for the Temple, I would have shown them that piece of ground that is inclosed down here, and has that little church building on it. I have showed it to people a great many times. I have shown that lot to a great many people as the Temple Lot, and told them that it was the Temple Lot. I do not know that I could point out the boundaries, except it was known as the Temple Property.

Everybody knew it by that name, and pointed it out as the Temple Property; but at the same time, while I knew it was the Temple Property I do not know that I could have gone to work and pointed out its exact boundaries. I know though that it has been known as the Temple Lot, ever since I have been here. That piece of ground that has the little church building on it, has always been called the Temple Lot ever since I have been big enough to know anything; I remember that right well.

RE-EXAMINATION.

Yes, sir, I would have been able to designate that particular spot of ground as the Temple Lot at the time, before there were any streets laid out or opened up through there.

Yes, sir, I could have gone on that ground without any trouble, but I could not have given any boundary to it. There were no streets
802 laid off there when I first knew it, nothing but the road; we called them roads then.

I do not know just exactly how far this ground that is fenced now extended west, or how far it came east; but I remember, I know right well, that on that point of land there along the Westport road, and right across the street from where the Mormon stone church is now, and that point of land there was always known and called the Temple Lot. I know that right well, for that was always designated as the Temple Lot.

I do not know how far it extended south; there was nothing marking the boundaries. The Westport road would mark the boundary on the north. I do not know anything about how many acres there was, or anything of the kind. I just know what has always been called the Temple Lot since I have been here. Everybody knew that it was the sacred spot that was to be the place for the Temple.

RECROSS-EXAMINATION.

Yes, sir, it is true that that particular spot of ground called the Temple Property slopes in every direction of the compass, and the highest point on the lot is designated on the map, and I could tell when I was on the highest point.

---

803 JOHN H. TAYLOR, of lawful age, being produced, sworn, and examined on the part of the Defendants, testified as follows:—

I have lived here in Independence since 1851, except for some years since that time I have been away. I recognize the map which you hand me as indicating the boundaries around Independence. I recognize the property within the blue lines. Mr. Woodson lived there about Pleasant Street; that would not be in the blue lines on the map. I think this was all vacant property until Woodson and Waxwell's addition was laid off; this colored pink and that inclosed by the blue lines was vacant property. Yes, sir, all that was vacant property; I mean that from Walnut Street up north to the Westport road. It was what we called the Temple Lot, and the Westport road was the western line of it, and the western line of the Wood-
804 son pasture. I know there was something of a fence along Walnut Street, beginning at the Westport road. Walnut Street as well as I can remember run down to Woodson's pasture on the north, and a stone wall bounded the pasture on the west; on the east there was a kind of a fence that separated it from his lot.

CROSS-EXAMINATION.

805 I was well acquainted with Colonel Woodson, and know the property we are talking about; have known it ever since I have been here; do not know that I ever heard Woodson speak especially about the Temple Lot; I suppose the street there adjoining was called Temple Street on account of its being the temple property.

I have known of its being called the Temple Property ever since I came here, I do not know how much there was of it that was called the Temple Property, but it was that open space in there that is now called the Temple Lot. I do not know how much there was of it, I think that was all that was called the Temple Property at that time, but I understood that originally there was a good deal more of it.

It is the vacant ground that lies within the blue lines on the map and outside of the part that is inclosed, the highest ground there is called the Temple Lot; it is inclosed now. I cannot say that every-
806 body in the neighborhood knew it, but it was generally known as that, and if anybody would speak of it they would generally speak of it as the Temple Lot.

Yes, sir, ever since I can remember it has been called that. Woodson and Maxwell's addition was laid off after that, and a part of it was still called the Temple Lot. Yes, sir, the people continued to

call it the Temple Lot after the addition was laid off there, I think that that high ground has been called the Temple Lot by almost everybody here, for that is the place where the Mormon people expected the Temple and the gathering to be.

RE-EXAMINATION.

It was called the Temple Lot because it was understood that the Mormons claimed the ground and they expected to return here and build a magnificent temple on the ground, and that that place would be the place of ascension on the last day.

Defendants now offer a copy of a deed of trust from S. H. Woodson to Abram Comingo, trustee, which is marked Exhibit "147."

To which Plaintiff objects on the ground that it is irrelevant, immaterial, and incompetent, and for the further reason that the description of the land sought to be conveyed thereby is void for uncertainty and does not describe any of the land in controversy in this suit, or any land adjoining the property in controversy in this suit.

Defendants now offer in evidence a copy of deed of trusteee A. Comingo to William Chrisman, which is marked Exhibit "145," to the introduction of which Plaintiff makes the same objection as to Exhibit "147."

Defendants now offer in evidence a deed from William Chrisman and wife to John P. St. John, marked Exhibit "150."

This is objected to for the same reasons as noted in the objections to Exhibits "145," and "147," and for the further reason that the deed is not acknowledged as required by law.

Defendants now offer in evidence copy of power of attorney from Samuel H. Woodson and wife to William Chrisman, marked Exhibit "146."

Plaintiff objects to Exhibit "146," for the same reasons as before stated and for the additional reason that the power of attorney is not acknowledged as required by law.

Defendants now offer in evidence copy of a deed from William Chrisman and wife to St. John and Dawson, marked Exhibit "149."

To which the Plaintiff objects for the same reasons as noted to Exhibits "146," "150," and "147," and the further reason that it is not acknowledged as required by law.

---

807 E. L. KELLEY, of lawful age, being produced, sworn, and examined on the part of the Defendants, testified as follows:—

I do not remember that I know anything about the original deed of which Exhibit "148," purports to be a copy, and yet I may possibly have the original of that deed in my possession. I have the original of the one from Mr. Luff to the Reorganized Church in which he conveys the same property, but I cannot say positively that I have or have not the original of the deed that you ask me about.

The deed from Luff, to the Reorganized Church purports to convey Lot Twenty-three in Woodson and Maxwell's addition in the city of Independence, lying east of Grand Avenue Street.

Plaintiff objects to the answer of the witness, and moves the Court to exclude it from the record as not the best evidence.

I am acquainted with the property that it purports to convey, I think I know the piece of ground. It is a three-cornered piece, (in here,) marked in pink and lying west across the alley from the property in dispute in this case.

There is an alley shown on the map here, I cannot say of my own
808 knowledge that there is an alley, but it so appears here on the map. I know what was done, and how it was done, in the purchase of this property by reason of the fact that I was counselor to the Bishop at the time.

It was bought under a mistaken idea upon a telegram sent by Joseph Luff to Bishop Blakeslee, and the statement was made that the Bishop must answer at once, and it was bought before the consultation could take place with me.

It was, as I thought, an error on the part of the Bishop and we have so recognized it always, but we have performed our part of the contract nevertheless;—notwithstanding the error we have stood by
809 our contract, and performed our part of it. We claim that it is property belonging to the church, that it is properly the property of the church, but it is no part of the property in controversy in this suit.

I cannot say whether it was before claimed as a part of the original Temple Lot, there has been no declaration made upon that subject by the body. I will say this, however, that it might be so claimed as a part of the original Temple Lot, and again it might not; the church has never made any declaration in reference to it that I am aware of.

We claim the property as church property, that is the church claims it as church property which it has bought and paid for with its money.

Now you can take that as a claim to it as a part of the Temple Property if you wish to do so, for I only state what I know about it. I made claim to the other personally myself as the attorney and agent for the Bishop of the Church, that was before I was the Bishop. I made the claim for these other lots that is the lots in controversy in this suit, and I made the claim under the direction of the church.

Yes, sir, we have the same claim to the title to Lot Twenty-three
810 under what we claim as an original title that we have to the other lots. And besides that we purchased it to avoid litigation, and I will say right here that we would have been willing, to remunerate these Defendants at any time, and have so stated to them, for any reasonable amount, for what they expended, and we were willing to do that not because we did not think we had title and right to it, but for the purpose of effecting a peaceable settlement.

We have not only tendered but stand ready to do so, and have all the time stood ready to compensate them, to do justice to these other parties and pay them back the money if any expended on account of it for taxes, purchase money, or anything else.

The deed from Thomas H. Swope to Joseph Luff, is objected to by the Plaintiff as immaterial, and because it describes no part of the land or property in controversy.

"It is admitted that the Plaintiff holds the title to the property upon which the stone church in the City of Independence, Missouri, is located, for the local church of the Plaintiff at Independence, and that it has a seating capacity of one thousand persons."

---

811 JOSIAH W. SWEARINGEN, of lawful age, being produced, sworn, and examined on the part of the Defendants, testified as follows:—

I am deputy clerk of the County Court, have been deputy clerk of the County Courty twenty-seven years with the exception of about six years. I am acquainted with the records of the County Court.

812 The tax books of the county are deposited in our office, the assessor's books or the collector's books, I mean the collector's books. There are no tax books of this county on file prior to the year 1860.

"Defendants offer a copy of the tax records of Jackson county, Missouri, with reference to the land in controversy, for the years from 1860, up to the present time, marked Exhibit '160.'"

Plaintiff objects to the introduction of the tax records for the reason that the same are immaterial, irrelevant, and incompetent, and not proper evidence, and no evidence at all upon any matter in controversy in this case.

PLAINTIFF'S EVIDENCE IN REBUTTAL.

1 JOHN HAWLEY, of lawful age, being produced, sworn, and examined on the part of the Plaintiff in rebuttal, testified as follows:—

I was sixty-six years old the fourth day of last March. I reside at Sheridan, Worth County, Missouri.

I am a member of the Reorganized Church of Jesus Christ of Latter Day Saints. I was baptized by Wm. O. Clark in the year 1837 into the church of which I am now a member. William O. Clark was an elder in the church at the time I was baptized. I was baptized in Ray county, Missouri. There was a branch of the church close to where I lived at that time.

2 I was ordained a teacher in the church about 1842 at a place called Ambrosia, in Lee county, Iowa, about four miles from Montrose. There was an organization of the church at that place. That branch of the church at Ambrosia was presided over by John Smith, who was a cousin I think of the first Joseph Smith. I think that was the

way it was, but I would not swear positively to that. That organization continued there at Ambrosia until 1843, and from there it was moved to what was called Zarahemlah, close to Montrose in Iowa.

3 I pursued my occupation as a teacher for six or seven years and then I received a higher ordination as an elder. I was ordained an elder in Texas; disremember the county, but it was about the central part of the State, about eighty miles from the Capital, and about sixty-five miles from San Antonio. There was an organization of the church there of which Lyman Wight was the head. Lyman Wight was one of the Twelve Apostles in the original church,—one of the original Twelve. He became one of the Twelve to fill a vacancy in old Joseph's day.

I remained in Texas until about 1853, and during my stay there, the organization was kept up. When I left Texas, I came to the Cherokee Nation and wintered there in 1853. Remained there until 1856 and then went to Utah.

I remember the time and the circumstances attending the death of Joseph Smith the Martyr. I was in Wisconsin at the time.

My father went to Wisconsin in company with Lyman Wight, and George Miller, and others for the purpose of obtaining lumber for finishing the Temple at Nauvoo. I was in Wisconsin on this lumber
4 expedition at the time I heard of the death of Joseph Smith.

That did not deter us, we went right ahead and finished our labors and brought the lumber down the next spring after the death of Joseph Smith; that would be in the spring of 1845. In the summer of 1845, we went back to Wisconsin.

I was acquainted with the requirements of the church at that time and its doctrines, as much so as anyone of my age was at that time. I was acquainted with the teaching of the church and the requirements of its officers.

There were no teachings of the church, nor requirements with reference to the question of endowments at the time that I was an officer in it. There was no teaching of endowments to my knowledge at any time until after we went into Texas. That was the first time I ever knew anything about endowments.

Lyman Wight was the first person that taught anything about
5 endowments according to my best recollection. He taught us that it was necessary for men and women to be sealed together in order to enjoy each other's society in eternity.

That is, he taught that husband and wife were to be sealed together in order to enjoy each other's society in eternity. Lyman Wight was the first person I ever heard teach that doctrine.

There was no particular difference between that sealing and the ordinary ceremony of marriage, except it was done as we understood it by the power of the priesthood.

It was used instead of the legal form of marriage and at that time we looked upon it as being more binding for eternity than the other form of marriage. One was performed through the requirements of

the law of the land; and the other through the requirements of the spiritual law. That was the understanding we had.

I passed through that ceremony myself. I was married in 1851.

Lyman Wight became the head of the church there in Texas from the fact as we understood it that he had a mission given him by Joseph Smith the Seer, to go to Texas and preach the gospel to that people, and raise up a branch of the church there.

That appointment was made in 1843. At least that was the time that Lyman Wight received his commission to go into Texas. That was the statement he made to us at the time. He made the statement to us that his commission was given him in 1843.

I do not know that I could enumerate all of the Twelve, at the time Lyman Wight went into Texas, but there was Brigham Young, Heber C. Kimball, Willard Richards, George A. Smith, Wilford Woodruff, Orson Hyde, William Smith, Orson and Parley P. Pratt.

In 1844 the Twelve were scattered throughout a good deal of territory. In 1848 they were scattered a good deal more, but the most of them I think were in Utah. Most of them had gone to Utah with the branch of the church that went there.

6 I don't believe I can state how many of the Twelve went to Salt Lake City, but there was quite a large number of them, quite a large number of that branch of the church, and some of the Twelve went with them of course. I think most of the Twelve went to Salt Lake City with the exception of William Smith, Lyman Wight, and John E. Page.

I went to Salt Lake City in 1856, from the Indian Territory. I identified myself with the church there in Salt Lake, as did my wife.

I took the endowments there. The endowments that I took at Salt Lake were not the same endowments that I took under Lyman Wight's administration. They differed in the manner of the sealing, and in the manner of conferring the endowments.

7 Lyman Wight only gave the endowments in respect to the matter of the washing of the feet, and (in Utah) they gave the endowments of washing and anointing, and then there was an oath taken in Utah to avenge the blood of the prophet. That was a part of the endowment that was given in Salt Lake City.

The endowments in Salt Lake City were given in the endowment house as they called it, which was arranged especially for conferring these ceremonies, reserved entirely for that service.

The endowments that Lyman Wight gave us were the washing of feet, and sealing a man's wife to him for eternity. I can't repeat that ceremony, but it was sealing in the name of the Lord Jesus Christ, for time as well as eternity.

There were no other obligations than that, nothing more than sealing for time and eternity, that was all there was to it. It related purely to matrimonial affairs and that was all the endowments that Lyman Wight ever gave.

In 1848 was the first time I ever heard of endowments being given in the church. That was after the death of Joseph Smith certainly, because he died in 1844. At the time I lived at Nauvoo, I did not hear or know anything about endowments.

I never heard of it at the time I was a resident of Nauvoo, or before the time that I was in Texas under Lyman Wight, no further than I heard that there was an endowment of the Spirit at Kirtland. That was in 1833 as I understand it, but I had never heard anything about endowments in Nauvoo.

The endowment at Kirtland was the washing of feet and the endowment with power, that the elders might go forth with greater power to preach the word. That endowment was given to the elders through the Holy Spirit.

After that, the next I heard of endowments was from Lyman Wight in Texas, where it was applied to the marriage relation.

And after that, I went to Salt Lake City, Utah, and there I found the ordinance, as it is called, of endowments, in force, only with a greatly extended application.

The endowments that I received in Texas were not conferred secretly. There was nothing secret about it. They were conducted openly and all had the privilege of seeing them performed. Everyone could go that felt like going.

That was not the case in Salt Lake. In Salt Lake City it was
8 done secretly and no one was permitted to see them only the officers and the ones taking the endowments. No one else was present or permitted to be present simply because no one else had any business there and they were not permitted to be there. That was the reason there was no one else there.

That was the rule at the time I received my endowments at Salt Lake City at least. Of course I don't know what happened afterwards.

Wilford Woodruff did the anointing and washing and Brigham Young did the sealing at the time I received my endowments at Salt Lake City.

At the time I received my endowments in Texas, Lyman Wight did the sealing and my father was a high priest in the church in old Joseph's time and he did the washing of the feet and the anointing of the head.

When my wife and I received our endowments in Salt Lake City, we were in different rooms while we were washing and anointing, but when we were sealed, we were together.

In Texas when we received our endowments, we were not separated at all, it was simply the washing of the feet there.

My father's name was Pierce Hawley. I have attended church at Nauvoo many a time. My father lived near Montrose, that was across the river in Iowa, and we often went over on the Sabbath to Nauvoo, and attended church.

At the time I attended church at Nauvoo and while I was a teacher

in the church there, there was no such thing then taught, or practiced, as endowments or any endowments that I have spoken of.

9 I heard nothing of that kind at all there at Nauvoo. That was from 1841 to 1844 that we attended church services or meetings there at Nauvoo. It was while we lived across the river at Montrose.

If there was ever any such a thing as endowments practiced in the church at Nauvoo, during this period from 1841 to 1844, I never knew it and I don't think there was. It was in 1848 when I first heard of it.

I knew something about what went on in Salt Lake City, after I got there of course, with reference to the endowments. There was such a thing known as endowments being administered to those who had not been joined in marriage as husband and wife.

There were several single men went through and got their endowments,—unmarried men. Of course they did not receive the ordinance of sealing for eternity. That ordinance was not administered to them.

They were anointed and when they got their wives, if they ever did get any, they then got the rest of the endowments. That was the way it was done in Utah. That was never practiced in Texas, with reference to single men, to my knowledge. In Texas it was confined exclusively to husband and wife.

I went to Utah in 1856 and remained there until 1870.

10 The first indications that ever came to my knowledge that polygamy was being practiced in the Mormon Church was in 1845 in Wisconsin after we went to Wisconsin the second time from Nauvoo. That was where I first heard of polygamy or plurality of wives. It was at Prairie Lacrosse.

There was a church organization there at that time. Lyman Wight was there with his little band. He was the head of the organization of the church there at that time. Lyman Wight went from Wisconsin to Texas and his organization went with him, most of them did.

I first heard of the practice of polygamy when I was just starting for Texas in the summer of 1845 and we were on the move for Texas. Lyman Wight had performed the ceremony and had sealed a young lady, near us, to a man who had another wife. He had just done it a short time before we started. I know this is so for at the time I was paying my regards to the young lady myself and I didn't know for some time that she was another man's wife.

When we got to Davenport, Iowa, was where I came into possession of the knowledge that she was another man's wife, and of course I dropped her mighty quick. That was the first intimation that I had that there was anything of the kind practiced. That was the first case of spiritual marriage that ever came to my knowledge.

Spiritual wife marriage as it is termed. Those that were in spiritual marriage were said to be in polygamy, as well as those that were not. The understanding was that they would enjoy the same

glory as the others, but the ones that had more than one wife would enjoy a greater portion of it.

It was not a necessary and logical sequence if they were spiritually married that they would practice polygamy. The theory was that the man that had more than one spiritual wife, would enjoy a greater measure of glory than the man that had only one, enjoy the glory hereafter; the glory which was in eternity would be greater. I mean that that would be applicable if they practiced polygamy.

11 Lyman Wight taught that in Texas, and practiced it there. According to my understanding, Lyman Wight was the first man to teach and practice polygamy in the Mormon Church.

I was pretty well acquainted with Joseph Smith the Seer, from 1838 to 1843. I was pretty well acquainted with him during all that time. I was ordained a teacher in 1842 and if polygamy had been taught or practiced in the church at that time at Nauvoo or anywhere else, I think I should have heard of it.

I have my reasons for thinking so and they are these: My father was one of the first elders in the church, and if he had heard of any such thing, I think he would have said something about it, and we would all have heard about it; but I didn't hear of it. That is, of the teaching and practice of polygamy prior to the death of Joseph Smith.

I never knew of Joseph Smith teaching or preaching or practicing polygamy. The first time I heard of it was in 1845, and I never heard of it before that time from anybody.

Q.—I now hand you Plaintiff's Exhibit D, on the title page of which appears the following: "A few choice examples of Mormon practices and sermons," and I will ask you whether or not you rec-
12 ognize the cuts of the garments and implements contained within the first eight pages as being of the character and description used in the ordinances of the endowments at the time you took them at Salt Lake?

A.—I have not used them or seen them since 1870, but I recognize this garment on the front page here as being the complete garment with sleeves and dress and all as being the same as the garment used at Salt Lake, at the time I received my endowments. I recognize the aprons and the emblems on the aprons as shown on page two of Exhibit "D." I remember the leaves there on the apron and the form of the apron, I remember that very well. That was the form of the apron worn and used at the time of the endowments at Salt Lake. The apron is used at the time of the sealing,—that particular stage of the proceedings.

I don't know that I can recognize the building with all its compartments and forms, but still I remember it had a good many departments. It had a reception room, a small stairway to the veil, and it was pretty much all on the ground floor. Had dressing rooms, washing rooms, a prayer circle, and an altar.

This square room here marked "Peter," "John," "James," "altar,"

and "world" is intended to represent the three apostles, Peter, John, and James. It represented the Melchizedekal priesthood that they held. The Garden of Eden part of it was more fully practiced and carried out when I received my endowments.

When I received mine there was only an offering made and the ones it was offered to would receive it, and we expected that for
13 accepting it, they would be cast out as a representation of the truth. I mean the ones that would accept the fruit that would be offered to them would be cast out the same as Adam was.

We expected that the man would be cast out and then you would go out with your wife. Then there was another room which was entitled "heaven."

There was an altar where we were all sealed for time and eternity, the jumping off place, so to speak; that is what they called it. That was the last room and was the last act in the ceremony.

The room below it in the diagram where the square and compass is marked and is designated "instruction room," the name indicates what it was. It was a room where we received general instruction. The instruction related to garments and robes and teaching people how to wear them.

The undergarment to be worn continually and the robe that was worn at the time of the prayer circle was to be the same in which you were to be buried. If you died, you were to be buried in a robe like the one you wore at the time you were sealed.

I recognize the drawing on page six of Exhibit "D" as the robe that was worn on that occasion. I remember the bows on the side. It was a robe that came down over our shoulders and had a bandage across. That was a robe that was worn outside of the garments.

I recognize the representations on page seven of Exhibit "D" as the woman's cap and moccasins and the man's cap. I recognize them as part of the paraphernalia that was used on that occasion. These were used at the time of the sealing.

I left Salt Lake in 1870. During the time I was there, I was a
14 member of the church in Utah. Was not a member of any other church during the time I was there. I am now a member of the Church of Christ denominated the Reorganized Church.

The Reorganized Church does not have any endowments of the kind I have mentioned. If they have, I never have seen them or heard of them. They teach nothing of the kind.

In taking the endowments at Salt Lake there was an oath required, and the oath that was required was to avenge the blood or death of the prophet.

No such an oath was required in the administration of the endowments under Lyman Wight. There was nothing of that kind required.

I severed my connection with the Mormon Church in Utah in 1870 and that is the year that I came away from there. The occasion for my severance from that organization was, that the doctrine taught there

was not in keeping with that which is written in the inspired books, the Bible, the Book of Mormon, and the Book of Doctrine and Covenants.

I left because the doctrine and teaching of the church in Utah did not conform to the teaching set forth in the books of the church acknowledged to be inspired.

I think the doctrines of the church were presented there in Utah about the same when I came away as when I went there. There was one doctrine and that was about Adam being our God. I can't say about when that was introduced. That was a doctrine that I never agreed
15 to and couldn't understand for the reason that I couldn't understand how he could be our God, and have fallen under condemnation the way he did, but however that was, Brigham Young sent a proclamation to that effect to the people, but whether it was in '52 or '54 or 56, I couldn't say; but at any rate, I objected to that doctrine and would not accept it.

And polygamy was another doctrine. I was baptized after I went to Salt Lake City. The occasion of being rebaptized after I went to Salt Lake City was, it was supposed that the people in crossing the plains at that time, would naturally commit sins, and it was considered beneficial to be rebaptized.

At the time I took my endowments in Salt Lake City, I don't remember of taking any oath except for avenging the death of Joseph the martyr and his brother Hyrum Smith. I find here in the Exhibit to which my attention is called, that we are to teach
16 our children to do likewise. Now it might have been all in there at the time I took it, but I don't remember it if it was.

I am satisfied from what I had heard before I took my endowments that there were many things done in the endowment house that were not done at the time I received mine.

I recognize the oath that I took here in Exhibit "D," but I can't say that I took it all. I recognize parts of it all right though. We were made to swear to avenge the death of Joseph Smith the martyr, together with that of his brother Hyrum, on this American nation, and that we would teach our children and childrens' children to do so. The penalty for this grip and oath was disembowelment.

CROSS-EXAMINATION.

I became a member of the Plaintiff church in this case in 1870, in Utah, and I left Utah in the fall of the same year. It was probably about four months after I became a member of the Plaintiff church, before I left Salt Lake City.

17 After I left Utah, I went to Shelby county, Iowa. Stayed there eighteen or nineteen years. Was a member of the Plaintiff church there. I lived at Galland's Grove in Shelby county, Iowa. I left there when I moved into Missouri about four years ago. There is a branch of the Plaintiff church where I now live in Worth county, Missouri, of which I am a member,—the branch of "Sweet Home."

I came here to Independence yesterday evening on the application of E. L. Kelley. He requested me to come.

At the time I took my endowments at Salt Lake everybody was excluded except the ones taking endowments and those who were officiating in the ceremonies. I belonged to and was baptized into the original church that was organized April 6, 1830.

I was directed not to disclose the method of the endowments. I I agreed not to do so in certain places. One of the places where I could divulge the endowments, was not in a court room where depositions were being taken.

18 I would not have discussed the methods of these endowments when I was a member of the Utah Church. The penalty for revealing or disclosing these secrets was disembowelment.

The grips and tokens of the priesthood were what we were not to disclose. When I took the endowments I took this oath. All who took the endowments took the same oath. I didn't make any halves of anything in this business; I generally saw the whole thing through, and therefore I say I took that oath, the whole thing; and I kept the obligations while I was living in Salt Lake City.

19 There is nothing to compel me to divulge anything. I don't recognize any obligations to disclose anything at all; there was nothing said about it, and I have not disclosed the grips nor the tokens; and that is what we were not to disclose.

I did not know that the church at the time I took these endowments practiced polygamy. I heard it did and I suppose as a matter of fact it did. I have no reason to doubt it. The greater part of the membership of the Utah Church did not practice polygamy, nothing like the greater portion of them. I was acquainted with some people who did practice polygamy, and was acquainted with a great many men that they said had more wives than one. I can't tell you the number.

20 I objected to the practice of polygamy then, never liked or approved of the idea that it was practiced, and that was the main reason that I left the church. I objected to the practice of it all the way through, in every way.

From what was written in the standard books of the church, I saw that it was condemned by these standard books and therefore I did not approve of it and I objected to it for that reason, and, because I considered it did not tend to good morals.

I received my first lesson in polygamy in Texas. Aside from the lesson I mentioned in my examination in chief, which I received in Wisconsin, or on the road from Wisconsin to Davenport.

22 I knew a man by the name of George Miller while I was in Wisconsin. He didn't practice polygamy at that time that I am aware of. But afterwards while in Texas he did. This man Miller joined the branch in Texas of which I was a member.

I understood that George Miller and Lyman Wight had received their instructions to go on this mission to Texas from Joseph Smith.

That is what I understood, I don't know anything about it. That is what they said. The instructions were that George Miller and Lyman Wight were to take the Black River Country and take a mission there, and afterwards it was changed to Texas and we were all coupled together to go on that mission.

24 I said that the endowments given at Salt Lake were not like those that Lyman Wight gave, and I haven't seen anything like them since I left Salt Lake.

I have been taught since I left Salt Lake that all these things that lead to polygamy and these things that are not in keeping with the law, are not of God. That is what I have been taught.

I have never received any endowments with reference to feet washings since I left Salt Lake. I don't know anything about endowments in the Plaintiff church, except endowments of the Spirit, that is all.

26 I have been baptized three times. I was baptized into the Reorganized Church of Jesus Christ of Latter Day Saints in Utah before I left there; and have never been baptized since. That is the baptism that I was received upon. I was baptized into the Utah Church in the Indian Territory, and then I was baptized again when I got to Utah. I was baptized originally in 1837 in Ray county, Missouri. I was baptized in the Cherokee Nation by an elder in the Utah Church, by the name of Miller.

I don't know that I could explain the reason why it was necessary for me to be rebaptized into the Reorganized Church of Jesus Christ of Latter Day Saints, any more than it seemed to be a practice among the people.

Those that had been baptized into the Utah Church were rebaptized before they were admitted into the Reorganization. But I understand that that is not necessary in the case of parties who were baptized into the original church before the death of Joseph Smith, and who had never become identified with the Utah Church, or any other faction of the original church after the death of Joseph Smith. That is my understanding. The church in Salt Lake or Utah was called by a good many the Brighamite Church, or the Utah Church, and of course was called the Church of Jesus Christ of Latter Day Saints also.

28 I suppose the reason I was baptized into the Utah Church, or the Salt Lake Church, was because of a certain class claiming authority to be leaders, and the membership were to be baptized when they came into that organization. Lyman Wight claimed to be a leader, and Brigham Young claimed to be a leader, and there was a lot more of them claimed to be the true leaders of the church after Joseph Smith died.

Q.—Well, now, if the church you joined in 1837 was the same church that you joined in 1870 the last time, what use was there in your being confirmed at all? What was the necessity of your confirmation in the Reorganized Church?

A.—Well I think I have answered that question. I think I told you it was because of the different leaders leading off a portion of the church, that had their institution and those that came in, after being with these different leaders, must come in through the door, by being baptized and reconfirmed and I was one that had to do that.

30 I was confirmed a member of the Reorganized Church of Jesus Christ of Latter Day Saints,—the Church of Christ—denominated the Reorganized Church of Jesus Christ of Latter Day Saints. When I was confirmed the language used was something like this: "I confirm you a member of the Church of Christ."

I don't know that the word *reorganized* was used when I was confirmed. I have confirmed people myself. I confirmed them members of the Church of Christ denominated the Latter Day Saints. That is the language I used.

31 I went back to Wisconsin the second time to get the outfit to go down to Texas. There was nothing said about polygamy in Nauvoo at the time I left there in 1844; nothing said about it to my knowledge.

Lyman Wight broke off from the church at Nauvoo, because he became dissatisfied with Brigham Young. He thought that Brigham was usurping authority that did not belong to him. He was going to Texas, which was a long way from Nauvoo, and he concluded from the way Brigham and the church there were acting, without authority, that he would refuse to have anything to do with them and that was what he did.

32 I was acquainted with William Marks when I was a boy in Nauvoo. I knew him in Plano after we left Nauvoo; that was in 1868 that I saw him in Plano. I never saw him after that.

Yes, sir, I talked with him about the church, talked with him some in Nauvoo. I never introduced the subject of polygamy to him or he to me, but there was something said about it between us.

He said that he knew polygamy was practiced, but that he didn't know how far it was practiced there at Nauvoo. I don't know that he stated when it was first practiced there at Nauvoo.

He told me that Joseph Smith came to him at one time and said to him:—

33 Brother Marks, I am glad that you have not received the teaching of this doctrine, for now we have to go to work and put down this wicked practice, and I want you to call the High Council together and I will prefer charges against these members of the church who have entered into this practice of plural marriage, and if they do not repent, they will be expelled from the church.

That was what he said to me, and shortly after that he was arrested and taken to Carthage.

34 He said that he had been approached about this matter, this matter of plural marriage, and he had refused to have anything to do with it, and he wanted the High Council called together to take action on the cases of the members of the church who had violated the marriage law, in taking plural wives, and that he would

prefer charges against them. That was what William Marks told me in 1868. He said that was what Joseph Smith told him before his death.

He didn't say anything further than that he and Joseph Smith had this conversation that I have detailed, and that Joseph Smith said there were persons practicing it, and that they would be cut off from the church if they did not stop it at once and repent of their wicked practice, and that he would prefer charges against them before the High Council; but he was murdered before he had time to do it. That is what Marks told me. There was no revelation spoken of at that time between Marks and I. It was never spoken of between us at all at any time.

---

35 WILLARD GRIFFITH, of lawful age, being produced, sworn, and examined in rebuttal on the part of the Plaintiff, testified as follows:—

I reside in Shenandoah, Page county, Iowa. I will be seventy-eight years old the eighteenth of this month.

I have lived at Shenandoah about eleven years. Before that I lived in different places, in Illinois, in Wisconsin, and in Iowa.

I am a member of the Reorganized Church of Jesus Christ of Latter Day Saints. I became a member of it about a year after its organization. I don't know that I can state what year that was.

I have been connected with the Mormon Church since 1831. Sixty-one years past I have belonged to that church.

36 I became identified with that church at Fremont, Fremont county, Ohio, in 1831. There was a church organized there at that time,—a branch as we term it.

The head of the church at the time I joined it was at Kirtland. I held the position of an elder in that church. I was ordained an elder in the church in Indiana, and presided over a branch there.

When I left Indiana, I went to Nauvoo, Illinois. I went there in the fall of 1841. I was acquainted with Joseph Smith, and I am acquainted with the circumstances connected with his death. I lived within eighteen miles of Nauvoo, at a town called La Harp, in the same county. Joseph Smith was killed in June, 1844. I lived in Nauvoo until the spring of 1846.

I went to Nauvoo in 1841 and left there in 1846, but I did not live there all the time between those dates. In the summer time I lived out about eighteen miles, and in the winter time I lived in Nauvoo.

37 When I left Nauvoo in '46, I went to Wisconsin, Racine county. There was a church organization there at that time. The leader of the organization was named Strang. I went there because of the organization of the church there.

The church had a considerable membership in Wisconsin that had drifted away from Nauvoo. I suppose there was a hundred or a hundred and fifty there in Voree, as they called it, in Wisconsin, and James J. Strang was the recognized head of that church.

He claimed to be the successor of Joseph Smith the martyr after his death,—claimed to be the leader and head of the church, and the successor of Joseph Smith, by virtue of an appointment he claimed that Joseph Smith had made before his death, appointing him as his successor; that is what he held out.

I held a position in that church in Wisconsin. I was Mr. Strang's privy counselor, or in Mr. Strang's privy council, in the office he held there, in that covenant they had.

The covenant was of a peculiar nature, and a very binding covenant, and you signed your name in your own blood,—in blood drawn from your own veins. It was a covenant that was considered to be quite important. The nature of the covenant was to bind them together in one bond of brotherhood.

All who were there and took the covenant signed it in their own blood,—in blood from their own veins. It was considered that they were bound by it in one covenant of brotherhood, and that they all should stand up for each other, right or wrong. It was called a covenant, and it was originated there at Voree. At any rate, that was the first I ever heard of it.

38 I cannot say positively who originated that covenant, but it is my opinion that John C. Bennett and Mr. Strang originated it. It was a regularly formulated covenant.

We took the covenant, but I cannot now repeat very much of it; but it was a regularly formulated covenant, and was very stringent and binding in its terms. I remember it was to the effect that those who took it were to be true to each other, right or wrong.

The covenant was printed. I have not a copy of it, I never retained a copy of it, but I had that covenant published; published it myself. I do not know whether any of the publications are in existence at the present date or not. There may be some. I understood there was one in my neighborhood, but I do not know that to be a fact. I never retained one, for I never considered that it was of any great value or importance, but I could have done so.

I do not know that I can explain the covenant fully, but I was present at the initiating of a great many members, and the object of the covenant as I told you was to bind them together in a bond, the obligations of which, it was conceived, could not be broken.

It was a long time ago that these things occurred, and I cannot charge my mind now with all that occurred then. The penalty for violation of that covenant was disfellowship from the church, and considered to be an outcast and not recognized by the church or the covenant members who were faithful and true to their covenant.

A violation of the obligations of that covenant would be attended with personal violence; they were to be jeopardized and their persons and property were to be placed at the will of anyone who belonged to that covenant. They undertook to carry out that measure, but their forces were not strong enough to do so, and they had quite a rough time about the time it played out.

39 It was understood that parties who violated the covenant would be outcasts. It was not very long after the inception of this covenant before it was exposed and abandoned. I should think it was about eight months, something like that.

I proposed at one time to speak on the covenant; the people knowing my position and knowledge of it, by reason of my being Strang's privy counselor. I gave out the appointment in which I proposed to explain the covenant, and that was held in a private house; that is, the meeting in which I explained it, and after that, eighteen of the most prominent members said they would stand by me, and we put our shoulders to the wheel; myself and a sister remembered the covenant verbatim, and we wrote it out and had it published and threw it around promiscuously, broadcast, you might say.

40 After that I moved to Burlington, about a mile from Voree. I did not reorganize a branch of the church there at Burlington, but there were a great many old Latter Day Saints that were with Strang that settled around there.

I heard of the practice of polygamy in the church, but I cannot say that I know just what date it was. It was a little over a year, anyway, after the death of Joseph Smith that I heard of it.

I have my opinion of how it originated. I have my opinion pretty well grounded from observation, and I know how it originated and who was the originator of polygamy.

The originators were Williard Richards and Parley Pratt. They were members of the Quorum of Twelve as it existed then.

Parley Pratt was the prime originator of the system of polygamy. His after history proves that fact. He wrote a book called "Father Jacob," and introduced polygamy in a roundabout way.

I was an elder in the church while I lived in Nauvoo.

41 Joseph Smith never called the elders together as a body and talked to them on doctrinal points. I never knew him to call them together and talk to them as a body, but I have known him to talk to them from the stand. That would be as he preached to them on ordinary occasions. I never knew him to call the eldership together especially. I knew that to be practiced after his death but never before his death.

I know what the doctrine of the church was at the time of the death of Joseph Smith. I knew the doctrine of the church before Joseph Smith's death and afterwards, for I had some experience in both, and it was quite the reverse after his death of what it was before his death. There was quite a decided change after his death.

After his death, we were called together by the Twelve as it was then constituted, and as I belonged to a quorum; our quorums were called together and questioned by the president of the quorums as to whether they could or would preach such and such doctrines if they were sent out; it was done to ascertain and know if they would be competent to be sent out and represent the church in the fields so to

speak and preach all that was taught by the Presidency and the Twelve.

I was along with my quorum when we were questioned in that way. I was asked to preach polygamy. That was in the winter of 1845 or spring of '46. I think it was in the winter of '45. I had never been called upon prior to that time to preach the doctrine of polygamy. It was in Nauvoo that I was called on to preach that doctrine. Brigham Young was the recognized head of the church at
42 that time. Brigham Young and his council. I was not a member of his council. I attended with my quorum.

There were different quorums in the church, and they were all called together and questioned in the same way. We were asked to teach polygamy, and I did not consent to do it; and because I didn't consent I was expelled from my quorum. I was not expelled immediately; I was given one week's grace to make up my mind and finally decide whether I would do it or not; and as I persisted in my refusal to do so, I was finally expelled. When we were called together after the expiration of that period, of course I was of the same opinion, and they struck my name off the membership of the quorum.

I have never held to the doctrine of polygamy; have never believed in it; have always been in opposition to that doctrine. That was the reason I left the organization there at Nauvoo, in consequence of my opposition to the doctrine of polygamy.

There were many other doctrines that I objected to and would not accept. There were many appendages added to the doctrine there that I did not consider to be the true doctrine of the church, of the original church; and as I was asked to embrace them and refused to do so, I was read out of the church, or left it of my own free will. I was not expelled from the church. I was expelled from my quorum.

Strang did not teach polygamy to my knowledge, not from personal observation; but I am well satisfied from the facts that he did preach it, and practice it, too; there is no doubt about it in my mind. I am satisfied he practiced it both at Voree and at Beaver Island. I
43 am satisfied of it from the history I have of Mr. Strang, but I do not know it of my own knowledge.

I think there was one member of my quorum that took the same stand I did and was expelled from the quorum. Only one beside myself, but I cannot remember his name now.

I was acquainted with the church there from almost its first origin, and with all the old members in the church; that is, the first members who were considered to be in good standing, and I think I should have known something about it if the doctrine of polygamy had been taught or practiced in the church during the time of Joseph Smith, or at any time before 1844. There is not the slightest question about that, for my opportunities were such that I would have known of it.

I did not know of anyone connected with the church in an official

capacity who taught or practiced polygamy at any time during the life of Joseph Smith.

I do not know much about the endowment business. I never attended any of the endowments. I refused to go into the Temple at Nauvoo or have anything to do with it for I got quite disgusted with my observations of the way things were going on in the church.

I had paid my tithes and was invited to go in with my ward. We paid tithes by wards. That was in the winter of '45 and '46.

There was no system of endowments practiced before Joseph Smith's death. It was after his death, two years, a little over two years after his death that that was done. A little over two years after the death of Joseph Smith before the endowments took place. It was during the last winter they lived there in Nauvoo.

44 I do not know, but I was informed as to where the practice of endowment was originated.

I gave you the name of the party whom I thought originated polygamy. They originated the practice of it that winter by a proclamation from Brigham Young, which declared the year of jubilee, and that proclamation also declared that all who chose were free to choose for eternity, and that constituted the introduction of polygamy, for they were free to choose one or more wives, if they saw fit, for eternity. That was in accordance with a proclamation issued by Brigham Young, in which he declared the year of jubilee.

That was early in the fall of 1845, and it ran on through the winter of '46. I am not sure of the date, but they left in the summer of '46.

They did not have an endowment house there; they used the temple; the temple was partly finished at that time, at all events sufficiently so to enable them to attend to that part of their ceremonies in it. They did not have a separate house in which these endowments were given that I know anything about. If they did, I did not know anything of it. I understand that the endowments and sealings were all done in the temple. That was what I was informed, and I guess there is no doubt but that my information was correct.

The nature and extent of the endowments, as I understood it, was that there was a ceremony they went through with that they were to live entirely by the counsel of their superiors; that is, they were to follow their counsel in everything. They taught that the Book of Covenants was like a steamboat that had gone up, and they had no use for it, but we were to be governed and live by the counsel of our superiors.

The principal teaching that they sought to impress upon the membership was to obey the counsel, and they had no more use for the Book of Covenants as they termed it. They taught that the Book of Doctrine and Covenants was to be discarded, and that there was no more attention to be paid to it by those who indorsed Brigham's theory. They indorsed the Book of Mormon.

I never heard of any place being set apart for conferring these

endowments before the death of Joseph Smith, and I have said that they were not conferred that I knew anything of; and from the relations I sustained to the church, I do not believe that they could have been conferred without my knowing it; therefore I say that they were not, — that there were no endowments conferred before his death.

CROSS-EXAMINATION.

I am a member of the Reorganized Church of Jesus Christ of Latter Day Saints. I do not hold any position in that church; that is, no office; I simply hold my membership.

I do not remember the time that the church was reorganized. I was not present. I would say, however, that it was twenty-five or thirty years ago; somewhere along there. I became a member of it after the war, about 1865. Do not remember the exact date, but it was just after the close of the war, or about the close of the war.

I do not know that I claimed any official authority after the church broke up at Nauvoo, for the reason that I joined Mr. Strang's church, which lost me my membership in the old church, or at least I claim it did. I never had a certificate of dismissal from the church at Nauvoo, and was never tried for any offense against the laws of the church at Nauvoo. I separated myself from it, but was not expelled that I know anything about.

There were never any charges brought against me that caused my separation from the church. I never authorized anyone to take my name off the church roll there at Nauvoo.

Before I left Nauvoo I was a member of the Quorum of Seventies. The church had Quorums of Seventies; there were over twenty Quorums of Seventies. That was under Brigham Young's reign. I belonged to a Quorum of Seventy under Brigham Young. My quorum was called before the Presidency, by the president of the quorums, to receive instructions on the question of the doctrine of polygamy.

I was appointed to that quorum in the fall of 1845. I was ordained to that quorum, if I am not mistaken, in the fall of 1845. I do not remember who laid their hands on us to ordain us. There was a string of us there that would reach across this room, and we were all ordained at the one time. There were men set apart to ordain us, and they performed the ordination, but I do not remember who it was that superintended the ordination ceremonies.

I suppose the church had a record of our appointment and ordination. Each quorum was ordained separately, and they organized and elected their president, and the president of each quorum kept his own records, and then there was a president over all the quorums. I suppose the record went to Utah. I do not know anything about it, but I suppose it went there. I do not know what became of it; never troubled myself about it, and I do not care anything about it.

Prior to the death of the prophet Joseph Smith, I was an elder in

the church. I was ordained by William Miller and William Redfield. I was proposed by a branch for ordination, and my introduction was accepted. I presided over a branch after I was ordained, in Indiana, at Warwick.

I did not preside there at that branch at the time I was ordained a member of the Quorum of Seventy. It was after that a good while, that I was made a member of the Quorum of Seventy.

I was ordained an elder in the winter of 1839. I then lived some three hundred or four hundred miles from Nauvoo, in Indiana. I remained there something over two years. I left there in the fall of 1841, and then moved to Nauvoo, Illinois. Lived out of Nauvoo for a while; used to work out there in the summer, and come into Nauvoo to winter, as I stated before. I only lived out there a part of the time, and the balance of the time up to the time I finally left Nauvoo I lived in the town.

The first winter I lived in Nauvoo was the winter of 1841. I lived there with a brother-in-law of mine, by the name of Henry Wilcox.

48 I was married in 1838, in Ohio. My wife was a member of the church at the time we were married. She is still living; we are still living together at our home at Shenandoah, Iowa.

I was well acquainted with Joseph Smith; became acquainted with him first in 1830. That was the first time I ever saw him. I became a member of the church in 1831. I made the acquaintance of Joseph Smith first at Kirtland, Ohio. That was the headquarters of the church at that time.

I remained at Kirtland from the time I became a member of the church in 1831 until the fall of 1838. I left there in the fall of 1838. The winter of '38 and '39 I wintered in the city of St. Charles, Missouri, and went from there to Indiana.

I never was at the town of Independence, Jackson county, Missouri. I was on my way to Ray county, Missouri, or Far West from Ohio, and was about one day's drive from St. Charles when I was intercepted and informed that the Saints had been driven out of the State, and no more were to be permitted to come in, and so I stopped there at St. Charles and wintered there.

49 From St. Charles I went to Evansville, Indiana, and staid there about two years and a half and went from there to Nauvoo.

Between 1831 and 1838 I saw Joseph Smith at Kirtland often, and heard him preach many a time. Joseph Smith was not at Kirtland all the time from '31 to '38, he was backwards and forwards, and was in Missouri once, I believe; was out sometimes on missions, but I heard him preach often during that period in Kirtland.

I was born and raised there within about five miles of Kirtland, and heard him preach there from the time he first came there with the church.

Of course I understood the doctrine of the church at Nauvoo, and the doctrine of the church while at Kirtland. I think I understood it pretty well at any rate.

I know the cardinal principles of the doctrine of the church.
50 They are faith, repentance, baptism, the resurrection and eternal judgment. The church prior to 1844 did not adopt any new doctrine that I know anything about.

I have heard of doctrines, and schisms, and everything in the church since that time, but these I have named were the doctrines of the church from its organization up to 1844; the church that I joined, and those I consider to be the doctrines of the church I now belong to. That is not my opinion,—that is my knowledge.

The church was organized upon the New Testament system and the New Testament is one of the books of doctrine of the church. We believe the Book of Mormon to be a true history. We believe the Book of Doctrine and Covenants to be an inspired book; that is, we believe its contents to have been inspired.

These are all the books of doctrine of the church. I am speaking now of the Church of Jesus Christ of Latter Day Saints, ever since it was organized and for all time.

51 I do not know of any other books of doctrine of the church, none except the Bible, the Old and the New Testaments, the Book of Mormon, and the Book of Doctrine and Covenants.

Of course there is a retranslation of the Bible, but I include that with the old Bible as one of the books. I believe the retranslation of the Bible is correct, but I do not know that the church accepted it as correct and indorsed it. I cannot tell you when I first saw the new translation. It was translated in Joseph Smith's day, but it was not printed then.

52 I was a member of the Sixteenth Quorum of Seventy under Brigham Young. The first time I ever heard of the doctrine of polygamy was in the fall of 1845, or spring of 1846. Either in the fall or win-
53 ter of '45 and '46. I think that was it, or better perhaps to say in the fall of '45 and through the winter and along in the spring of '46. It was introduced about a year after the death of Joseph Smith.

I saw Joseph Smith after he was dead; went to Nauvoo to see him and I did see him. It was in Nauvoo that I first heard the question of polygamy discussed or spoken of.

I was called into Nauvoo, with all of the surrounding branches, by Brigham Young's proclamation, at the time that the people were gathering for the purpose of driving the Saints out and persecuting them. At that time we were advised to go into Nauvoo, so that we could the better protect ourselves from the violence of the mob, and I went there for winter quarters in the fall of '45, and I lived there through that winter, and in the spring of '46 I left there.

I had not been at Nauvoo a great while before I was made a member of the Quorum of Seventy. I cannot say how long, but not a great while, and I can say that that was the first occasion that I heard of the doctrine of polygamy, and the first positive evidence I had of its being taught by Brigham's organization was when it was presented to my quorum. I had heard rumors of it before that time,

but that was the first I ever heard of its being the doctrine of the organization they had there, and that Brigham Young was the head of.

The doctrine of polygamy was a matter of common talk at Nauvoo in the winter of 1845 and '46, and I stated that I had heard rumors of it before it was finally presented to the quorum, but I cannot begin to tell who I heard speak of it, that is something beyond my power. I do not remember it. I do not know certainly that I heard the rumors of it before I went in that Quorum of Seventy; but at any rate, pretty soon after I became a member of that quorum we were called together and instructed that that was a doctrine that we would have to preach if we were sent out, and I repudiated it,
54 and was cut off from the quorum for my action. I was expelled from the quorum because I refused to agree to teach and preach polygamy.

I did not belong to the quorum a great while, just a few months, possibly five or six months, something like that.

55 I said a while ago that I had heard polygamy preached at the time I became a member of the quorum, but that was owing to the fact that I misunderstood your questions, for I never heard it preached before that time. I heard of the doctrine of sealing one woman to a man for eternity before I became a member of the quorum, but nothing about polygamy, and I heard of that just about the time of the introduction of polygamy. Just a little before, for that was the introductory part of polygamy.

I never heard the doctrine of polygamy publicly advocated in the world, never heard it publicly advocated at all, any time or place. I heard it in the quorum at the time I spoke of, but that was just to the quorum, and then I heard it talked about in a number of circles. It was a matter of common chat among the people in a private way, but I did not hear it publicly taught or preached.

I heard it taught in the quorum in the winter of 1845 and spring of 1846. I would not say positively that I ever heard any talk about polygamy or even rumors about that doctrine before I became a member of the quorum. There was talk about the question of sealing at the time I became a member of the quorum, but there was nothing known about polygamy; but it was not long after that it was introduced as a subject of conversation or common chat.

The quorum to which I belonged was called together especially for that matter of polygamy to be presented to them, and that matter was propounded to the quorum that I belonged to by the president of the quorum. He wanted to know if the members of the quorum would agree to teach that principle, that is, the principle of plural marriage or polygamy, as it was called, in case they were sent out to preach the faith, as it then existed, and the statement was made by the president of the quorum that if there was anybody there who would not agree to teach and preach it, they were to be expelled. That is what I know occurred in the quorum that I belonged to, and

I understood that all the other quorums were called together and asked the same question.

56 One of the first men that spoke to me on the question of polygamy was Reynolds Cahoon of the temple committee. I was pretty well acquainted with him, and talked with him in the winter of 1845. I talked with quite a good many men of considerable distinction in the church upon the subject, whose names I cannot give you now, but I talked with them, and some of them agitated very extreme action.

I heard Brigham Young at La Harp, Illinois, in 1845, preach a sermon that was very much contaminated with polygamy.

I took a covenant there at Nauvoo at this same time, but I cannot give you the name of the first man that spoke to me with reference to the endowments. I talked with a good many people who took the
57 endowments there, and they informed me that they were introduced as a part of the ceremonies of the church in 1846.

I have talked with different ones who have been through the endowments, and some of them were sealed. I was never approached to indorse the system of endowments at all.

As I told you before, I do not know that I can give you the date exactly, or the time that I was first spoken to on the subject of endowments, nor the name of the party who first spoke of it; in fact, I am sure I cannot do that, but it was something like eighteen months or such a matter after Joseph Smith's death.

I can remember all these things in a general way, of course, but all this occurred a long way back, nearly fifty years ago, and I cannot remember who I first heard talk about it, or when I first heard it talked of, only in a general way. I remember right well the fact that it was spoken to me, and that I did not approve of it, and so expressed myself at the time, but I would not remember, however, that I heard it at such and such a particular time. I could specify the names of a great many men I heard talk of it, but I canot say which one talked about it first.

I heard Phineas Young and a number of different men I was associated with talk about it. It was not a matter that was kept secret. It was a matter that was talked of freely.

If I could recollect the names of the whole community there, I could name a great many more, because it was generally talked of, but there were very few that stood where I did in the repudiation of that doctrine. I repudiated it, and would have nothing whatever to do with it. There was now and then one, of course, who repudiated
58 the doctrine and would not indorse it. I think there was a hundred in Nauvoo that repudiated that principle, probably two or three times that number, and also would not indorse the sealing of wives. I cannot say how many repudiated that doctrine, but certainly two or three times the number you mentioned.

I never took any of the endowments. I was invited to do so in the winter of 1845 and '46. I said I did not know of any endowments in the old church prior to 1844, but the endowments at Kirtland Tem-

ple. They had an endowment there at one time, but I know of no other endowments that were ever practiced in the church, except at Kirtland Temple, and I say the endowments that were taught and practiced in 1845, and '46, had not been practiced in 1844, and prior to that time, because I never heard anything about it,—did not know anything about it, but I did in '45 and '46. And I will say that I do not think it could have been practiced without my hearing of it. I think I should have known of it if it had been practiced. There is no record of these endowments that I know anything about.

In the fall of 1845 and the winter of 1846 a few of the members were practicing polygamy. I cannot say that they had been practicing it long prior to that time, for if they had been before that
59 time, it was done on the sly. It was not openly and publicly advocated as a public doctrine, was not advocated prior to the fall of 1845, and I mean to say that I do not believe it was practiced privately by the head men of the church prior to that time. I do not believe it could have been so and I never hear of it. If it was, it was done mighty sly, and they took good care to keep it secret, and not let it get out. I never heard it before the fall of 1845 in any way, and I say the same with reference to the endowments, and I say I do not believe either the endowments or polygamy were practiced until late in the fall of 1845. It could not have been publicly known that I was opposed to this principle or practice before that time, for I did not hear anything of it before that time, therefore it could not have been known how I felt about it, as there was no occasion for me to express myself.

63 I knew a man in Nauvoo by the name of William Law. Knew he gave his testimony before the grand jury against Joseph Smith. I heard his oath, for I was one of the grand jury that took his testimony. The oath was that Joseph Smith had violated the rules of propriety, had violated the pledges of his office in church, and otherwise, at least he swore that Joseph Smith had made improper advances towards his wife; that is what he said, and you can place your own construction on it. And the grand jury, or its foreman, told him to bring his wife before the grand jury, and he did not do so. William Law said his wife would not appear before the grand jury in the State of Illinois.

69 I took the paper that was published by the church there, the *Times and Seasons*, and read it while I lived there. I do not know that I read everything in it, but I read it, I suppose, pretty well. I was a regular reader of it. It was a weekly paper. The doctrines of the church were never altered in the books between 1844 and 1847. The doctrines of the church, so far as contained in the books was concerned, and those practiced by the church, were the very reverse of each other. The church at that time did not recognize the Doctrine and Covenants. They had a lot of secret work they were practicing, that was not authorized by the books of the church or anything else, that I know of, that was authority in the church before the death of

85 Joseph Smith. I mean by the "church" in the answer that I gave, the "church" organized April 6, 1830, is the same church that exists to-day. It is the same church to-day that it was before the death of Joseph Smith. It maintains the same doctrines, and uses the same books as it did, at the time of the organization of the church, and all along during the lifetime of Joseph Smith. I mean the church that Joseph Smith organized, and it was organized under the doctrine of
86 the original church. That is what I believe. I do not believe there was one fourth of the members that believed, or went into the practice of polygamy. Do not believe that one fourth of the membership held to that doctrine, that they established and went into and practiced. They went into that practice, because the leaders of the church were in favor of it, and they used the power they had in their hands to establish it in the way they did, and they did not get any great number of the membership of the church to back them up in it.

RE-EXAMINATION.

92 I said in my examination that I was a member of the sixteenth Quorum of Seventy. There were as high as twenty-seven of these quorums, I believe.

These were organized by Brigham Young after the death of Joseph Smith. They were organized soon after the contentions as to who should be the leader to preside.

I think there were but five quorums of seventies existing at the death of Joseph Smith.

JAMES WHITEHEAD, being sworn on the part of the Plaintiff testified as follows in Rebuttal:—

I testified in this case in February last, and on that occasion testified that I was the private secretary of the prophet Joseph Smith, and I was.

I was engaged in that capacity a little over two years, and was so engaged at the time of the death of the prophet. I was a member of the Church of Jesus Christ of Latter Day Saints, during the time that I acted in the capacity of private secretary for the prophet Joseph Smith.

93 I do not know anything about the doctrine of polygamy ever having been taught in the church by Joseph Smith, at any time prior to his death. I never heard him teach it, either publicly or privately, he never said a word to me about it at all, and I never heard it taught either publicly or privately by him, or by an elder or any other officer in the church prior to his death; and I had a good opportunity of knowing it if any such a thing had been taught
94 by the prophet or anyone else, because I was there in his office and with him continually.

I was well acquainted with his family and with his wife Emma, and I never saw anything, or heard of any such a thing, being taught

there in Nauvoo, prior to the time of the death of the prophet. I never even heard of it one way or the other.

There was no elder in the church nor anyone else in authority in the church, during the time I was there in Nauvoo, occupying the position of private secretary to the prophet, that taught or practiced polygamy. I never heard anybody teach any such principles prior to the prophet's death. I have heard persons holding office in the church preach upon doctrinal points a great many times, both Joseph Smith and others.

I have heard Joseph Smith talk to the elders and other officers in the church upon doctrinal points; have heard him preach to them a great many times, upon doctrinal points, and heard him talk to them in a conversational way, upon doctrinal points or upon the doctrine of the church.

95 These conversations took place frequently in the office when I was there, but they would not always be in his office, sometimes talks would occur at his house. I have heard him talk in his office and in his house, about the doctrines of the church, upon the doctrines of the faith of Christ, in fact all the leading doctrines, tenets, and principles of the church. I never heard him say anything about a plurality of wives.

I knew a man by the name of Kingsbury, he was in the storeroom there in Nauvoo, as a clerk, delivering supplies, provisions, etc., to the ones that labored on the Temple, and other places for the church, under the direction of Newell K. Whitney, Bishop of the church. His name was Joseph C. Kingsbury, he did not have anything to do whatever, with the duties of secretary to the prophet Joseph Smith.

I also knew William Clayton, knew him in England before he came to this country, and also knew him after he came to Nauvoo. During the time that I was performing the duties of private secretary to the Prophet, he was a clerk in the office for quite a while; he did not have the same duties to perform that I had; he was there helping on the books and doing whatever he was directed to do.

He was a clerk and attended to a great deal of the out door business, while I was the private secretary of the prophet; had his private papers and did that kind of work.

William Clayton was Joseph Smith's private secretary in some
96 parts of the business. He attended the outside business and did whatever he was directed to do. William Clayton was there in the office before I was, but was not there all the time after I came. He was removed from his position as private secretary, by Joseph Smith and the committee—the temple committee—about the time I was appointed, because there was something took place in connection with Clayton's work that gave dissatisfaction; there was some money disappeared and he was blamed for it, and for that reason he was removed from that office, that occurred in 1843, in the beginning of the year.

After he was removed as private seceretary or clerk in the office,

he did outside work, looking after the property of the church outside. The church at that time owned considerable property, and would buy in property and sell it out again; and he attended to that kind of business.

I heard about the order of the church on the question of sealing, I cannot tell the date that I first heard of it, that is the time of the year, but it was in the early part of the year 1843, I think it might possibly be the latter part of 1842, but I would not be positive about
97 the date. That was the ordinance of sealing as they called it, of husband and wife. They would be married according to the ordinances of the laws of God, not only for time but for eternity as well.

That applied only to husband and wife, and a man could not have but one wife, they were not allowed to have more than one wife, but could have one wife and could be sealed to her for this life, as well as for the life to come.

Newell K. Whitney, the bishop at one time showed me a revelation on the question of sealing. The revelation that Whitney showed me was on the matter of sealing, that was before they went to Salt Lake City, it was after the death of Joseph Smith that he showed me the revelation on sealing.

The circumstances under which he came to show it to me were; I went up to Winter Quarters or to Omaha to settle my account with the church, and make my report. That was after they had left Nauvoo, and were in Winter Quarters at Omaha, or near there. I
98 went there to make my report and settlement with the church, and while I was there I stayed all night with Bishop Whitney, and he showed me this revelation; that was in the spring of 1848.

I do not recollect the date that the revelation purported to have been given; I do not recollect the date positively, but my recollection is that it purported to have been given in 1842, or 1843. The document was about as much as would fill both sides of a sheet of foolscap, about three sides of a sheet of paper like that.

It was written, I did not write it. I read it. I think it was in the handwriting of William Clayton.

I have never seen it since that time. I have never been near the Utah Church since that time. I do not know what became of it. I never saw it in print. I saw what they claimed was it, or what purported to be it, published in the Book of Doctrine and Covenants, by Brigham Young in Salt Lake.

But the one published in the Book of Doctrine and Covenants by the Utah Church was not the one that Bishop Whitney showed me
99 at Winter Quarters. It was not the same at all. It was entirely changed. It was so changed that it sanctioned polygamy, and that change was made by the Brighamites. For there was no such thing in it when I read it. You can find it for yourself in the Book of Doctrine and Covenants published by the Brighamites in Salt Lake, and you will see in it, as published by them, that it sanctions and

imposes polygamy on the church, but there was no such thing in the revelation that Whitney showed me.

I remember when I first saw that revelation, they have in their Book of Doctrine and Covenants, it was brought to me by a man from Salt Lake, and he showed it to me, and asked me what I thought of it, and I told him that it was spurious. I did not recognize the revelation published in the Book of Doctrine and Covenants from Salt
100 Lake, as the revelation I had seen at Winter Quarters. It was not the same. It was changed so that it sanctioned polygamy, and there was nothing about polygamy or plural marriage in the revelation that Whitney showed me.

It was entirely changed, but there were some points of similarity in it. It did not have the same language at all. I knew, that, when I read it I considered that they had got that revelation from Bishop Whitney, and had changed it and added to it, it had nothing to do with polygamy when I read it at Winter Quarters; and when it was published, they had changed it around until they made it sanction polygamy; and the revelation that Whitney had, did not say anything about polygamy

When I lived at Nauvoo, I resided, maybe, three hundred yards from where Joseph Smith's house was, I saw him there frequently, perhaps not every day, but almost every day, that he was in Nauvoo.

101 I was there in his office, as his private secretary, at the time he was killed. I was in his office on that day, and was keeping the books at that time.

Joseph Smith had one wife and her name was Emma; I do not know any other woman who claimed to be the wife of the prophet, there at Nauvoo, nor at any other place. I do not know of any other wife he had other than Emma, at any time or place. I never heard of such a thing during his lifetime.

I do not know of any woman who claimed to be his wife or plural
102 wife. I never saw any of them, do not know anything about that. I never heard anybody claim, except Emma Smith, that she was the wife of Joseph Smith. There was never any woman who came to me, or Joseph Smith in my presence, during the time of my employment as his private secretary, for money, claiming that she was the wife of Joseph Smith, except his wife Emma.

There was no entry of that kind ever made on the books, of money paid by me or by him to any woman claiming to be his wife, except Emma.

CROSS-EXAMINATION.

The book marked Exhibit "A," and entitled "The Doctrine and Covenants," published by the Utah Church at Salt Lake City, is the book that contains the revelation on polygamy, I believe. I have read page (464), I have read what is in that book before, but I never heard of it or saw it anywhere but in there. I knew nothing about that at all until I saw it in that book.

I can swear positively that it is not the same as the Whitney reve-
103 lation that was handed to me and that I read at Winter Quarters; because that revelation that Whitney had, had no such words in it to my knowledge, that was put into it by Brigham Young, or some of his clique, for it was not in there at the time that Whitney showed it to me, of that I am positive.

I did not say that there was enough of the Whitney revelation in this revelation in the Utah Book of Doctrine and Covenants for me to identify it. I did not say any such thing. There was nothing of the sort in it.

I said they had taken parts of that revelation and added to it in such a way as to change its meaning entirely. I did not say that was the same revelation, and I do not say now that it is or that it is not, but if there is any part of the revelation that Whitney showed
104 me in this, it has been so mutilated, and changed around, as to entirely change its meaning from what it was.

I say that I could read over two or three pages of manuscript forty years ago, and now tell the substance that was in it, for it was something that particularly impressed itself on my memory, and was something that left a very strong impression on my mind, for that
105 was the first time I had seen that revelation on sealing, and the only time I saw it, and I was interested in it to a great extent, and I observed it closely, and I remember about what the doctrine was that it taught, and I know that this doctrine of polygamy was not taught in it.

I will swear positively that that revelation that Whitney showed me was not the same as this published in this book, they were not the same at all. I can tell from my memory that there are principles taught in this book, "Exhibit A," in this alleged revelation, that were not taught in the revelation that Whitney had. I know that of my own knowledge. I have given the reasons why I would be likely to remember this revelation, and what was in it, that Whitney showed me, and I do remember it in substance, and I know that the principles that were taught, in the one that Whitney showed me, are not the ones in this book, "Exhibit A," and if it is the same revelation, it has been added to, and changed, so that there is not
106 the same meaning in it, that was in the original. The one that Whitney showed me did not teach any such stuff as this here in "Exhibit A," nor any like stuff.

I knew William Law, at Nauvoo, while I was private secretary to Joseph Smith, he became disaffected towards the church while I was there at Nauvoo, and went off along with John C. Bennet, before Joseph Smith's death.

111 I was not the secretary of the church, I was the private secretary of Joseph Smith, and kept his journals and his letter books.

Brigham Young was never chosen President of the church to my knowledge. If he was ever chosen President I do not know anything about it. They claimed at Winter Quarters that he was

chosen President, at the time they held a conference there at Kanesville, but I was not there, and do not know anything about it of my own knowledge.

He was the President of the "Twelve" while I was at Nauvoo, before the death of Joseph Smith, but I do not know when he was chosen President of the Twelve.

He was not accepted at Nauvoo, after the death of Joseph Smith as the President of the church, not at Nauvoo, no, sir. I am positive that he was not chosen President of the church at Nauvoo.

I am acquainted with the publication known as the *Times and Seasons*, that was the church publication just the same as the *Herald* is now. I have read from page (637), of the *Times and Seasons* the part you requested me, as follows:—

SPECIAL MEETING.

113 On the eighth of August, 1844, at a special meeting of the Church of Jesus Christ of Latter Day Saints, convened at the stand in the city of Nauvoo, President Brigham Young called the audience to order, and arranged the several quorums according to their standing and the rules of the church. The meeting had been previously called, as stated, to choose a guardian or trustee for said church.

That does not refresh my recollection, I knew that before I read it to-day, as well as I do now, and I say now, notwithstanding the quotation I have read, that Brigham Young, on the eighth of August, 1844, was not the President of the church, and I say at that time he was not elected President of the church, and he was not the acting President of the church at that time. He was the President of the Quorum of Twelve and that was all.

---

117 C. E. REYNOLDS, of lawful age, being produced, sworn, and examined in rebuttal on the part of the Plaintiff, testified as follows:—

My name is C. E. Reynolds, I live in Cedar county, Missouri, have lived in Cass county, and Jackson county, Missouri. Before living in Jackson county, Missouri, I lived in Woodford county, Illinois, near Washburn. I was born in New York City, I will be seventy-two years old October 16 next.

I was a member of the original church of Jesus Christ of Latter Day Saints, at the time of the death of Joseph Smith. I lived in New York City at that time; became a member of the church in New York City, was baptized by James K. Blakeslee. I was acquainted with a man by the name of Granville Hedrick. The first time I ever saw the man was in Lakin, county seat of Marshall county, Illinois. I do not remember exactly the year, but it was somewhere about the year 1850, I first met him. I was a member of a religious organization with Granville Hedrick in Illinois, about that time.

Granville Hedrick was an elder in the original church, that was organized April 6, 1830. He was an elder in that church before the death of Joseph Smith. I came to Jackson county, Missouri, under
118 the direction of Granville Hedrick, in 1868. I cannot say positively

how long after I came that Granville Hedrick came, it was something like a year or two after we came that he came. I have seen the book marked "Plaintiff's Exhibit W," before; it is a work of Granville Hedrick's.

That book contains the doctrine that was presented by Granville Hedrick, the doctrine that was known as the doctrine of the Hedrickite Church, that we all believed in at that time. I have seen that book before.

I am acquainted with Charles A. Hall, one of the Defendants in this case. That is the gentleman sitting there. I would not be certain as to the date I became acquainted with him, but it was some three or four years ago anyhow. He had not been here a great while before I got acquainted with him. I mean here in Independence.

I do not think Charles A. Hall was a member of the Hedrickite Church at an early date. He belonged to the Reorganized Church of Jesus Christ of Latter Day Saints for quite a while, if I under-
119 stand it right. I cannot tell the time exactly when he united with the Hedrickite Church, because he attached himself to the church, before I knew anything about him. I was a member of the church at the time, but I did not know anything about his having become a member of it until after he was installed in a position.

I am not positive about the time he was installed in a position in the church, my recollection is not very good on the matter of dates. I cannot state when it was. To the best of my judgment it was about four or five years ago.

I have had lots of correspondence with Charles A. Hall. I received the letter you now hand me from C. A. Hall, one of the Defendants in this case. That is his hand writing and his name is signed to it. That is the letter that I received from C. A. Hall, one of the Defendants; the letter is marked Exhibit "200."

I have also seen the letter which you now hand me, before. That is another one of the letters that I received from C. A. Hall through the mails. It is one of C. A. Hall's letters. That is the gentleman
120 here, and one of the Defendants in this case. I received that letter from him through the United States mail. The letter is marked "Exhibit 201."

I do not know what month it was that I received "Exhibit 201," it says the sixteenth of some month, but the month is not stated there, but it was in 1891. The figures showing the date were "December 3," and then there is 3 "16-91." That is the way I make it out. The heading of the letter is "Independence 3-16-91," but it does not say the date of the month.

I was a member of the same religious organization with C. A. Hall, at the time that I received these letters. We both belonged to the
121 same religious organization, the title of that organization was the Church of Christ, commonly called the Hedrickite Church.

I had correspondence with Mr. Hall with reference to mortgaging

the Temple Lot, the property that is now in controversy in this suit. These letters to which my attention has been called were with reference, or some of them were, to that subject.

Mr. Hall wanted to mortgage the property. From these letters I understood that he wanted to raise money on these lots in controversy, and I understood, well all I know about it is what these letters say. That is all I know about it, and they will speak for themselves.

The letter you now hand me is one of the letters I received from C. A. Hall, one of the Defendants in this suit. That is marked "Exhibit 202," the date is "Independence, 8-11-'90."

The letter you now hand me is also a letter I received from C. A. Hall, in 1890, or 1891; it is dated "Independence, 6-17-'90." I received that letter from C. A. Hall. The letter is marked "Exhibit
122 203," and I received it from C. A. Hall one of the Defendants in this case.

Q.—The witness, Hill, in giving his testimony in this case in behalf of the Defendants, testified that there was no effort made, nor any proposition made or adopted, or considered, by the church of which he was a member, looking towards the dressing of the members in the same dress, that is the women dressing in one uniform dress, and the men all being clothed in one pattern of dress as regards color, texture, and quality.

A.—Well, I cannot say that I know much about that. I received communication from Mr. Hall with regard to that question amongst others. C. A. Hall was the presiding officer of the branch here at
123 Independence, at the time these letters were written to me.

It was indicated to me by the letter Exhibit "201," from C. A. Hall one of the Defendants in this case, and in that and other ways I learned that there was some question about this matter of dress in the church, and I wrote to other members of the church and asked them what it was, and they stated the case to me, and said it was about the matter of dressing, and they objected to it and would not conform to it, and a number of the members of the church withdrew on account of the orders or rules made in the church with relation to dress, there were several of the Haldemans, Franklin and his wife, and several others that I cannot name left the church because of the rule adopted with relation to dress.

124 Mrs. Granville Hedrick left the church because she called C. A. Hall an impostor and they turned her out on that account. That is what I learned was the reason they turned her out. Mr. Hall will not deny that.

I was an officer of the church at that time,—I was an elder. It was part of my duties as an elder to know what was going on in the
125 church. I had to see that the law was kept and of course I could not see that the law was being kept unless I knew something about it. The Exhibits above referred to, "200," "201," "202," and "203," are in words and figures as follows, to wit:—

EXHIBIT "200."

INDEPENDENCE, 3-30-91.

126 C. E. REYNOLDS AND WIFE,

Dear Bro & Sis: — Your letter received and read to the brethren. You will find the word amen used often in the middle of a revelation. That does not of necessity end a revelation, as it is often used at the end of a paragraph or subject. I have a Book of Commandments, and find there are some changes, but as I said before in writing about the *Evening and Morning Star*, the changes are all in our favor. We are aware that mistakes have been made, and we may even now be mistaken in some things, but we are trying to correct every mistake as fast as we find them out. We are satisfied that Granville made a mistake in advocating an organization on the basis of the revelation given to the 12 on Priesthood. That revelation was not given till 1835, but it was in the first edition of the D & C and there was no date when it was given, and the church has made the mistake for years in thinking it was given before 1834, or before Joseph fell. I examined the history some time ago, and found just when it was given and told the brethren, but some did not like to give it up, even when they knew it was given after Joseph fell, but most of us have laid it aside as unreliable and are not going to build on that or any revelation that was given after Joseph fell, and in consequence of some of the revelations being changed that was given before Feb 24th, 1834, we have to be very careful how we receive them. We have been trying to get a correct understanding of the law, and the time is not far distant when the work of this church will be either approved by God pouring out His spirit in power upon us, and giving us an endowment of the Holy Ghost, and give us power and authority to set these things in order, or we will be moved out of the way as unprofitable servants. To whom much is given much is required, and we must do something instead of talking so much, and if we are going to come out from under condemnation. We are not going ahead yet. We are trying to regain the ground lost in the early days of the church, and when we get back to the law and order given in 1830 & 1831, then we may expect to start on towards perfection. We are glad that the same spirit is working with you, that seems to be moving us to greater efforts. We are warned that the evil one will try to cause division and contention in our coming conference. Pray that truth and right may triumph over error and wrongdoing, and we will remember you. Your brother,

C. A. HALL.

Exhibit "201," is in words and figures as follows:—

INDEPENDENCE, 3-16-91.

129 C. E. REYNOLDS & WIFE,

Dear Bro and Sis:—We received your letter and was glad to hear that you were well, and interested in the work that we are all engaged in. Sis Hall is quite sick now. I got my eye hurt at the shop, and have not been able to work since the 28th of Dec, but I am about well now. The rest of the saints are well as far as I know. G. Harter has withdrawn from the church. Bro. Frisby and Hill have been depending on me to write and so have neglected to write to you, but they have not forgotten you, or lost their interest in your welfare. The mission work is progressing very favorably, 3 have been baptized and quite a number are near the kingdom. The brethren report they feel well, and the Lord is blessing them in their efforts, and they do not want for anything needful. Bro Cole will come back about the 1st of April. The rest will continue in the work. Some of the Indians expect to attend the conference on the 6th of April. In regard to the revelations in the Book of Covenants, we are aware that there are many things that are not correct. I have had the privilege of comparing the revelations in the D & C with those published in the *Evening and Morning Star* printed in Independence, in 1832 & 1833, and find some very important changes have been made, but the changes are all in our favor. I have the corrections, and when we get able to have our own church books, we will print the revelations

as they are in the *Evening and Morning Star*. I do not think we are trying to practice or teach anything contrary to the Book of Mormon. The question we are talking about now is pride and dress plain. We have almost concluded to come to an equality in dress; that is, all the men and boys will have their clothes made of the same kind of cloth and in the same style, and all the women and girls have their dresses made out of the same kind of cloth and in the same style and be very plain. We have concluded from careful examination of the word of God and by much fasting and prayer, that unity cannot be obtained unless we cast aside all pride and become equal in dress to start with and in all other things as soon as the Lord will open up the way. Let us know what you think of this. May the Lord bless and prosper you is my prayer.

Your brother in Christ,

C. A. HALL.

Exhibit "202," is in words and figures as follows:—

INDEPENDENCE, 8-11-90.

130 DEAR BRO & SR REYNOLDS:—

I received your letter to-night, and will try and explain if I can, how the matter stands. First, I want to ask you to be very careful and not let any of the Josephites read any of my letters to you, for if you are not aware of it, some of us know by experience, that the Josephites are the worst enemies we have got, and have tried their best to run us down, and get what little we have got. If you will read the *Truth Teller*, you will see how they misrepresented and done all they could to stop the work. On the other hand the Utah church have sent us money to help pay the taxes, and never tried to injure us, and it was prophesied years ago that we would get our strength from the people of Utah, and I believe the time is not far off, when we can, if we will, receive the strength we need to enable us to publish to the world our position and expose false doctrine.

You have written several times that we ought to make an effort to do this and we felt just as you did, that these false doctrines must be exposed and the truth advocated, but how was it to be done. We have had our hands full to pay the taxes. Only a few have done anything to help, and we will be forced to mortgage the temple lots to those who are our enemies, if we have to make any improvements, which will have to be made before another year.

This was revealed to me at the time the revelation was given which I sent, you, and I would not tell anyone about it. I wanted the Lord to reveal it through some one else, and I thought I would work hard and encourage others to work, and we would raise money in that way to do the printing, but the Lord sent an affliction on me. I never suffered so in my life, and as I was praying and asking the Lord why I had to suffer so, and why I could not get relief, it was made known to me that I had done like Jonah, and that I must repent and make known to the church what had been revealed to me, and I promised the Lord I would do my duty, and I began to get well, and have now recovered so I am as well as ever.

I made the matter known to the church, and we all made it a subject of fasting and prayer, and the Lord gave a strong testimony through one who had declared that they would never vote in favor of borrowing money on the temple lots, that it was of the Lord, and now, Bro and Sr Reynolds, the Lord has given us directions by His Spirit, to use this property to carry on His work: and the way for all the saints to do is to make it a subject for fasting and prayer, and that the Lord will direct you in the right in this matter. I do not want to influence you, I want the Lord to direct us individually and collectively, and then I know all will be well. We would not think of talking this step in our wisdom. Nothing but the direction of the Spirit of God would get me to consent to taking this step, but we all feel that the Lord has a right to do as he thinks best with his property.

There is one thing more,—If we get the money where we expect to, it will be to their interest to defend the property, and it will have to be defended one of these days, and it will take money, and a lot of it.

We think we can see the wisdom of God manifest in this move, for it will be the means of preserving that property, and also of getting our position before the

people in Utah, and many of them will come out of the evil practices and return to Zion with songs of ever lasting joy. I have received all your letters I think, and thought I answered all your questions. Your last letter I cannot find so you will have to send me them questions again, and I will try and answer them. I have been very busy, had to write to quite a number, and may have overlooked many things, but will try and be more careful in the future. Most of the Saints are well. Sis Annie Young is very sick now, and some think she will lose her mind. We have a special conference next Saturday at two P. M., to act on this matter. We are moving very careful in this matter. May the Lord help you to see aright and strengthen you in every good work is the prayer of your brother,

C. A. HALL.

Exhibit "203," is in words and figures as follows, to wit:—

(On the margin of Exhibit "202," page 4, appears the following: "As soon as you are satisfied send us your vote for or against what is proposed.")

EXHIBIT "203."

INDEPENDENCE, 6-19-90.

131 C. E. REYNOLDS AND WIFE,

Dear Bro and Sr:—As I have a little time I thought I would write you a few lines and answer some of your questions. We have had some trouble in executing the law, but everything is working out all right. George and Melissa have their case settled. The printing of the Book of Mormon and continuing of the *Morning and Evening Star* is the work referred to. This must not go to any of the Josephites, as the Lord has kept these things from the wise and prudent, and revealed them to the Babes. The book of Mormon is to be printed in a cheap edition, so as to be sold for 15 or 20 cents apiece, so that every one can afford to buy one, and if we continue the paper that was printed here in 1832 and 1833, under the same name, we will have more grounds to claim we are the original church ordained on the 6th day of April, 1830, the work of the committee will of necessity have to consider the book of Doctrine and Covenants, and I am satisfied we cannot accept all the 1st edition. We must be consistent, and I think before we get through that all will see that it was very necessary for such a work to be done as is contemplated by the committee. The Saints are most all well. I have been sick for a day or two from overwork, but think I will be able to go to work to-morrow again. Well, this is all of importance I can think of now. Hoping and praying that we will all be led by the spirit of truth, I remain as ever your Bro,

C. A. HALL.

132 In one of the letters of C. A. Hall, that has been introduced in evidence, there is a statement in which he says, that he sent me a revelation, I do not recollect whether he sent it or not, I think it is asserted there in the paper that he intended to send it to me, I have not that revelation in my possession, do not think I have.

CROSS-EXAMINATION.

I belong to the Church of Jesus Christ of Latter Day Saints, I used to belong to the old organization. I joined the Reorganized Church about two years ago or a little over.

I belong to the church that is the Plaintiff in this case. I was bap-
133 tized in 1840. I was baptized about two years ago when I joined the Reorganized Church. Just prior to that, I belonged to what is called, or known, as the Hedrickite Church. I joined that church about the time of the first rise of it; but they cut me off after a while because I would not consent to some things they were doing. I was cut off for some time, and two years, or a little over, they concluded to receive me back into it again.

C. A. Hall was the leader of the branch at the time I was cut off, I cannot tell you the date exactly but it was between two and three years ago anyway. I guess it is on the record and the date can be shown in that way.

I mean that I would not indorse some things that they were doing. The way Granville Hedrick wrote up these doctrines was not approved by Hall, and I would not indorse any change in it, and then they cut me off or took my name off the record.

It was about two years ago that I joined the Hedrickite Church the last time. Between the time that I was cut off the first time by Hedrick, and the second time which is about two years ago, I did not attach myself to any branch, I belonged to the Reorganized Church after I was cut off the second time. I belonged to the Reorganized
134 Church before I joined it the last time, in Illinois, and I joined it again after that, have joined that church twice, I have joined the Hedrickite Church twice.

I never lived in Independence to make my residence here; but I lived in Jackson county; lived out here by Lee's Summit, thirteen or fourteen miles east of here. There is a law of the church with reference to dressing plain.

---

136 JOSEPH SMITH, being sworn on the part of the Plaintiff in rebuttal, testified as follows:—

For the purpose of showing the doctrine of the original church prior to the death of Joseph Smith the Seer, on the subject of secret oaths and covenants, I now hand the witness Exhibit "F," and ask him to read paragraph thirty of chapter two on page three hundred and ninety-five, as follows:—

And it came to pass that they did have their signs, yea, their secret signs, and their secret words: and this that they might distinguish a brother who had entered into the covenant, that whatsoever wickedness his brother should do, he should not be injured by his brother, nor by those who did belong to his band who had taken this covenant; and thus they might murder, and plunder, and steal, and commit whoredoms, and all manner of wickedness, contrary to the laws of their country and also the laws of their God: and whosoever of those who belonged to their band, should reveal unto the world of their wickedness and their abominations, should be tried, not according to the laws of their country, but according to the laws of their wickedness, which had been given by Gadianton and Kishkumen.

Now behold, it is these secret oaths and covenants, which Alma commanded his son should not go forth unto the world, lest they should be a means of bringing down the people unto destruction. Now behold, those secret oaths and covenants did not come forth unto Gadianton from the records which were delivered unto Helaman; but behold, they were put into the heart of Gadianton, by that same being who did entice our first parents to partake of the forbidden fruit; yea, that same being who did plot with Cain, that if he would murder his brother Abel, it should not be known unto the world. And he did plot with Cain and his followers, from that time forth. And also it is that same being who put it into the hearts of the people, to build a tower sufficiently high that they might get to heaven. And it was that same being who led on the people who came from that tower into this land; who spread the works of darkness and abominations over all the face of the land, until he dragged the people down to an entire destruction, and to an

everlasting hell; yea, it is that same being who put it into the heart of Gadianton, to still carry on the work of darkness, and of secret murder; and he has brought it forth from the beginning of man, even down to this time.

And behold, it is he who is the author of all sin. And behold, he doth carry on his works of darkness and secret murder, and doth hand down their plots, and their oaths, and their covenants, and their plans of awful wickedness, from generation to generation, according as he can get hold upon the hearts of the children of men. And now behold, he had got great hold upon the hearts of the Nephites; yea, insomuch that they had become exceeding wicked; yea, the more part of them had turned out of the way of righteousness, and did trample under their feet the commandments of God, and did turn unto their own ways, and did build up unto themselves idols of their gold and their silver.

Q.—I will now hand you Exhibit "E," Mr. Smith, and ask you to read section fifty-eight on page one hundred and eighty-six, being a
137 revelation given to Joseph Smith, Junior, and Sidney Rigdon, December, 1830, as follows:—

Behold I say unto you, that it is not expedient in me that ye should translate any more, until ye shall go to the Ohio: and this because of the enemy and for your sakes. And again, I say unto you, that ye shall not go until ye have preached my gospel in those parts, and have strengthened up the church whithersoever it is found, and more especially in Colesville: for behold they pray unto me in much faith.

And again a commandment I give unto the church, that it is expedient in me that they should assemble together at the Ohio, against the time that my servant Oliver Cowdery shall return unto them. Behold here is wisdom, and let every man choose for himself until I come: even so. Amen.

A.—I understand from the history of the church that the translation referred to in the revelation just read is the Scriptures, the Bible. The Book of Mormon had already been translated and published; it was published in 1829, or 1830. Paragraph fifteen, section thirteen of exhibit "E," on the same subject is as follows: Section thirteen, paragraph fifteen, reads thus:—

Thou shalt ask, and my scriptures shall be given as I have appointed, and they shall be preserved in safety: and it is expedient that thou shouldest hold thy peace concerning them, and not teach them until ye have received them in full. And I give unto you a commandment, that then ye shall teach them unto all men; for they shall be taught unto all nations, kindreds, tongues and people.

The last paragraph I read is a revelation given February, 1831, to the elders of the church who assembled themselves together.

The translation of the Scriptures was a work reserved, that afterwards came into my possession. I mean the Inspired Translation.
138 The manuscript was kept in the possession of my mother until they were delivered by her to a committee of the Reorganization for publication.

The committee was Israel Rogers, Ebenezer Robinson, and Joseph Smith. The manuscript was delivered into my hands by my mother. It was delivered to me for the committee by my mother. It was in manuscript and it was published as it was received. The publication is called the Holy Scriptures. The "Inspired Translation," it is usually called by us in referring to it. That publication was introduced when I was on the witness stand before and marked Exhibit "D." My father was killed June 27, 1844. I would have been

twelve years old in the following November. I remember when he was killed. He lived at that time at Nauvoo. He had lived there several years before he died. He lived in Nauvoo, from the fall of 1839, until the day of his death.

139 That was his place of residence during all that time, but he was away occasionally on short visits.

I lived there with him; my home was there with my mother and father. I slept in the room adjoining the room where my parents were. My father slept when he was in Nauvoo, at his private house, known as the Nauvoo Mansion, or hotel. We lived a part of the time in the old house which was built by Hugh White, and afterwards purchased by my father, and afterwards the mansion was built and he lived there, moved there, and lived there nearly two years before his death.

1 I remember of no one but my mother, my brothers, and myself who slept in the room with my father, and the room where the rest of the family slept, except, sometimes, an adopted sister, when the house would be crowded, and sometimes when we had the house full of visitors.

The family sleeping appartments were right together. The children slept in the room adjoining their mother and father's sleeping room. They were adjoining rooms with an open door between.

1 We always had family prayers evening and morning, and the whole family would be present at evening and morning prayers; yes, sir, always.

There were never any women, by any name, during the time my father lived in Nauvoo, or at any other time or place that claimed to be his wife, aside from my mother. Never to my knowledge, and I never heard of such a thing until some time after his death.

There was nobody that stayed there around the house that my father treated as his wife, except my mother. I never saw anything of that kind. There was no one, besides my mother, Emma, who attended the funeral as one of the mourners, as one of the family
140 mourners, I mean of course any other woman, the rest of the members of the family attended.

After my father's death his body was laid out in the room, and people came to visit it, and they were all mourners, but my mother was the only woman there as a mourner in the capacity of a wife.

The people who came in there to view the body were simply members of the church, and the friends of the family. I knew Lucy Walker; she was afterwards Lucy Kimball; she was at my father's house in Nauvoo, at one time. There as a hired girl, and going to school with the children, myself, my brother and adopted sister. My father's family of children such as they were; and it consisted of my adopted sister, my brother, and myself.

She had no other occupation there that I know of except occasionally to do a little sewing. She worked for her board and went to school. I went to school with her. She was some five and a half

years older than I was; I think that was about it, and she kind of had charge of us children, for she was older than we were. She had charge of three of us; I was well acquainted with her.

My father never treated Lucy Walker as his wife to my knowledge. Not to my knowledge did he ever treat her that way. If he had ever done so, I would have known it, if it was anything like marked attention.

I had the opportunity of knowing, as much so, as a boy of that age could know, in a household as circumscribed as ours was.

By "circumscribed," I mean that the house was not overly large, and the members were known to every one in it, and their whereabouts, and I knew every one that was in it at all times, that is those who were in the house, excepting the strangers that might be in it for the time being, as we kept a hospitable house.

There were six rooms in the house where my father lived that he occupied just before his death; the others were rented. He had lived there nearly two years. That was the mansion house. Before
141 he moved into the mansion house we lived in a house that he bought from Hugh White.

The Mansion House had four rooms, two above and two below, and a stairway between them, and an addition of family rooms, containing four rooms, two below and two above, and afterwards there was an addition put on to it that had ten sleeping rooms, four double rooms and six single rooms, over a dining room, and kitchen, and cellarway, the outer one of these rooms was used as a kitchen; that would make seventeen or eighteen rooms counting the kitchen, in all. That was in what was known as the hotel or Mansion House. I cannot tell who occupied the ten sleeping rooms, for they were strangers principally. There might have been some portion of the family at some times occupying the sleeping rooms, but they were mainly occupied by transients or boarders, for they were not what we called the family rooms.

There were no rooms in that Mansion House, or hotel, that were set apart for washings or anointings, or for any secret purpose whatever. There was never any of them used for that purpose that I know anything about. I was over the hotel and in all the rooms frequently, and if there had been any such rooms as these in the building I think I should have known it. I think I should have been apt to have known it. There were no such rooms in either house.

In the old house that my father lived in before he lived in the
142 Mansion House or hotel, there were seven rooms exclusive of the hallway. None of these rooms were set apart or used for anointings or washings, or any secret purposes that I know anything about, and I would have known it if they had been.

Lucy Walker who was afterwards known as Lucy Kimball, was at my father's house going to school before we moved into the Mansion House or hotel. It was when we were in the old building, before we moved into the Mansion House. That would be two years, or

nearly two years before my father's death, possibly over two years.

I think after we moved into the Mansion House she was employed for a short time as a dining room girl. I do not know how long it was, not for a great while.

The whole Walker family were employed around the place, in one way or the other. Their mother was dead at the time, and Lucy and her brothers, William and Loren, were there. Her brother Loren was employed for a number of years by my father. I knew the whole family from the old gentleman down to Henry.

Lucy Kimball or Lucy Walker was not living at my father's house at the time he was killed.

After my father died my mother continued to live in Nauvoo in the same house. I would not undertake to say how long she lived there. She rented the house to William Marks for a part of the time, and afterwards she rented it to a man by the name of VanTuyl. She lived there in Nauvoo, just across the road from the Mansion House. She never lived any other place in Nauvoo, except these two places.

I met with these people after my father died. There never was any claim of any kind made, from the time my father died, up to 1846, by any of these women, Lucy Kimball, Lucy Walker, or by any other woman, except Emma Smith, that they were the wife of my father. There was no claim of that kind ever made to my knowledge. I do not believe there ever was any such a claim made. I never heard of any such a thing until after the year 1846. It might have been in the spring or summer of 1846 that I heard it first.

Q.—Now, in the Mansion House or hotel in which your father lived for about two years before his death, I will ask you what the fact is about your mother's rooms in which she slept and did her work, what work she did, being arranged for the purpose of giving anointings, or washings?

A.—There was nothing of the kind. I never saw anything of the kind performed in my mother's rooms, I never knew of any arrangements looking towards that end, in the rooms of my mother. I slept in the adjoining room to my mother, unless I slept in the room with my father and mother, and I never heard of anything of the kind. We slept there all the time, for my mother never allowed us to sleep away from her very far until after father's death.

I knew the Lott family; they lived two miles and a half east on my father's farm which they rented from my father. They lived in Nauvoo, but not before my father's death. Their father's name was Cornelius P. Lott; he had a daughter by the name of Melissa. I knew the whole Lott family. There was John, Mary, Martha, and Melissa, and Alzina and Peter, and I am not sure but what there was another one, but I am not sure as to what her name was, for I do not remember it.

I saw Melissa Lott about six or seven years ago, I saw her in the fall of 1885, at the Town of Lehi, in Utah Territory. Her name now

is Willis, I believe she married a man by the name of Ira Willis, at least it is reported that she did.

144 *Q.*—In the testimony of Melissa Willis, formerly Melissa Lott, she makes the statement that in a conversation with you at Lehi, in the Territory of Utah, some years ago, she claimed to be your father's wife, and lived with him as such in Illinois. Now what are the facts with reference to that conversation, if there was ever such a conversation?

A.—If you will pardon me, I will say that in my crusade against polygamy it had been stated that I would not dare to face Mrs. Willis; and when I went to Lehi, preaching, she was in the congregation the first evening, and I secured an introduction to her and asked her for an interview, and went the next day at ten o'clock to see her in Lehi. That was in the latter part of October, 1885. I called on her again on my way back when coming up from the south. I just merely called on her to say, "How do you do?" These two visits were the only ones I ever made to her in Utah. Having known her in my boyhood I was anxious to see her, and if possible find out what connection there was between herself and my father, and I had a conversation with her in which she did state that she was married to my father, but she stated also that she did not live with him as his wife. I asked her the reason why she had not lived with him as his wife, and she said she did not think it was necessary. I asked her a number of questions, and she did not state that she had lived with him as his wife, but on the contrary distinctly stated *that she did not live with him as his wife.* I asked her if he ever treated her as a wife, and she suggested that he *did once*, but nothing came of it. And I asked her why, (if she was properly married,) the relation was not continued, and she said she did not think it was right. I asked her then if this took place in the Mansion House or in the old house, and she said that nothing ever went on in the Mansion House, or in the old house. She said that nothing of the kind ever took place there, and then I asked her or stated to her, that it had been said that he had several wives living there with him in the

145 Mansion House, and she said it was not so, that nothing of the kind was carried on there, or permitted at all. Of course it is impossible for me to remember all that was said or passed between us, but that was the substance of what passed between us at that time and place.

Q.—What if anything was said, in those conversations, or either of the conversations between yourself and Melissa Willis, with reference to your mother, or a statement made by your mother.

A.—Well, after asking her these questions, I asked her if my mother knew of this marriage, that she alleged had taken place, between herself and my father. I asked her if my mother knew that it had taken place or was aware of it in any way, and she said that mother was,—that she had given her consent to it; and then I asked her the question as to whether my mother was a truthful woman; whether she was a woman that would tell the truth, and she said she

would; that that was her character, and then I said: "Suppose my mother should make to me a statement in answer to a question, could I rely on what she said?" She replied, "You can, for if your mother told you anything you can believe it to be true;" and then I told her that my mother, in answer to my question, had stated that my father had no wife but my mother, Emma, and that he had never had any other woman in any sense as his wife with her knowledge and consent. And then this woman, Mrs. Willis, looked at me, and she said: "If your mother told you that she knew nothing about it." I then told her that my mother had made that statement to me specifically, and she said: "You can rely on it then, your mother knew nothing about it."

After this conversation with Melissa Lott, her sister, Mary, and her sister, Alzina, came into the room. They heard I was there, I suppose, and they came into the room to see me, and we fell into a general conversation. Of course I did not question the woman directly any more, but in the course of the conversation I turned to Mary and asked her if she knew "where I could find my brothers and sisters there in the Territory, for it was reported that I had a good many mothers there in the Territory, and I would like to find some brothers and sisters, for I was kind of lonesome." Mary remarked that she had hunted the whole Territory over for them, and went every place where there was any report of the kind, and she could
146 find no children. Then Alzina spoke up and said: "No, Brother Joseph, I do not believe there is any chance for any." And then I turned to Melissa Willis and said: "You hear what your sisters say, what have you to say to it?" Mrs. Willis immediately remarked in answer to my question that she thought the girls were right, and I said: "I thank you, for I think that gives the case away."

The conversation was rather general after the girls came in, and having known them so well in the early days I felt free to converse with them as I would with those I had known for years. I was under no kind of disinclination to talk with them, for they were very friendly, and we talked in a friendly way.

There is no rule, doctrine, or teaching, tenet, rule, order, or obligation, in the Reorganized Church of Jesus Christ of Latter Day Saints, of which I am the President, which authorizes or countenances in any way, shape, or form any secret oaths, ordinances, obligations, or any such thing as part of its faith and practice, and the duty of its members. There is nothing of that kind, not a thing; the only obligation imposed by the church is the one taken at baptism.

Q.—Is there any such teaching in any of the original books of the church, or records of the church, especially in 1830, the time the church was established, and from that time until 1844, the time of your father's death.

A.—None that I know of; I know there is none in the books. It may be in the records, but I do not know about it if it is. There has none of the records of the church between 1830 and 1844 come into

my possession, that teaches or authorizes any such practices, therefore I know nothing of the kind. There is nothing in the books of doctrine of the church that would permit such a thing, not as a church obligation or enjoined as a duty upon the members of the church.

CROSS-EXAMINATION.

I was asked concerning the manuscript of the Inspired Translation of the Bible, about its possession, and about its having been
147 turned over to a committee, and about its publication. As I understand it, it is a translation and correction of the Old and the New Testaments. I mean the Old and the New Testaments, commonly called the Bible, and I said it was a translation and correction, (just as it is stated in the preface,) of the Old and New Testaments, excluding the songs of Solomon and the Apocrypha.

I understand the translation to have been made by my father. I do not know whether I was correct when I denominated it a translation and correction; I only know what appears in the preface, and I give it to you as I found it, I only give it as it came into my hands.

I am acquainted with its contents and what it purports to be, so far as the using of it and the reading of it from time to time is concerned. I am reasonably familiar with it, but I would not say that I am as familiar with it as some might be with the Bible. I understand it to be as I have stated a correction and translation of the Old and New Testaments as translated by my father. It was finished in 1833, and it came into my hands or possession some time prior to the date of its publication, in 1867, with others of the committee.

I cannot tell you whether my father was a Hebrew or Greek scholar; I know nothing about it only from hearsay. I do not know of any revelation purporting to have been given through my father, commanding him to write out the Holy Scriptures by the Spirit of
148 inspiration, unless mention is made of it in some of the revelations we have already read.

There was nothing to indicate that this translation of the Holy Scriptures, as the committee received it from Emma Smith, was finished before the death of my father, except the fact of its being completed so far as we could discover when we came to examine the matter. All that came into our hands appeared to be completed.

I have not stated anything about when I first saw the manuscript from which this publication was made. I will say now, however, that I first saw it to read it when it came into my hands, or the hands of this committee, a few months before the date of its publication in 1867. I had seen the bulk of it, so to speak, in my mother's possession at different times before that, but never to look at it, or read it. The manuscript purported to be, what it was, a correction and translation of the Old and New Testaments, just as we have it here in this volume called the Inspired Translation of the Holy Scriptures. I meant by corrections, that there were corrections in the text.

149 We published it just precisely as we found it, everything just as

we found it, allowing for the ordinary mistakes of humanity, printers, proof-readers, and such.

152 I am acquainted with the Book of Mormon to some extent. There are quotations from the Scriptures in the Book of Mormon, especially from the Book of Isaiah; that is quotations found in the Book of Mormon purport to be quotations from the writings of Isaiah. A good many, I know, are to be found in the King James' translation, or is identical with what is found in the King James' translation, and many of them correspond with the language used in the Inspired translation, that is, they correspond so far as the quotations agree in each of the three books.

153 I do not know that the Inspired translation was adopted by the Reorganized Church, although it may possibly have been in the fall of 1879, but I could not say positively as to that.

My authority for the statement that the Inspired translation was completed in 1833, is the reported history of my father published in the *Times and Seasons*. I do not know whether that is authentic or
154 not, but it purports to be. I stated at the outset that I understood it was completed in 1833, but I did not know it of my own knowledge, as a matter of course; from the very nature of things I could not know it to be the fact.

155 The committee that published the Inspired translation obtained the manuscript from my mother, Emma Smith; I was a member of that committee, and it was delivered to me in person by my mother. Her name was not Smith at the time that I obtained it from her; her name was Bidamon. I do not know the date that I received it, although I could easily have obtained it if I had known you wanted it. I think it was in the fall of 1867.

We went to work on it at once; we were at work on it for some time before it went into the hands of the printers in Philadelphia; myself, Ebenezer Robinson, W. W. Blair, and the clerks we employed were working at it. We recopied it, made a copy of it for the printers. a verbatim copy, so far as we possibly could do it. We made the copy in manuscript, for we had no typewriters then as we have now. It was copied in handwriting, by that committee, or by persons employed by the committee.

156 When we received the manuscript from my mother it was secured in a bundle by itself, wrapped up with covering on it. I do not know that there was any specific seal on it, but there may have been wafer seals on the outside of the cover, and if so they may have been broken.

I cannot say that I know of any specific authority by which she had it in her custody, or how she was made the custodian for it.

157 I know what she said about delivering it to the committee; she said that she had been entrusted with it, and she kept it as faithfully as she could, and she was glad to be relieved of its care, and she believed that she had put it into the right hands, and that the time had come for it to be published; that is what she said.

The reason that it was applied for, through the committee, there was a resolution passed through the conference authorizing the appointment of a committee to apply for it, and to publish it if it could be obtained.

159 I said in my examination last February, as I do now, that that which purports to be revelation before they can become binding as matters of law to the church; the rule is, that they be submitted to the quorums and receive their approval. That is what I stated then, and that is what I state now.

Matters presented to the conferences may be adopted by them, and thereby become standards of reference in the settlement of disputes or controversies, that may not even be in the form of revelation, and in that way they become binding upon the church. If they have the effect upon the church of changing its organization, rules, or laws, or anything of that kind, they have to be submitted to the church. Conferences may adopt resolutions governing its work, and a resolution so adopted is binding upon the conference, but not binding as a revelation, and it is not binding upon the church for the reason that it has not been submitted in the way that a revelation has to be submitted, or anything that has the effect of changing the laws or rules of the church or affecting a question of doctrine.

We regard the Inspired Translation, and take it for just what it purports to be, a correction and translation of the Old and New Testaments by the Spirit of inspiration, by Joseph Smith, and place it side by side with the Book of Mormon and the Book of Doctrine and Covenants.

We do not consider it infallible, nor do we consider the Bible infallible. We do not consider anything that passes through human hands to be infallible. We do not believe in the plenary inspiration of the Bible, and therefore we do not believe it to be infallible. Understand me, we hold that everything which passes through human hands is fallible. We do not believe that anything that passes through human hands must necessarily be perfect, therefore we hold that everything that passes through human hands is mutable, and therefore not infallible.

That is our view regarding the Book of Doctrine and Covenants which we have adopted; now let me illustrate: In the Inspired Translation we find in the New Testament Scripture, this kind of a thing: In reference to Jonah being three days in the belly of the whale, it says: "As Jonah was three days in the heart of the whale, so shall the Son of Man," etc. Now that is manifestly an error that it is not necessary to believe, and we therefore do not believe in it. That is in the new and Inspired Translation. It certainly is not correct; it is a typographical error. We examined to see where that error arose, and it was not in the manuscript or the copy that was furnished the printer, but it was an error in the proofreading. It was an error of the printer that set up the type that escaped the proofreader. We do not hold that the original manuscript from which

the Inspired Translation was made was infallible, we do not hold anything to be infallible that passes through human hands, for they are all subject to human mutations. That is the translation and correction of the Old and the New Testament made by Joseph Smith through the gift of inspiration. Now to show you that human error has crept into even the King James' Translation. There is one place where it tells you that the disciples were all out on the water, and they were filled with water, and if that is so, they were in a
160 queer fix. If they were filled with fear it would be a different thing, but it says they were filled with water. Now you would not say that the Bible was infallible in that respect.

Now, in another place it says that they arose up in the morning, and it says that they were "dead corpses," and in another place in Isaiah it says: "I will send then a servant that is blind and deaf." That is not infallible.

1 161 I only quote these instances to show that everything that passes through human hands is mutable and cannot be considered as infallible, and to that end, I could go on and offer further proof if it was necessary.

As a further instance, there is another place in the King James' translation where it states that, a son began to reign two years before his father.

There may be errors of that kind in the Inspired translation and if there is, they are fallible, for they are the result of human agency, and therefore fallible, and for these reasons I hold that anything that passes through human hands is liable to error, and therefore fallible.

With reference to the plates from which Joseph Smith translated the Book of Mormon, I will say this, that the plates say themselves that if there are errors in them they are the the errors of men, and I would say the same of the original manuscript from which the King James' translation was made.

So far as our action or allegiance to any rule or doctrine of faith or practice is concerned, so far as anything comes to us, and is accepted by the church, as a rule for its guidance either in faith or practice the matter of fallibility or infallibility does not enter into the question. There is no tribunal this side of the judgment seat of
162 God that can determine whether anything is true or not true absolutely; but when anything is accepted, of course it is binding upon the church, although we do not attempt to pass upon the question of its fallibility or infallibility.

We simply decide these matters according to the light that is given to us, and we are liable to be in error, for we recognize that this side of the judgment seat there is no tribunal that can decide that matter.

Men belonging to our church profess to receive revelations, but they are not considered infallible. If they are received through any person and they purport to be revelations from God, we examine

and compare them with what we have received on the same subject, or what is in the Bible, the Book of Mormon, and the Book of Doctrine and Covenants; and if we find that it is not at variance with anything there, and if they are received then as revelations from God, then they become binding upon us as a belief, and we conform to it; that is, we take it and give it the same force as the statute law.

We take them without reference to their fallibility or infallibility. We do not attempt to decide that, for the fallibility or infallibility of its character is to be determined by and by.

That which is presented to us as a revelation from God is examined, and if in our opinion it be subversive of that which has been received before as a revelation from God and accepted as the doctrine of the church, then it is rejected; we take the risk of rejecting it in that case, although it may be from God.

It does not derive its authority from the fact that it comes to us as a revelation from God, it derives its authority from our acceptance of it, in other words its authority and force as a binding mandate upon us derives its authority from our acceptance of it, authority merges in it upon our acceptance, and not until then.

163 I have never known of a case where a member of the church was disciplined for belonging to secret organizations, I will say this, that there is no such a practice authorized or sanctioned by the church at all. The church does not propose to interfere with the privileges and desires of its members in that respect. If they choose to belong to the Masons, or Odd Fellows, or any other secret organization, they are at liberty to do so so far as the church is concerned.

That is their privilege and they can belong to the Knights of Pythias or any other organization as long as they preserve the rights of citizenship and general good conduct, the church does not propose to interfere with them for belonging to any of these orders.

I have never known of a case where it was necessary to discipline them for belonging to these organizations. It is simply a question of personal privilege which the church does not propose to interfere with.

The church as far as that is concerned neither teaches nor endorses, nor sanctions nor condemns these secret organizations, it stands perfectly neutral on that question.

164 No, sir, we do not recognize a doctrine as authoritative which prohibits the revealments of certain things to the world at large, I know of nothing that prevents me from telling everything I know to the world on proper occasions, that applies to everything that was or is practiced in the church, so far as I have any knowledge of it, no man has ever been asked not to answer a question, or charged not to reveal anything he knows in regard to the church or its doctrines, practices, or organization, neither is there a rule of the church that puts a stopper on the tongue of any man or his conscience.

If there was any rule or practice of the church in regard to anoint-

ing the head with oil, or practice or form prescribing a certain kind of dress to be worn or anything of that kind and it was prohibited, there would be a penalty attached, but as there is no such rule there consequently is not any penalty.

There is no such rule that I know anything about, further than the Doctrine and Covenants says, "Let your garments be clean, and the ornamentation thereof the work of your own hands."

There is no rule that requires any person in an initiatory ordinance to wear any particular kind of a garment, or to be ordained in any particular kind of dress made after any particular fashion. We read the command of the Savior to his disciples, and accept it for just what it purports to be. That is what we do, for there is no rule amongst us in reference to it at all.

Of course we accept the teachings of Christ as authority, and we are not disposed to state that that which came from the Saviour is
1 165 fallible. Christ is the only lawgiver. We do not claim that he is fallible, but we do claim that a translation of his commands or words that came through human hands, that the version we have of it in so far as it has been affected by human agency is fallible, or may be fallible.

There is a statement in the book of Covenants that certain things that they had amongst them at the time, were not to be revealed. I do not know whether I recognize that statement as authoritative law of the church, if I knew what the specific things are that were thus prohibited I would know.

Q.—You have been inquired of, with reference to what you knew as to your father's conduct and habits, while you were a boy there in Nauvoo?

A.—Yes, sir.

Q.—Well for that reason, may I not, with your approbation, pursue the inquiry a little further?

A.—I have no objection, sir, for I am here to answer any question you may ask me.

Q.—Mr. Smith will appreciate the feeling which prompts me to ask the question in that way?

A.—Well, Colonel, you will understand that I have no feeling in the matter, so proceed with your inquiry without regard to my feelings for I have none whatever in the matter, I am here to answer every question that is legitimate, or that has any bearing on this case in any way, shape, or form. I will answer any question you put to me that meets with these requirements.

Q.—Well I ask you if it is not a fact that if your father indulged in
166 the practice of polygamy; or these practices, that he would have taken special pains to have concealed it from you, that he was indulging in these practices.

A.—I cannot answer that question, Colonel, for anything I would say on that subject would be merely my opinion. I certainly think that he would display wisdom who engaging in practices like that

would conceal it from his family. I would consider it an evidence of caution in him to do so that would be commendable at least as evidencing his desire to avoid trouble over the matter.

I know that if I was doing anything like that I would try and keep it from my boys, for I would not want them to know anything of the kind, especially the elder ones. I certainly would not want them to know anything about it. I have no other answer to make than I have made. I know what I would do about it.

Q.—You need not put it in the form of a presumption, for would you not state it as a fact from what you know of the shrewdness and ability of your father, for taking these things into consideration would not the course you have stated as being the one you would pursue, be the one that he would follow.

A.—I will tell you Colonel that so far as my knowledge goes, there was never anything of the kind known in the the family, and I will say further that I believe that it is absolutely impossible for such things to have been without my knowing it. I have before stated that and it is a fact. I do not believe there ever was such a
167 thing dreamt of even before my father's death, and for that reason any other answer that I might give would be merely supposing a case which I am convinced never had the shadow of foundation.

I cannot say what would be the action or judgment of my father in keeping it a secret, I simply state that such a thing was never known in the family, or even dreamt of, and what his motives were in keeping it a secret, supposing he actually practiced it, is something I am unable to state.

What might have been his methods and motives of concealing it from his family, or keeping it a secret so the family would not know anything about it, I am not prepared to say, assuming of course for the sake of argument that he actually practiced it and kept it a secret from his family.

Q.—Now what I am inquiring about is whether the presumptions are not all against your having any knowledge of these transactions on the part of your father?

A.—I think not, I cannot see it in that light Colonel. You asked me for my presumption, and my presumption is that the absolute absence of any knowledge of that kind on the part of his family, leads me to believe that there is nothing in it, and that there is no truth in fact in it.

Q.—Well now assuming that he was guilty of these practices, is it not a reasonable presumption that your father would have concealed it from his family.

A.—No, sir, not under the conditions alleged, for it is charged that his wife knew of it and consented to it. I will say also that if he did do so he was successful in concealing it from his wife and family.

Melissa Lott lived at my father's house before his death about eight or ten months, as near as I can remember she would be some-

where from eighteen to twenty-two years old, she did some work
170 there, boarded there, and went to school about ten months. I think it was pretty close towards the close of his life that she was there.

Lucy Walker was there at my father's house, when she lived there she was somewhere from fifteen to sixteen years old. I think she was five and a half years older than I was. I think she was there about a year and a half or something like it, she was with us when we lived in both houses. She was there at the time we left the old house and moved into the Mansion House. I remember that she did dining room work there in the Mansion House.

She left my father's house some little time before his death, I cannot say as to exactly the time, but it was some little time before my father's death, she was about seventeen when she left, soon after my father's death they left Nauvoo. I think it was in the spring of 1846, I cannot tell you when she married Kimball,

1 I knew Emily and Eliza Partridge, I think they lived at my fath-
171 er's house, but that is not so steadily in my memory as Lucy Walker, but I recollect they stayed there. Eliza was old enough to be called an old maid, and Emily was verging on twenty-two or somewhere along there. I remember very well, they were very intelligent young women.

I knew Maria and Sarah Lawrence, or the Lawrence sisters, they never lived at my father's house that I know of, they have visited there and stayed for awhile on a visit, I remember seeing them there but my recollection is that they were there on a visit. I knew them very well and also knew their stepfather, mother, and brother. I do not know when the Lawrence people and the Partridge people left Nauvoo, exactly, I do not know whether they left in 1845, or waited until the exodus in 1846.

RE-EXAMINATION.

174 Plaintiff now offers in evidence from "Exhibit L," the *Times and Seasons*, Saturday, October 1, 1842, that part on page (939), commencing at the middle of the first column at the words "On Marriage," and from thence on down to the words "Abigal Works," as follows:—

"Exhibit L," above referred to:—

ON MARRIAGE.

According to the custom of all civilized nations, marriage is regulated by laws and ceremonies: therefore we believe, that all marriages in this church of Christ of Latter Day Saints, should be solemnized in a public meeting, or feast, prepared for that purpose: and that the solemnization should be performed by a presiding high priest, high priest, bishop, elder, or priest, not even prohibiting those persons who are desirous to get married, of being married by other authority. We believe that it is not right to prohibit members of this church from marrying out of the church, if it be their determination so to do, but such persons will be considered weak in the faith of our Lord and Savior Jesus Christ.

Marriage should be celebrated with prayer and thanksgiving; and at the solemnization, the persons to be married, standing together, the man on the right, and the woman on the left, shall be addressed, by the person officiating, as he shall be directed by the holy Spirit; and if there be no legal objections, he shall say,

calling each by their names: "You both mutually agree to be each others companion, husband and wife, observing the legal rights belonging to this condition; that is, keeping yourselves wholly for each other, and from all others, during your
175 lives." And when they have answered "yes," he shall pronounce them "husband and wife" in the name of the Lord Jesus Christ, and by virtue of the laws of the country and authority vested in him: "may God add his blessings and keep you to fulfill your covenants from henceforth and for ever. Amen."

The clerk of every church should keep a record of all marriages, solemnized in his branch.

All legal contracts of marriage made before a person is baptized into this church, should be held sacred and fulfilled. Inasmuch as this church of Christ has been reproached with the crime of fornication, and polygamy; we declare that we believe, that one man should have one wife: and one woman, but one husband, except in case of death, when either is at liberty to marry again. It is not right to pursuade a woman to be baptized contrary to the will of her husband, neither is it lawful to influence her to leave her husband. All children are bound by law to obey their parents: and to influence them to embrace any religious faith, or be baptized, or leave their parents without their consent, is unlawful and unjust. We believe that husbands, parents and masters who exercise control over their wives, children, and servants and prevent them from embracing the truth, will have to answer for that sin.

We have given the above rule of marriage as the only one practiced in this church, to show that Dr. J. C. Bennett's "secret wife system" is a matter of his own manufacture: and further to disabuse the public ear, and show that the said Bennett and his misanthropic friend, Origen Bachelor, are perpetrating a foul and infamous slander upon an innocent people, and need but to be known to be hated and despised. In support of this position we present the following certificates:

We the undersigned members of the Church of Jesus Christ of Latter Day Saints and residents of the city of Nauvoo, persons of families do hereby certify and declare that we know of no other rule or system of marriage than the one published from the Book of Doctrine and Covenants, and we give this certificate to show that Dr. J. C. Bennett's "secret wife system" is a creature of his own make as we know of no such society in this place nor never did.

S. BENNETT,	N. K. WHITNEY,
GEORGE MILLER,	ALBERT PETTY,
ALPHEUS CUTLER,	ELIAS HIGBEE,
REYNOLDS CAHOON,	JOHN TAYLOR,
WILSON LAW,	E. ROBINSON,
W. WOODRUFF,	AARON JOHNSON.

We, the undersigned members of the Ladies relief society, and married females do certify and declare that we know of no system of marriage being practiced in the Church of Jesus Christ of Latter Day Saints save the one contained in the Book of Doctrine and Covenants, and we give this certificate to the public to show that J. C. Bennett's "secret wife system" is a disclosure of his own make.

EMMA SMITH, President,
ELIZABETH ANN WHITNEY, Counselor,
SARAH M. CLEVELAND, Counselor,
ELIZA R. SNOW, Secretary.

MARY C. MILLER,	CATHERINE PETTEY,
LOIS CUTLER,	SARAH HIGBEE,
THIRZA CAHOON,	PHEBE WOODRUFF,
ANN HUNTER,	LENORA TAYLOR,
JANE LAW,	SARAH HILLMAN,
SOPHIA R. MARKS,	ROSANNAH MARKS,
POLLY Z. JOHNSON,	ANGELINE ROBINSON,
ABIGAIL WORKS,	

177 Plaintiff now offers from the *Times and Seasons*, dated November 15, 1844, the editorial statement of John Taylor, as follows:—

For the communication of an "old man of Israel," and the letter of Elder Addison Pratt, from the islands of the Pacific Ocean, we bespeak a hearty welcome. They are genuine.

Also the following from the communication of "An Old Man of Israel," commencing in the middle of page seven hundred and fifteen in the second column of "Exhibit L," with the words, *the saints*, and down to and including the whole paragraph, as follows:—

The Saints of the last days have witnessed the outgoings and incomings of so many apostates that nothing but truth has any effect upon them. In the present instance, after the sham quotations of Sidney and his clique, from the Bible, Book of Mormon, and Doctrine and Covenants, to skulk off under the "dreadful splendor" of "Spiritual wifery," which is brought into the account as graciously as if the law of the land allowed a man a plurality of wives, is fiendish, and like the rest of Sidney's revelation, just because he wanted "to go to Pittsburg and live." Woe to the man or men who will thus wilfully lie to injure an innocent people. The law of the land and the rules of the church do not allow one man to have more than one wife alive at once, but if any man's wife die, he has a right to marry another, and to be sealed to both for eternity; to the living and the dead. There is no law of God or man against it. This is all the spiritual wife system that ever was tolerated in the church, and they know it.

Plaintiff now offers from the *Times and Seasons* published Thursday, February 1, 1844, volume five, page (423), from "Exhibit O," the notice, commencing at the bottom of the page in the first column, and ending at the top of the second column, as follows:—

NOTICE.

As we have lately been credibly informed, that an elder of the church of Jesus Christ of Latter Day Saints, by name of Hiram Brown, has been preaching polygamy, and other false and corrupt doctrines, in the County of Lapeer, State of Michigan.

This is to notify him and the church in general, that he has been cut off from the church, for his iniquity; and he is further notified to appear at the special conference, on the 6th of April next, to make answer to these charges.

JOSEPH SMITH.
HYRUM SMITH.
Presidents of said Church.

We also offer from the same exhibit under date of Monday, April 1, 1844, on page (490), from the middle of the first column commencing with the words, "To the Elders abroad," down to and including the word "principles," in the first column of page (491), inclusive, as follows:—

TO THE ELDERS ABROAD.

We very frequently receive letters from Elders and individuals abroad, inquiring of us whether certain statements that they hear, and have written to them, are true; some pertaining to John C. Bennett's spiritual wife system; others in regard to immoral conduct, practiced by individuals, and sanctioned by the church; and as it is impossible for us to answer all of them, we take this opportunity of answering them all, once for all.

In the first place, we cannot but express our surprise, that any elder or priest who has been in Nauvoo, and has had an opportunity of hearing the principles of truth advanced, should for one moment give credence to the idea that anything

like iniquity is practiced, much less taught or sanctioned, by the authorities of the Church of Jesus Christ of Latter Day Saints.

We are the more surprised, since every species of iniquity is spoken against, and exposed publicly at the stand, and every means made use of that possibly can be, to suppress vice, both religious and civil; not only so, but every species of iniquity has frequently been exposed in the *Times and Seasons*, and its practicers and advocates held up to the world as corrupt men that ought to be avoided.

We are, however, living in the "last days," a time when the scriptures say, "men shall wax worse, and worse; deceiving, and being deceived," in a time when it is declared, "If it is possible the very elect should be deceived." We have in our midst corrupt men, (and let no man be astonished at this for "the net shall gather in every kind, good and bad;") these corrupt men circulate corrupt principles, for a corrupt tree cannot bring forth good fruit; these spread their
178 pernicious influence abroad, "they hatch cocatrice's eggs, and weave the spider's web; he that eateth of their eggs dieth, and that which is crushed breaketh out into a viper," their words eat as doth a canker; "the poison of asps is under their tongue, and the way of peace they have not known." Such men not unfrequently go abroad and prey upon the credulity of the people, probably have clandestinely obtained an ordination, and go forth as elders, the more effectually to impose upon the public. Some have got horses and others money, under specious pretenses, from the unwary and unsuspecting among the newly formed branches who have not had the sagacity to detect them.

There are other men who are corrupt and sensual, and who teach corrupt principles for the sake of gratifying their sensual appetites, at the expense and ruin of virtue and innocence. Such men ought to be avoided as pests to society, and be frowned down upon with contempt by every virtuous man and woman.

All of the above of whatever name or nature, are "reprobate concerning the faith;" if they write they write corruptly; if they speak they speak corruptly. They are such as the apostle speaks of, they speak "great swelling words, having men's persons in admiration."—They are high and lifted up, and would trample upon the humble and meek, and the unassuming, and are not afraid to teach for the commandment of God their own corrupt and devilish doctrines, and principles; let no man therefore, be deceived by them, let no man harbor them, nor bid them God speed; do not be partakers of their evil deeds.

If *any man* writes to you, or preaches to you, doctrines contrary to the Bible, the Book of Mormon, or the Book of Doctrine and Covenants, set him down as an impostor. You need not write to us to know what you are to do with such men; you have the authority with you.—Try them by the principles contained in the acknowledged word of God; if they preach, or teach, or practice contrary to that, disfellowship them; cut them off from among you as useless and dangerous branches, and if they are belonging to any of the quorums in the church, report them to the president of the quorum to which they belong, and if you cannot find that out, if they are members of an official standing, belonging to Nauvoo, report them to us.

Follow after purity, virtue, holiness, integrity, Godliness, and every thing that has a tendency to exalt and ennoble the human mind; and shun every man who teaches any other principle.

---

179 W. W. BLAIR, being sworn on the part of the Plaintiff in rebuttal, testified as follows:—

I have been sworn and have testified heretofore in this case. I am acquainted with Jason W. Briggs, whose deposition was taken in this case on the eighth day of June last at Denver, Colorado. I

have read a small part of his testimony this morning, from what purported to be his deposition presented to me by Mr. Orr, who is now taking my testimony, and who also took the testimony of Mr. Briggs.

I read that portion of Mr. Brigg's testimony that referred to a purported lodge meeting, or priesthood meeting, in which he says there was a purported revelation read by William Smith, and that I was present. I should say it was read, in the presence of William Smith, in the lodge meeting or priesthood meeting, and that Briggs and myself were present. From what I understand from reading the testimony, it would be in October, 1851, at a place called Palestine, in the vicinity of what is now called Amboy, in Lee county, Illinois.

From his testimony the purported revelation, he referred to, was something that related to polygamy or plurality of wives; that is what I should judge it to be, judging purely from the testimony which I read. I think he gave the date as October, 1851.

I never attended any meeting of that kind or anything that bore any relation or resemblance to it, that I can recollect anything of, and I think I would remember. I never attended any meeting of that kind, that I am aware of.

Now in the winter afterwards, there were meetings held and they dubbed them lodge meetings: that is, some of them called them lodge meetings. The meetings were for the purpose of discussing matters in regard to theology, and church government, and such like, and those meetings while they were confined principally, to the ministry, and possibly entirely, nevertheless there were others permitted to become members, and I do not recollect that there was anything secret about it; so that it could be called secret meetings, or anything of that kind, but in that sense it was misnamed for it was not a lodge, they were meetings of the ministry, but they permitted the membership to be present, at least to some degree.

I was never present at any of these meetings that I remember anything of until in November or December, 1851, and possibly later than that. I united with that body of people I think on the eighth of October, I think it was the last day of their conference, and at that time of course everything was comparatively new to me, their teachings, doctrines, and church government and matters of that kind, were all new to me, that is the time I joined the church.

I had nothing to do with the church before that time, before that time I had simply been an investigator, and had been for some little time. There was only a small congregation of them there, and they were under the presidency of William Smith. They were Latter Day Saints under the presidency of William Smith.

I say that there never was a revelation read to any meeting at which I was present. There never was a revelation read to any

meeting in my presence at any time or place while I was associated with William Smith. There was never such a thing read or presented at any meeting, at which I was present, either publicly or privately or in any other way, and I never saw any such a document, or heard it read, nor did I ever hear of one.

And so far as my memory serves me, I never heard of one, having any connection with that body of people or with William Smith, until some time afterwards.

Perhaps in June or July, 1852, I heard at that time, for there was a rumor abroad, that Joseph Wood and William Smith had something to say in favor of sealing or a plurality of wives. I heard about that but I never saw the revelation or a revelation purporting to come from William Smith, or Wood, either.

I do not think I ever heard of one until 1852, and that was pretty nearly a year after the time that Briggs speaks of in his testimony. I do not think I ever heard of a revelation prior to July, 1852, coming from that source or, through one of them. I heard that there was something being said in favor of polygamy or plurality of wives, but I never heard it from Mr. Smith at any time.

I heard it first simply as a rumor. I think it was from Alva Smith, that was residing in Dickson, Illinois. That is the county
182 seat of Lee county, and I think I also heard it from Edwin Cadman. I investigated the matter to some extent to find out the truth or falsity of it, and I found nothing confirmatory of it whatever so far as documents were concerned. I mean that I did not find anything, that would teach it, coming from Smith. I did, however, in regard to Wood. That was in the summer or spring of 1852, possibly later than that.

So far as Wood's relation to it is concerned there was nothing in that beyond a letter that purported to have been written by Wood that fell into the hands of this man Alva Smith, who at one time had been a member of the church, and he showed me the letter at that time.

Wood was counselor to William Smith.

I know that soon after that time, William Smith repudiated Wood. When I withdrew from William Smith's organization, I had several reasons for so doing, and among these reasons was the one of this letter. I may say that this letter was one of the principal reasons that moved me to withdraw from his association. William Smith was understood to be the presiding officer when I withdrew. He was the brother of Joseph Smith, and is the same William B. Smith who has heretofore given his testimony in this case, as I understand it.

I first connected myself with the organization of which William Smith was the head, October eighth, 1851; and if my memory serves me correctly I remained a member of that organization until the next
183 August, not quite a year. I was an elder in that organization, I should judge in the winter after I became a member, possibly might have been in the spring following.

I had some official relations with William Smith during the time I was a member. I did writing for him, preparing matter for the press, not a great deal, however. I lived about two miles from where he resided at the time he made that his home, and I attended the usual weekly services, and we had a service in addition during the week.

William Smith attended services, and if he had taught the doctrine of polygamy, during the time that I was with him, if he had taught it publicly during any of the services that were held, I certainly should have observed it. He never taught it, at any time that I know of, if he did I do not know anything about it, never taught it either publicly or privately that I know of.

I spoke of the ordinances of sealing in the church, so far as matters of marriage was concerned, I never heard it advocated in those times, and I never saw any administrations of it, but there was a rumor passing from one to another, that such a thing, as sealing, might be had, and that it related to a person having a dead wife and a living one; that he might in that case be sealed to both by this ordinance, but I never heard it advocated in any way either privately or otherwise; but simply as a rumor that such a thing had been advocated by some, and I would not undertake to say that William Smith was in any sense the author of it.

The ordinance of sealing was not practiced at any time during my connection with the church, as organized and presided over by William Smith;—it was not to my knowledge; I repeat that I never heard it advocated publicly or privately by any official in the church, and I never saw any administration in that direction.

CROSS-EXAMINATION.

184 I have had some conversation with William Smith with reference to the testimony of Mr. Briggs given in this case. I talked with him about it to a limited extent, the conversation occurred in this city yesterday.

Q.—Did you and Mr. Smith remember these things in the same way? I mean in so far as the facts were elicited in this conversation?

A.—I could not say, but I remember distinctly that I became associated with the church the seventh or eighth of October, 1851, and having never been associated with any religious body before, it was all comparatively new business to me, and I remember distinctly of attending the lodge meeting in the winter afterwards, and perhaps in the spring following. I likewise remember that Jason W. Briggs, shortly after that conference in October, 1851, I should judge it was not more than a month, possibly less, wrote a communication to his relatives, which I learned about, stating that he had abandoned, or that he had rejected William Smith's claims to be the head of the

church, and that he had abandoned that organization. I think that occurred along in the first days of November.

185 *Q.*—My question is whether in conversation with William Smith yesterday your views and recollections were the same, with reference to this statement of Mr. Briggs, about the reading of a revelation on a given occasion?

A.—Well, as far as I am concerned, I simply remember that I never heard it, never saw it or heard of it, and he denies ever having heard or ever having seen any such a thing at any time, and he denies ever having presented at any time any such a revelation.

I do not know that there was ever one presented by his counselor Wood. I know this, if there ever was I know nothing about it. I am confident that if anything of the kind had occurred there, at this priesthood meeting, such as the presentation of or the teaching by a written revelation, or in any other way, of polygamy, or plurality of
186 wives, or anything of that kind, I should have observed it, and I know I would, and would have kicked against it.

The doctrine of polygamy was something that was imputed to the Latter Day Saints, and before I joined them I carefully examined their standard works and I saw that the doctrine and its practice was expressly discountenanced and deprecated, therefore if at any time that had been presented in any way while I was a member of William Smith's organization, or at any time that Briggs refers to, I am positive that I would remember it, and I know if it had been, I should have withdrawn from the church.

I became one of the Twelve when the church was organized under
187 William Smith in April, 1852. Jason W. Briggs was understood to be at the time I came into the church one of the Twelve, but he repudiated the church before April, 1852. To the best of my recollection he repudiated the church November, 1851. We understood at the time that Jason Briggs repudiated William Smith, because of the plurality doctrine, or the doctrine of polygamy, but we also understood at the time that he was mistaken about it, and that he had charged William Smith unfairly, and unrighteously, in that respect, as we did not think he had made a true charge.

RE-EXAMINATION.

191 *Q.*—Mr. Blair, in your cross-examination you have spoken about the question or practice of polygamy being a mooted question at the time you joined the church; now in what way was it a mooted question?

A.—Now in this way, it was generally charged by the world at large that the Latter Day Saints practiced polygamy. I examined the case as well as I could, taking the standard books and the statements of the ministry at that time connected with the church. I took these and in connection with all that I could learn I decided in my own mind that it was a mistake, that is to say it was a false charge.

The charge related to the church at every place and in every part where it existed. It was charged against all the Latter Day Saints in those times, that polygamy was their doctrine wherever they were, and on the part of the Latter Day Saints where I lived they denied it and the body of the people where I lived denied it, and the ministry, so far as I was able to judge, denied it also, and they presented the Book of Mormon and the Book of Doctrine and Covenants, and stated that it was no doctrine of the church and could not be. They claimed that it was barred out and formed no part of the doctrine of the church whatever.

That was the claim of the church that I joined. Of course I do not know of my own knowledge, but it was understood at that time, that polygamy was being practiced in Utah, under Brigham Young. We looked upon it in those days, at least, I did, after I had investigated the matter and satisfied myself as to it, that it was a slander upon the doctrine of the church, and upon the Latter Day Saints as a body, but at the same time it was quite well understood that the people in Utah advocated it and practiced it, but we considered that taking the people who styled themselves "Latter Day Saints," that to charge it to them as a whole was a slander and had no foundation in justice or in fact.

192 I regarded the imputation so far as it related to the church proper as slanderous, and a slander upon the doctrine of the church. I mean the church as it was originally founded, organized, and existed up to the time of the death of Joseph Smith, and the body of the people that I was associated with.

I believed that they represented the true doctrine of the church, and the question of succession was not raised in those days, for it was not a question about which I cared anything particularly in those times.

It was generally considered at that time that the Utah people had usurped authority and that their doctrines were corrupt. I learned more from this man Edwin Cadman in regard to that than I did from any other man.

The foregoing testimony was taken under and by virtue of a stipulation signed by the parties to this cause before John M. Orr, a commissioner appointed by the United States Circuit Court for the Western District of Missouri, Western Division at Kansas City, upon the application of both parties to this case, and that at and during the taking of said testimony, the parties to this cause by agreement entered of record, said John M. Orr, was to have such time as was necessary, to transcribe and file the testimony with the Clerk of the said Court at Kansas City, Missouri, anything in any written stipulation heretofore filed in said cause to the contrary, and that formal caption and certification of said depositions was expressly waived by

the parties to this cause and their attorneys, all of which stipulations and agreements and contracts entered into by the parties in this cause and their attorneys, before John M. Orr, now appears of record in the testimony of this case now on file with the Clerk of said Court in Kansas City, Missouri.

P. P. KELLEY,
SMITH MCPHERSON,
L. TRABER,
GEORGE EDMONDS,
E. L. KELLEY,

Attorneys for Complainant.

No.. ....

IN THE CIRCUIT COURT

OF THE

UNITED STATES,

WESTERN DISTRICT OF MISSOURI.

WESTERN DIVISION, AT KANSAS CITY.

The Reorganized Church of Jesus Christ of Latter Day Saints Complainant, vs. The Church of Christ at Independence, Missouri; Richard Hill, Trustee; Richard Hill, Mrs. E. Hill, C. A. Hall, President; Mrs. C. A. Hall, George Frisbie, Mrs. E. Frisbie, Miss Nannie Frisbie, Daniel Bauder, and G. D. Cole, as members of and doing business under the name of the Church of Christ at Independence, Missouri, Respondents.	In Equity.

RESPONDENTS' ABSTRACT OF PLEADINGS AND EVIDENCE.

P. P. Kelley,
Smith McPherson,
L. Traber,
George Edmunds,
E. L Kelley,
Solicitors and of Counsel for Complainants.

John N. Southern and
James O. Broadhead,
Solicitors for Respondents.

Filed——————————1893.

——————————*Clerk.*

J. M. ORR, Notary and Stenographer.

KANSAS CITY, MO.:
Sidney F. Woody Printing Co.
1894.

No.. ....

IN THE CIRCUIT COURT

OF THE

UNITED STATES,

WESTERN DISTRICT OF MISSOURI.

WESTERN DIVISION, AT KANSAS CITY.

The Reorganized Church of Jesus Christ of Latter Day Saints, Complainant, vs. The Church of Christ at Independence, Missouri; Richard Hill, Trustee; Richard Hill, Mrs. E. Hill, C. A. Hall, President; Mrs. C. A. Hall, George Frisbie, Mrs. E. Frisbie, Miss Nannie Frisbie, Daniel Bauder, and G. D. Cole, as members of and doing business under the name of the Church of Christ at Independence, Missouri, Respondents.	In EQUITY.

RESPONDENTS' ABSTRACT OF PLEADINGS AND EVIDENCE.

P. P. KELLEY,
SMITH MCPHERSON,
L. TRABER,
GEORGE EDMUNDS,
E. L KELLEY,
Solicitors and of Counsel for Complainants.

JOHN N. SOUTHERN and
JAMES O. BROADHEAD,
Solicitors for Respondents.

Filed——————————1893.

——————————*Clerk.*

J. M. ORR, Notary and Stenographer.

KANSAS CITY, MO.:
SIDNEY F. WOODY PRINTING CO.
1894.

IN THE CIRCUIT COURT OF THE UNITED SATES,

WESTERN DISTRICT OF MISSOURI,

WESTERN DIVISION, AT KANSAS CITY.

The Reorganized Church of Jesus Christ of Latter Day Saints,
Complainant,
vs.
The Church of Christ at Independence, Missouri; Richard Hill, Trustee; Richard Hill, Mrs. E. Hill, C. A. Hall, President; Mrs. C. A. Hall, George Frisbie, Mrs. E. Frisbie, Miss Nannie Frisbie, Daniel Bauder, and G. D. Cole, as members of and doing business under the name of the Church of Christ, at Independence, Missouri,
Respondents.

PLEADINGS.

For amended bill see Complainant's Abstract, pages 5, 6, 7, 8, 9, 10, 11.

For answer to amended bill see Complainant's Abstract of Pleading and Evidence, and note the corrections of same as follows:—Complainants have employed the term "respondents" in place of the term "defendants," as used in the answer, and have in several instances used terms, and even sentences, not used in the answer but substantially equivalent to those so used.

Complainants omit the following allegation of the answer, to-wit: Defendants deny that the state of Iowa or the state of Illinois has any power to confer or did confer upon complainant any right or power to hold or control real property for church purposes or any purpose in the State of Missouri, and that such alleged corporation is authorized to take control of or exercise any authority or power over the property which it seeks to recover from defendant, and substitutes therefor the last thirteen lines, second paragraph of answer on page 12.

In second paragraph of page 13, commencing after the word "Ohio," in 15th line, the words "or for the Church of Jesus Christ "of Latter Day Saints at Kirtland, Ohio," are omitted.

From the 6th paragraph or allegation, on page 14, the following words are omitted, beginning after the word "alleged" in 6th line:—"And deny that either said Blakeslee or said Kelley or com-

"plainant ever held or does now hold any title, legal or equitable, "to said property to their own or to the use of any party whom-"soever," and the words "And leave the complainant to its proof" are interpolated.

From last paragrah on page 14, after the word "exclusive," in last line, the words "open," "hostile," "adverse," are omitted.

From second paragraph on page 15, in the 6th line the word "had" is omitted from before the word "no."

On page 16 in third paragraph, in 10th line, the figures "58" are substituted for "68" after the word "page"; and on same page, in fourth paragraph, in 9th line, "1868" is substituted for "1867."

In line 14 of second paragraph of page 17, the figures "1878" are substituted for the figures "1873."

In 2d line of paragraph two on page 18, the word "Joseph" is substituted for the word "Jacob."

On page 20, in first line of first paragraph, is omitted the words "Jesus Christ" after the word "church" and before the words "of Latter Day Saints"; also same words are omitted from same phraseology in 4th line of 5th paragraph on page 20.

In 6th paragraph, on page 20, at end of same, the following words are omitted, viz: "And that complainant did reorganize."

Following last paragraph aforesaid five consecutive paragraphs of the answer are wholly omitted from complainant's alleged copy, viz:

Deny—That one faction of the church which plaintiff assumes to represent retired therefrom led by Brigham Young, went from the State of Illinois to Council Bluffs, thence to Salt Lake City; and that said Brigham Young and his followers were a faction or seceding party from said church, and that another faction led by A. T. Strang, and another led by Gladden Bishop, and others led by other men located in different parts of the United States, and taught doctrines and beliefs not in harmony with the teachings, tenets and doctrines of the mother church. And deny that the church which plaintiff assumes to represent had any mother church, or any organization whatever prior to the time of the alleged secessions and divisions in 1846, and deny that it was composed, after said alleged secessions, and divisions, of those who held to the same doctrines and the same system of organization as did the "Church of Jesus Christ of Latter Day Saints" as originally constituted. Defendants allege that said Church of Jesus Christ of Latter Day Saints is identical with the church that was led by Brigham Young and by him located in Utah Territory, and practicing the same tenets and doctrines as were practiced by the same church at Nauvoo, Illinois, including the doctrines of tithing, baptism for the dead and polygamy.

Defendants further allege that after the great body of said Church of Jesus Christ of Latter Day Saints moved as aforesaid from Council Bluffs, Iowa, to Utah territory, a small number thereof remaining behind separated themselves from the church aforesaid, some following J. J. Strang, others W. B. Smith, others Sydney Rigdon and others other factional leaders, and that from dissenters from these the so-called Reorganized Church of Jesus

Christ of Latter Day Saints was constituted. That in one form or another it has propagated a combination of tenets and doctrines peculiar to its organization by and through a system unknown to the adherents of the Church of Jesus Christ of Latter Day Saints, from which it claims to have descended as from a mother and from Joseph Smith, Senior, as a father, who inculcated and practiced polygamy, a tenet which said Reorganized Church of Jesus Christ of Latter Day Saints at least publicly repudiates.

Defendants deny that Edward Partridge took the title of said land in trust for the Church of Jesus Christ of Latter Day Saints, or in trust at all, and deny that anyone since that time has held said property in trust for said church, or for any descendant or successor thereof.

Deny—That plaintiff ever exercised any ownership or control over said property, and deny that it has been recognized by the public authorities as church property and not taxable; but aver that defendant church, by its members and its trustees, has for more than twenty years, held the possession thereof openly, notoriously, actually and adversely to all the world, and paid the taxes thereon.

Next follows a paragraph not found anywhere in the answer, beginning near the end of page 20 and ending on the second line of page 21. With these exceptions the answer as published by complainants is substantially correct.

The replication is correctly copied in complainant's abstract.

TESTIMONY ON BEHALF OF RESPONDENTS.

They alleged that they are the owners in fee simple by title absolute of Lots 15, 16, 17, 18, 19, 20, 21, 22, and the whole thereof, and are entitled to the immediate possession thereof, as well as the rents, profits and the free enjoyment of said possession and ownership without let or hindrance by complainant or any other person. Answer, page 12, Amended Bill.

PROOF BY BILL OF COMPLAINT.

A. That by successive links the chain of title led from the United States Government to one Edward Partridge, December the 19th, 1832, who, at that date, became the owner by *free simple*
B. *title*. That Edward Partridge "soon after," March 25, 1839, dying, his widow, Lydia Partridge, and his three children, Eliza M., Emily D., and Caroline E. Partridge, did, May 5, 1848, execute and deliver a pretended quit-claim deed, and that only of said premises to one James Pool, purporting to convey said premises in controversy to him, the said Pool; that August 3d, 1848, the said James Pool, by pretended deed of conveyance, conveyed the same to one John Maxwell; that September 22, 1848, the sheriff of Jackson County, Missouri, on executions in certain judgments against him, the said James Pool, did sell said real estate to said John Maxwell: that the said Maxwell

dying, his heirs did afterward, March 23, 1867, by what purported to be a deed, deed said premises to one Joseph C. Irvin, and afterward said Irvin did by a pretend conveyance purport to convey the said premises to one William Eaton; that afterward the said Eaton *conveyed the same* to one Granville Hedrick, for the use and in trust for the Church of Christ of Latter Day Saints; that afterward the said Granville Hedrick dying, in an *ex parte* proceeding, the Circuit Court of Jackson County, Missouri, did, in September, 1890, appoint defendant, Richard Hill, trustee to execute the trust imposed upon him, the said Hedrick.

By Deeds. From Jones H. Flournoy and wife to Edward Partridge, Exhibit 20, on page 234 of complainant's abstract as offered in evidence by complainant.

On page 699 of testimony, counsel for complainant said: "I will agree that this entry may be made of record. 'It is agreed that all original deeds offered in evidence by either party may be offered and introduced without the necessity of proving formally the original signature of the grantors named in the deed.' "

By Mr. Southern—"And that the signature of such grantors is admitted."

By Mr. Kelley—"I don't think that that would necessarily follow, Colonel."

By Mr. Southern—"Then you wont admit the signatures. If I prove the signature it is all right, and if it is admitted it is all right, too."

By Mr. Kelley—"Well, I think if you want us to admit as much as that we had better strike the whole thing out."

By Mr. Southern—"Put it this way—that the signature of the original grantor is admitted to all original deeds unless specifically objected to."

By Mr. Kelley—"Yes, sir, that is all right; that will do. Either party has the right to object to the signature of either party—of any one."

By Mr. Southern—"That is satisfactory."

By Mr. Southern—"Defendants offer in evidence a certified copy of a deed from Jones Flournoy to Edward Partridge, which I wish to be marked exhibit "A S," and it is admitted that the original is not within the possession of, control or reach of the defendants."

Abstract of Deeds Offered as above by Defendants.

Warranty Deed dated December 19, 1831; filed May 24, 1832; consideration $130 00
Book B, Page 31.

JONES H. FLOURNOY AND WIFE, CLARA, TO EDWARD PARTRIDGE.

Give, grant, bargain, sell and confirm unto the said party of the second part the following described land in Jackson county, Missouri, to-wit:

Part of the southeast quarter of section three (3), township forty-nine (49) range, thirty-two (32), commencing on the south line of said quarter-section forty poles from the southeast corner of said quarter-section at the corner of a certain piece of land sold by said Flournoy and wife to one Lewis Jones, and from thence west one hundred and twenty— to the southwest corner of said quarter-section north sixteen

poles and ten links; north forty degrees east ten poles; north twenty-one degrees east fourteen poles; north fifteen degrees east twenty poles; north forty-two degrees east thirty-four poles; north fifty-five degrees east thirty poles; north sixty-four degrees east forty poles; north seventy degrees east seventeen poles and fifteen links to the corner of a certain tract of land sold by said Flournoy and wife to one G. M. Hensley, and thence due south one hundred and twenty-two poles and seventeen links to the place of beginning, containing 63.43 acres, to have and to ho'd the same to grantee, his heirs and assigns forever. Grantors covenant to warrant and defend the same against all claims

In witness whereof we have hereunto set our hands and affixed our seals.

JONES H. FLOURNOY. [Seal.]
CLARA FLOURNOY. [Seal.]

STATE OF MISSOURI, } ss.
COUNTY OF JACKSON, }

Be it remembered that on this 19th day of December, 1831, before the undersigned deputy for Samuel C Owens, Clerk of the Circuit court of the aforesaid county, personally came Jones H. Flournoy and Clara Flournoy, both personally known to the undersigned to be the persons whose names are subscribed to the foregoing instrument of writing, as having executed the same and acknowledged the said instrument of writing to be their act and deed for the uses and purposes therein mentioned, she, the said Clara Flournoy, being by me first made acquainted with the contents thereof, and examined separate and apart from her husband, whether she executed said deed and relinquishes her dower in the lands and tenements in said deed mentioned, freely, voluntarily and without compulsion or undue influence of her said husband, acknowledged and declared that she executed said deed and relinquishes her dower in the lands and tenements in said deed mentioned freely, voluntarily and without compulsion or undue influence of her said husband.

Taken and certified to under my hand and the private seal of Samuel C. Owens, clerk of our said court, there being no seal of office, the day and year above written.

RUSSELL HICKS, "Dep" for
SAMUEL C. OWENS, "C. C. J. C."

Defendant now offers in evidence a certified copy of a deed from Lydia Partridge and Elizabeth Partridge, etc., heirs of Edward Partridge, to James Pool, which is marked exhibit "B S," purporting to convey the same land as was conveyed in the deed last offered in evidence, and it is admitted by the plaintiff that the original is not within the possession or control, or within the reach of the defendants, or any of them.

By Mr. Traber—"Now, then, that is objected to by the plaintiff because it is not acknowledged according to law; and on the further ground because it is incompetent and immaterial, and because the grantors had no interest in the land described in the deed at the time of its execution." Plaintiff's Abstract, page 416.

Deed dated May 5, 1848; filed June 16, 1848; recorded June 16, 1848, Book N, page 203. Consideration $300.00.

LYDIA PARTRIDGE, widow of EDWARD PARTRIDGE, EMILY J. PARTRIDGE and CAROLINE E PARTRIDGE, heirs of EDWARD PARTRIDGE, deceased,
TO
JAMES POOL.

Give, grant, bargain, sell, confirm and quit claim unto the said party of the second part the following described land in Jackson county, Missouri, to-wit:

Part of the southeast quarter of section three (3), township forty-nine (49), range thirty-two (32), commencing on the south line of said quarter-section forty poles from the southeast corner of said quarter-section, at the corner of a certain piece of land sold by said Flournoy and wife to one Lewis Jones, and from thence running west one hundred and twenty poles to the southwest corner of said quarter-section, thence north sixteen poles and ten links, thence north forty degrees east ten poles;

north twenty-one degrees east fourteen poles; north fifteen degrees east twenty poles; north forty-two degrees east thirty-four poles; north fifty-five degrees east thirty-four poles; north sixty-four degrees east forty poles; north seventy degrees east seventeen poles and fifteen links to a corner of a certain tract sold by said Flournoy and wife to one G. M. Hensley, thence south one hundred and twenty-two poles and seventeen links to beginning—63.43 acres, to have and to hold the same to grantee, his heirs and assigns forever.

In witness whereof we have hereunto set our hands and affixed our seals.

LYDIA PARTRIDGE. [Seal.]
ELIZA M. PARTRIDGE. [Seal.]
EMILY D. PARTRIDGE. [Seal.]
CAROLINE E. PARTRIDGE. [Seal.]

STATE OF MISSOURI, } ss.
COUNTY OF ATCHISON, }

Be it remembered that on this 5th day of May, 1848, before me, A. A. Bradford, Clerk of the Circuit Court within and for the County of Atchison, aforesaid, personally came Lydia Partridge, Eliza M. Partridge, Emily D. Partridge and Caroline E. Partridge, who are personally known to me to be the same persons whose names are subscribed to the foregoing instrument of writing as parties thereto, and acknowledged the same to be their voluntary act and deed for the purposes therein mentioned.

In testimony whereof, I have hereunto set my hand and affixed my private seal (there being no seal of court provided), at office the day and year last aforesaid.

A. A. BRADFORD, Clerk.

By Mr. Southern—"Defendant now offers in evidence an original deed from James Poole to John Maxwell, marked exhibit "D S," with certificate as to acknowledgment and endorsement of date of record, and it is admitted that the signature thereto is the signature of James Poole, the grantor."

By Mr. Traber—"The same objection is made to this deed as was made to the last deed offered in evidence, except as to the acknowledgment." Plaintiff's Abstract, page 416.

Warranty Deed dated August 3d, 1848; filed August 3d, 1848; recorded August 3d, 1848; Book N, page 273; consideration $600.00.

JAMES POOL
TO
JOHN MAXWELL.

Give, grant, bargain, sell alien, convey and confirm unto the said party of the second part the following described land in Jackson county, Missouri, to-wit:

Part of the southeast quarter of section three (3), township forty-nine (49), range thirty-two (32), commencing on the south line of said quarter-section at the corner of a certain piece of land sold by one Flournoy and wife to one Lewis Jones, thence west one hundred and twenty poles, to the southwest corner of said quarter-section, thence north sixteen poles and ten links, north forty degrees east ten poles, north twenty-one degrees east fourteen poles, north fifteen degrees east twenty poles, north forty-two degrees east thirty-four poles, north fifty-five degrees east thirty-four poles, north sixty-four degrees east forty poles, north seventy degrees east seventeen poles and fifteen links to the corner of a certain tract of land sold by said Flournoy and wife to one G. M. Hensley, thence south one hundred and twenty-two poles and seventeen links to beginning, containg 63.43 acres, to have and to hold the same to grantee, his heirs and assigns forever. Grantors covenant to warrant and defend the same against all claims.

In testimony whereof the said James Pool has hereunto set his hand and seal.

JAMES POOL. [Seal.]

STATE OF MISSOURI, } ss.
COUNTY OF JACKSON, }

Be it remembered that James Pool, who is personally known to the undersigned clerk of the Circuit court within and for the county aforesaid, to be the person whose name is subscribed to the foregoing deed as a party thereto, this day appeared before me and acknowledged that he executed and delivered the same as his voluntary act and deed for the uses and purposes therein mentioned.

In testimony whereof, I have hereunto set my hand and affixed the seal of said court at office in Independence, this 3d day of August, A. D. 1848.

SAMUEL D. LUCAS, Clerk.

H. G. Henley, of lawful age, being produced, sworn and examined on the part of the defendants, testified as follows. Testimony, page 699.

DIRECT EXAMINATION BY MR. SOUTHERN.

Q. State your name to the reporter. A. H. G. Henley.

Q. Mr. Henley, look at the paper which I now hand you and state to the Notary what it is. A. Yes, sir.

Q. Well, what is it? A. This is the transcript.

Q. Wait a moment, Mr. Henley. You, or rather I am just a little too fast. I want to prove a thing or two before I get to that. Mr. Henley, what office do you hold, if any, in Jackson county, Missouri? A. I am deputy circuit clerk of Jackson county, Missouri.

Q. You are the deputy here at Independence, are you not? A. Yes, sir. I am the deputy in charge of the office here at Independence.

Q. And as such are you in charge of any of the records of the clerk's office? A. Yes, sir, I have charge of the office at Independence. I have charge of this office here.

Q. You have charge of the office here at Independence? A. Yes, sir.

Q. How long have you been in charge of the office here at Independence, Mr. Henley? A. I have been in charge of the office here at Independence since 1887.

Q. Well, now look at the paper which I hand you and, if you can do so, you may state to the reporter what it is? A. It is the transcript of the proceedings of the case of Samuel H. Woodson, plaintiff, against Robert G. Smart, administrator of the estate of John Maxwell, deceased, and others.

Q. Does it state the others? A. Yes, sir.

Q. Well, read the names of all the parties. A. John Maxwell, deceased, Robert G. Smart as administrator of the estate of John Maxwell, deceased, Matilda Maxwell, William A. Maxwell, Theodore H. Maxwell, Ambrose A. Maxwell, Ann Mary Maxwell, John A. Maxwell and Robert G. Maxwell.

Q. That is the transcript of that case, is it? A. Yes, sir.

Q. With what addition, if any? A. Well, with the certificate of the clerk—the certificate of the clerk, "H. H. Noland," is attached, and the certificate of the judge, J. H. Slover, as to his signature.

Q. I now offer that transcript in evidence, and ask that it be marked "Exhibit E. S."

Counsel for the plaintiff objects to the transcript offered in evidence for the reason that it is incompetent, irrelevant and immaterial; and on the further ground the transcript is objected to on the ground that the court authorizing the proceedings of which the paper offered in evidence purports to be a transcript, had no jurisdiction of the subject matter of the action or of the parties, and the paper speaks for itself as to what it is.

By Mr. Southern: Q. Now, Mr. Henley, I hand you another

paper and ask you to state to the reporter what it is, if you know what it is?

Counsel for the plaintiff objects to the question asked the witness on the ground that the paper offered the witness is the best evidence and speaks for itself as to what it is.

A. Now this is the transcript of the proceedings in the case of James Wood, James E. Yeatman, Samuel Stacker and John Bell, plaintiffs, against James Pool.

Q. With the appended certificates? A. Yes, sir. With the certificates of Noland as clerk and J. H. Slover as judge.

Q. These are both transcripts of the records in your office? A. Yes, sir.

Q. In the office of the clerk of the Circuit court? A. Yes, sir.

Counsel for the plaintiff objects to the two last questions asked the witness on the ground that they are leading and immaterial.

Q. I now offer this last transcript in evidence, and ask that it be marked "Exhibit E. S."

Counsel for the plaintiff objects on the ground stated in the objection to "Exhibit E. S."

IN THE CIRCUIT COURT OF JACKSON COUNTY, MO.

WOODS, YEATMAN, et al.,
vs.
JAMES POOL.
File No. 1385.

To the Honorable the Jackson Circuit court: James Woods, James E. Yeatman, Samuel Stacker and John Bell, merchants, trading and doing business under the name and style of Woods, Yeatman and company, plaintiffs, states that they are the legal owners of a note against defendant, James Pool, to the following effect:

$393.11. INDEPENDENCE, August 21st, 1845.

One day after date I promise to pay to the order of Woods, Yeatman & Co., (merchants and partners in trade: firm composed of James Wood, James E. Yeatman, Samuel Stacker and John Bell), Three Hundred and Ninety-three Dollars and Eleven Cents, with interest at the rate of ten per cent, per annum from date until paid, for value received, negotiable and payable without defalcation or discount.

JAMES POOL.

Yet the debt remains unpaid. Therefore they demand judgment for their debt and damages for the detention thereof, together with costs.

WOODSON & SMITH, Atty's for Plaintiffs.

Summons issued in due form under hand of clerk and seal of court.

RETURN.

I certify that I executed the within summons by reading the within petition and summons to the within named James Pool on the first day of September, A. D. 1846, in Jackson county.

B. F. THOMSON, Sheriff.

JAMES WOOD, JAMES E. YEATMAN, SAM'L STACKER and JOHN BELL,
vs.
JAMES POOL.
Record F, page 65, Sept Term, 1846.

Now at this day comes the parties aforesaid by their attorneys and said defendant files nil debit.

Record F, page 73. SAME CAUSE. September Term, 1846.

Now at this day comes the parties aforesaid by their attorneys and said defendant files motion and affidavit for a continuance of this cause.

Record F, page 76. SAME CAUSE. September Term, 1846.

Now at this day comes the parties aforesaid by their attorneys and said defendant by leave of court withdraws his plea nil debit and affidavit for continuance, and says that he will not further deny the action of the plaintiffs aforesaid as they have above complained, therefore said plaintiffs ought to recover against the said defend-

ant their debts and damages on occasion of the premises, and it manifestly appearing to the court that the debt in plaintiffs' petition mentioned is liquidated and reduced to writing, the court doth find that said defendant is indebted to said plaintiffs in the sum of $393.11, the debt in said petition mentioned, and the sum of $42.58 damages for the detention of the debt aforesaid. Therefore, it is considered by the court here that plaintiffs recover against the said defendant the debt aforesaid, and also the damages aforesaid, in manner aforesaid, by the court so found and assessed, together with the costs and charges in his behalf laid out and expended; and that they have thereof execution.

EXECUTION—1187.

THE STATE OF MISSOURI—

To the Sheriff of Jackson county, GREETING:

WHEREAS, James Wood, James Yeatman, Samuel Stacker and John Bell, on the 25th day of September, 1846, of the Jackson Circuit court hath recovered against James Pool for debt $393.11, and for damages the sum of $42.58, which to the said James Wood, James Yeatman, Samuel Stacker and John Bell were adjudged for their debt and damages aforesaid, and also for their costs.

These command you, as you have often been heretofore commanded, and of the goods and chattels and real estate of the said James Pool, you cause to be made the debt and damages aforesaid, together with the costs. and that you have the same before the judge of our said court on the first day of the next September Term thereof, to satisfy the debt, damages and costs aforesaid, and that you certify how you executed this writ.

Witness, Samuel D. Lucas, clerk of our said court, with the seal thereof [L. S.] hereto affixed, at office in Independence, this 6th day of July, A. D. 1848.

SAMUEL D. LUCAS, Clerk.

RETURN.

I certify that I executed the within execution by levying the same on the following land as property of the within named James Pool, in Jackson county, on the 6th day of July, A. D. 1848, to wit:

A part of the southeast quarter of section three (3), township forty-nine (49), range thirty-two (32), commencing on the south line of said quarter-section at the corner of a certain piece of land sold by one Flournoy and wife to one Lewis Jones, and from thence running west one hundred and twenty poles to the southwest corner of said quarter section, thence north sixteen poles and ten links, thence north forty degrees east ten poles, north twenty-one degrees east fourteen poles, north fifteen degrees east twenty poles, north forty-two degrees east thirty-four poles, north fifty-five degrees east thirty-four poles, north sixty four degrees east forty poles, north seventy degrees east seventeen poles and fifteen links to the corner of a certain tract of land sold by the said Flournoy and wife to one G. M. Hensley, and from thence due south one hundred and seventy-two poles and seventeen links to beginning, containing 63 acres and 43 poles.

July 6th, A D. 1848. B. F. THOMSON, Sheriff.

I further certify that I sold James Pool's interest in the above described land at sheriff's sale on the 22d day of September, A. D. 1848, at the court house door in the town of Independence, Jackson county, and during the session of the circuit court, after giving notice agreeable to law, and John Maxwell being the highest and best bidder, became the purchaser at $1,315, out of the proceeds of which sale this execution is satisfied in full.

This 23d day of Sept., A. D. 1848. B. F. THOMSON, Late Sheriff.

STATE OF MISSOURI, }
COUNTY OF JACKSON. } In the Circuit court, March Term, 1849.

Be it remembered that on this 24th day of March, 1849, Benjamin F. Thomson, late Sheriff of Jackson county, appeared in open court, who is personally known to the court to be the person whose name is subscribed to a deed produced in court conveying to John Maxwell the following real estate, to-wit: (here follows description as in body of deed), which was sold under six executions issued by the clerk of the Jackson Circuit court, two in favor of Goldstein & Bro., and one in favor of Woods, Yatman & Co., one in favor of J. C. Reynolds, one in favor of Thomas J. Payne and one in favor of George T. Vernon, and all against James Pool, and said late sheriff acknowledged the said deed to be his act and deed for the uses and purposes therein contained, which is ordered to be certified and endorsed on said deed. I, Samuel D. Lucas, clerk of said sourt, do certify that the foregoing is truly copied from the record in my office.

In testimony whereof, I have hereunto set my hand and affixed the seal of said court at office in Independence, this 24th day of March, A. D 1849.

SAMUEL D. LUCAS, Clerk.

By Mr. Southern—"Defendant now offers in evidence a deed made by James Poole by Benjamin F. Thompson, Sheriff Jackson county, Missouri, to John Maxwell, marked "Exhibit D S A," with the accompanying acknowledgments and certificates, and its execution by said sheriff is admitted; and it is further admitted that the original is not in the possession or control or within the reach of the defendants or any of them."

Sheriff's Deed, dated March 24, 1849; filed April 18, 1849; recorded April 18, 1849; Book O, page 99; consideration $1,315.

JAMES POOL, by Sheriff,
TO
JOHN MAXWELL.

Deed, after setting forth the other executions and the foregoing (No. 1187), recites: By virtue of said executions said sheriff did proceed to levy upon and sell all the right, title and interest, claim, estate and property of the said James Pool, of, in and to the following described real estate, to-wit:

Part of the southeast quarter of section three (3), township forty-nine (49), range thirty-two (32), commencing on the south line of said quarter section at the corner of a certain piece of land sold by one Flournoy and wife to one Lewis Jones, and from thence running west one hundred and twenty poles, to the southwest corner of said quarter section, thence north sixteen poles, and ten links, thence north forty degrees east ten poles, thence north twenty-one degrees east fourteen poles, thence north fifteen degrees east twenty poles, thence north forty-two degrees east thirty-four poles, thence north fifty-five degrees east thirty-four poles, thence north sixty-four degrees east forty poles, thence north seventy degrees east seventeen poles and fifteen links to the corner of a certain tract of land sold by said Flournoy and wife to one G. M. Hensley, thence south one hundred and seventy-two poles and seventeen links to beginning, to satisfy said executions, which said tract of land containing 63.43 acres, and lies in Jackson county, and having previously to the day of sale hereinafter mentioned, given at least twenty days notice of the time and place of sale, and of the real estate to be sold and where situated, as the law directs, by advertisement in the "Western Expositor," a newspaper printed in said county of Jackson, and which said advertisement is in the words and figures as follows: (here follows advertisement citing authority to sell, giving day of sale and description of property to be sold by B F. Thompson, late sheriff), by virtue of which said execution, and the several levies made thereon, and in pursuant and agreeably to said advertisement and notice of said sale, I did on the said 22d day of September, 1848, between the hours of nine of the clock in the forenoon and five of the clock in the afternoon of said day, offer and expose the said real estate for sale publicly by auction, for ready money, at the court house door in the town of Independence, and while the circuit court was in session, all the right, title, interest, estate and property of the said James Pool, of, in and to the above described real estate, together with all privileges thereunto belonging, and John Maxwell being the highest and best bidder therefor, became the purchaser thereof at and for the price and sum of $1,315.00.

Now know ye, that in consideration of the premises and of the said sum of $1,315 00, to me in hand paid by the said John Maxwell, the receipt whereof is hereby acknowledged, and by virtue of authority in me vested by law, I, Benjamin F. Thompson, sheriff as aforesaid, do hereby assign, transfer, convey and confirm to the said John Maxwell all the right, title, interest, claim, estate and property of the said James Pool, of, in and to the above described real estate, that I might or could sell and convey as such sheriff as aforesaid, by virtue of which said execution and advertisement as aforesaid, to have and to hold the same to grantee, his heirs and assigns forever.

In testimony whereof, I, Benjamin F. Thompson, as such sheriff, have hereunto set my hand and seal.

BENJAMIN F. THOMSON, [Seal]
Sheriff of Jackson county, Mo.

STATE OF MISSOURI,
COUNTY OF JACKSON.

In the Circuit court, March Term, 1849. Be it remembered that on this 24th

day of March, 1849, Benjamin F. Thomson, late sheriff of Jackson County, appeared in open court, who is personally known to the court to be the person whose name is subscribed to a deed produced in court conveying to John Maxwell the following real estate, to-wit (here follows description as in body of deed), which was sold under six executions issued by the clerk of the Jackson Circuit Court, two in favor of Goldstein & Bro., and one in favor of Woods, Yatman & Co., one in favor of J. C. Reynolds, one in favor of Thomas J. Payne and one in favor of George T. Vernon, and all against James Pool, and said late sheriff acknowledged the said deed to be his act and deed for the uses and purposes therein contained, which is ordered to be certified and endorsed on said deed. I, Samuel D. Lucas, clerk of said court, do certify that the foregoing is truly copied from the record in my office.

In testimony whereof, I have hereunto set my hand and affixed the seal of said court, at office in Independence, this 24th day of March, A. D. 1849

SAMUEL D. LUCAS, Clerk.

The foregoing deed and acknowledgement from Benjamin F. Thomson, late sheriff, was deposited and duly recorded in my office on the 18th day of April, A. D. 1849.

SAMUEL D. LUCAS, Clerk,
B. WILLIAM LUCAS, D. C.

STATE OF MISSOURI, } ss.
COUNTY OF JACKSON. }

I, H. H. Noland, clerk of the Circuit court within and for the county and state aforesaid, do hereby certify that the above and foregoing is a full, true and complete transcript of all proceedings had and made of record in the case wherein James Woods and others are plaintiffs and James Pool is defendant.—No. 1385, as the same remains of record in my office.

In testimony whereof, I have hereto set my hand and affixed the seal of [seal] said circuit court. Done at office in the city of Independence, this 25th day of June, 1892.

H. H. NOLAND, Clerk.

STATE OF MISSOURI, } ss.
COUNTY OF JACKSON. }

I, J. H. Slover, one of the judges of the circuit court within and for the county and state aforesaid, the same being the 24th judicial circuit of the state of Missouri, (there being no presiding judge,) do hereby certify that H. H. Noland is the duly elected, qualified and acting clerk of said court, and that his signature attached to the foregoing instrument is genuine and entitled to credit.

Witness my hand this 27th day of June, A. D. 1892.

J. H. SLOVER, Judge.

Defendants here offered in evidence deed of Lemuel J. Edwards to Samuel H. Woodson, and it was admitted that the original is not within the control or custody of defendants. Marked "Exhibit A S A." Objected to plaintiffs same as last deed; also because of uncertainty of description and insufficiency of acknowledgment.

Quit-Claim Deed, dated August 10, 1842; filed March 1, 1847; recorded March 1, 1847, Book L, page 583; consideration $100 00.

LEMUEL J. EDWARDS }
TO
SAMUEL H. WOODSON. }

Grant, bargain, sell, convey and quit-claim unto the said party of the second part the following described land in Jackson county, Missouri, to-wit:

Part of the southeast quarter of section three (3), township forty-nine (49), range thirty-two (32), commencing on the south line of said quarter-section forty poles from the southeast corner of said quarter section, at the corner of a certain piece of land sold by said Flournoy and wife to one Lewis Jones, and from thence west one hundred and twenty —— to the southwest corner of said quarter-section, thence north sixteen poles and ten links, thence north forty degrees east ten poles, thence north twenty-one degrees east fourteen poles, thence north fifteen degrees east twenty poles, thence north forty-two degrees east thirty-four poles, thence north fifty-five degrees east thirty-four poles, thence north sixty-four degrees east forty poles; thence north seventy degrees east seventeen poles and fifteen links to the corner of a certain tract of land sold by said Flournoy and wife to one G. M. Hensley, and thence due south one hundred and twenty-two poles and seventeen links to the place of beginning, containing 63.43 acres, to have and to hold the same to grantee, his heirs and assigns forever.

In witness whereof, the said party of the first part hereunto sets his hand and seal. LEMUEL J. EDWARDS. [Seal.]

STATE OF MISSOURI, } ss.
COUNTY OF JACKSON, }

Be it remembered that on this 1st day of March, 1847, before the undersigned clerk of the Circuit court within and for the county aforesaid, came Lemuel J. Edwards, who is personally known to me to be the person whose name is subscribed to the foregoing instrument of writing as a party thereto, and acknowledged the same to be his act and deed for the purposes therein mentioned.

In testimony whereof, I have hereunto set my hand and affix the seal of said court at office in Independence, this 1st day of March, A. D. 1847.

SAMUEL D. LUCAS, Clerk.

Certified as the other deeds.

PLAT OF WOODSON & MAXWELL'S ADDITION TO INDEPENDENCE, MO.

PAGE 707 OF TESTIMONY.

By Mr. Southern—I offer now a copy of the original plat of Woodson & Maxwell's Addition to the town of Independence, with accompanying certificates of dedication and acknowledgment, and of verification and it is admitted that the original plat is in the possession and under the control of the recorder of deeds of Jackson county, Missouri, and that his office is the only and proper place for its deposit, and that he is the only and proper custodian of it, and that the plat was signed and executed as it purports to have been, and ask that it be marked V. S.

See copy of plat marked ——— filed by P. H. Grinter.

Plat Book 1, page 7. Dated March 31, 1851; filed for record March 31, 1851.

STATE OF MISSOURI, }
COUNTY OF JACKSON, }

Be it remembered, that Samuel H. Woodson and John Maxwell, (proprietors of the within addition to the town of Independence), who are personally known to the undersigned, Clerk of the Circuit court, within and for the county aforesaid, to be the persons whose names are subscribed to the within and foregoing Plat, as proprietors thereof, this day appeared before me and acknowledged that they executed the same for the use and purposes of such Addition as therein separated; and that they hereby grant and convey for public use the streets and alleys, squares and public grounds set apart therein as shown by said plat, without any reserve over these parts whatsoever.

In testimony whereof, I hereby set my hand and affix the seal of said court at office in Independence, this 31st day of March, A. D. 1851.

[Seal.] (Signed.) SAMUEL D. LUCAS, Clerk.

COPY OF RECORDS OF CIRCUIT COURT IDENTIFIED BY H. G. HENLEY, CLERK.

S. H. Woodson,
vs.
R. G Smart, Adm'r and heirs of John Maxwell.

Papers missing.

Receipt for papers on file, signed, SCHUELER and T. By B

Record L., Page 410. SAME CAUSE. September Term, 1858.

In substance—R. G. Smart appointed guardian ad litem for Emmett C., Thomas F., William A., Theodore W., Ambrose A., Ann Mary and Rob't C. Maxwell, infant defendants herein, and thereupon the said guardian ad litem, files answer for said infant defendants, and defendant, Matilda Maxwell, failing to appear said petition is taken as confessed against her.

Record L., page 658, SAME CAUSE. March Term, 1859.

Defendant, Robert G. Smart and Matilda Maxwell, files answer to said petition.

Record N, page 9. March Term, 1859.—7187.

Samuel H. Woodson,
vs.
Rob't G. Smart, Adm'r of the estate of John Maxwell, dec'd Matilda Maxwell, Emmet Maxwell, Thos. F. Maxwell, Wm. A. Maxwell, Theodore H. Maxwell, Ambrose A. Maxwell, Ann Mary Maxwell, John A. Maxwell, and Robert C. Maxwell.

Now at this day comes the plaintiff aforesaid, by his attorney, and the said Matilda Maxwell, by her attorney, as well as the other defendants, heirs of the said John Maxwell, by their guardian ad litem, and by the consent of the parties herein this cause is taken up for hearing, and submitted to the court upon the petition, answers, exhibits and proofs; whereupon the court doth find that on the 25th day of February, A. D. 1851, that a written agreement was entered into between plaintiff and John Maxwell (since deceased), wherein it was agreed and stipulated as follows, among other things, to wit: That in consideration of the plaintiff executing to said Maxwell his promissory note, to be due in six months from the date of said agreement, that said Maxwell would at once, or in a reasonable time, execute to plaintiff a quit-claim deed, his wife joining therein, to a portion of the following described tract or parcel of land lying in the county of Jackson and state of Missouri, to wit:

A part of the southeast quarter of section three (3), township forty-nine (49), range thirty-two (32), commencing at the south line of said quarter-section forty poles from the southeast corner of said quarter-section, at the corner of a certain piece of land sold by Jones H. Flournoy and wife to Lewis Jones, and from thence running west one hundred and twenty poles to the southwest corner of said quarter-section, thence north sixteen poles and ten links, thence north forty degrees east ten poles; thence north twenty-one degrees east fourteen poles; thence north fifteen degrees east twenty poles; thence north forty-two degrees east thirty-four poles; thence north fifty-five degrees east twenty poles; thence north sixty-four degrees east forty poles; thence north seventy degrees west seventeen poles and fifteen links to the corner of a certain piece of land sold by said Flournoy and wife to one G. M. Hensley, and from thence due south one hundred and seventy-two poles and seventeen links to beginning, and the part of said tract that said Maxwell so agreed to convey to said plaintiff being all that portion thereof lying south of Walnut street of the city of Independence extended west through said land to the Westport road; and the court doth further find that the plaintiff did execute and deliver his notice to said Maxwell due in six months from the date of said agreement, as the consid-

eration for a portion of said real estate so agreed to be conveyed as aforesaid by said Maxwell and wife; and the court doth further find that said Maxwell departed this life without ever having made and executed a deed to plaintiff for some portion of said land as aforesaid, and the court doth further find that the allegations in said petition are true; it is therefore considered, adjudged and decreed by the court here that title to said portion of said land as aforesaid so agreed to be conveyed as aforesaid by said Maxwell and wife, to-wit: All that portion of the tract or parcel of land first described herein lying south of Walnut street, of the city of Independence, extended west through said land to the Westport road, pass to and vest in plaintiff as fully and as amply as though the same had been deeded by said John Maxwell and wife, as against the heirs of said John Maxwell, deceased, and against all other persons claiming by or under them; and it is further decreed that a copy of this decree be recorded in the Recorder's office of Jackson county, to operate as a deed to said plaintiff for said portion of land so purchased of said Maxwell as aforesaid.

And it appearing to the satisfaction of the court here that the said plaintiff, Samuel H. Woodson, and the said heirs of the said John Maxwell, deceased, are the joint owners as tenants in common of the following real estate to wit: Lots 1, 2, 3, 4, 5, 6, 7, 8, 9, 10, 11, 12, 13, 14, 15, 16, 17, 18, 19, 20, 21, 22, 23, 24, 25, in Woodson & Maxwell's Addition to the city of Independence, Jackson county, Missouri, and are entitled thereto as follows, to-wit: The said Samuel H. Woodson to the equal undivided one-half of said lots absolutely, quantity and quality relativley considered, (subject to the further order of this court) in relation to money due said decedent from sale of said lots, and Matilda Maxwell, as widow and relict of said decedent, to the one third part of the undivided one-half of said lots during her natural life as her dower-right therein, quantity and quality relatively considered as to value, and Emmett C., Thomas F., William A., Theodore H., Ambrose A., Ann Mary, John A. and Robert C. Maxwell, each to the equal undivided one eight part of the undivided half of said lots, absolutely, quantity and quality relatively considered, subject to the dower-right of the widow therein as aforesaid, and all subject to the further orders of the court herein: It is therefore considered and adjuged by the court here that partition and division of the premises aforesaid be made between the parties aforesaid, according to the rights and interests aforesaid, by the court so found and declared as aforesaid; and it appearing to the satisfaction of the court that the said lots or real estate is not susceptible of division, and that partition thereof cannot be made without great prejudice to the owners thereof, it is therefore ordered by the court that the sheriff of Jackson county proceed and sell the said lots or real estate as aforesaid on a credit of one-half purchase money payable in nine months, and the other payable in twenty-one months, and that he take bond with good and sufficient security therefor, drawing the hightest rate of legal interest after due until paid, and that he conduct said sale as required by law in selling real estate under writs of fieri facias, and that he reports his proceedings in the premises, and all further orders in relation to the proceeds of said sale and the disposition thereof are reserved until the next term, and this cause is continued.

Be it remembered that on the 10th day of the regular September Term, A. D. 1867, of the circuit court, within and for the county and state aforesaid, at Independence, the same being the 20th day of said month, the following among other proceedings were had and made of record, to-wit:

Record P, page 525.

Be it remembered that John G. Hayden, who is personally known to the court to be the late sheriff of Jackson county, and the same person whose name is subscribed to seven certain deeds produced in court, described as follows, to-wit:

One conveying to Samuel H. Woodson lots numbered 1, 4, 5, 6, 8, and 15, in Woodson and Maxwell's Addition to the city of Independence, which were sold in the partition suit of Samuel H. Woodson against Robert G. Smart, adm'r of the estate of John Maxwell, deceased, and others.

One conveying to John H. Taylor the southwest quarter of the northeast quarter of section 2, township 49, range 32, which was sold in the partition suit of Richard O. Kelly et al., against Judson E Bowers.

One conveying to Richard O. Kelly the north half of the northwest quarter of the southwest quarter of section 2, township 48, range 32, which was sold in the cause last above mentioned.

One conveying to Alexander Harris the southwest quarter of the northeast quarter of section 34, township 49, range 32, which was sold in the cause last above mentioned.

One conveying to John Montgomery lots 9 and 20 in Woodson & Maxwell's

Addition to Independence, which were sold in the cause first above mentioned.

One conveying to the heirs of John Kelly, deceased, lot 16 in Woodson & Maxwell's Addition aforesaid, which was sold in the cause first above mentioned.

And the other conveying to Elijah G. Chiles the west half of the northeast quarter of section 12, township 50, range 30; the southeast fractional part of the southeast quarter of section 1, in the same township and range, and 65 acres off the north end of the east half of the northeast quarter of section 12 in the same township and range, containing in all 177 acres, which was sold in partition between Cynthia Hudspeth et al. against Robert Hambright et al., this day said sheriff personally appeared in open court and acknowledged said several deeds, each to be his voluntary act and deed, for the purposes therein mentioned, which is ordered to be certified.

STATE OF MISSOURI, } ss.
COUNTY OF JACKSON, }

I, H. H. Noland, clerk of the circuit court within and for the county and state aforesaid, do hereby certify that the above and foregoing is a full, true and complete transcript of all proceedings had and made of record in the case wherein Samuel H. Woodson is plaintiff and Robert G. Smart and others defendants—No. 7187, as the same remains of record and on file in my office.

In testimony whereof, I have hereunto set my hand and affixed the seal [Seal.] of said circuit court. Done at office in the city of Independence, this 25th day of June, 1892. H. H. NOLAND, Clerk.

STATE OF MISSOURI, } ss
COUNTY OF JACKSON, }

I, J. H Slover, one of the judges of the circuit court within and for the county and state aforesaid, the same being the 24th judicial circuit of the state of Missouri, (there being no presiding judge) do hereby certify that H. H. Noland is the duly elected, qualified and acting clerk of said court, and that his signature attached to the foregoing instrument is genuine and entitled to credit.

Witness my hand this 27th day of June, A. D. 1892.

J. H. SLOVER, Judge.

DEEDS OFFERED.

Testimony, pages 704, 705 and 706.

Defendant now offers in evidence a deed of Robert G. Smart, administrator of the estate of John Maxwell, deceased, Matilda Maxwell, Emmett C. Maxwell, Thomas F. Maxwell, William A. Maxwell, Theodore H. Maxwell, Ambrose A. Maxwell, Ann Mary Maxwell and Robert C. Maxwell, by John G. Hayden, sheriff of Jackson county, Missouri, and it is admitted that the deed was signed and executed by said Hayden as it purports to have been, and that the original is not within the possession, custody or control of the defendants or any of them, and I ask that it be marked "Exhitit H. S."

By Mr. Traber—That is also objected to for the reason that the court rendering the judgment under which the execution was issued and the sale made had no jurisdiction over the defendants, or any of them, nor over the property sold.

By Mr. Southern—Now I offer in evidence the original deed of John Maxwell, by John G. Hayden, the sheriff of Jackson county, Missouri, to John Montgomery, marked "Exhibit I S," with accompanying certificates and acknowledgment, and it is admitted that the same was signed and executed as it purports to have been.

By Mr. Traber—That is objected to because it is incompetent, and because the court rendering the judgment under which the execution was levied and the land described therein was sold, had no

jurisdiction over the person or the property described in the deed, and the judgment was void.

By Mr. Southern – I now offer in evidence an original deed of John Montgomery to John H. Hedrick, marked "Exhibit J S," with accompanying certificates and acknowledgment of record, and it is admitted that the deed was signed and executed as it purports to have been; and also it is admitted that it was recorded as it purports to have been recorded.

By Mr. Traber—We have no objection to that except that it is incompetent, irrelevant and immaterial.

By Mr. Southern—Now I offer an original deed from John G. Hayden, late sheriff of Jackson county, Missouri, to the heirs of John Kelly, deceased, with the acknowledgment thereto, and it is admitted that the same was executed and signed as it purports, marked ——

By P. P. Kelley—We object to that on the ground that it is incompetent and irrelevant; and for the further reason that the court authorizing the sale of the property by the sheriff did not have jurisdiction of the subject matter nor of the parties, and that the deed does not contain the recitals required by the law.

By Mr. Southern—Defendant now offers in evidence deed of John Kelly, estate, by George W. Buchanan, administrator, to J. H. Hedrick, marked "Exhibit L S," with the accompanying acknowledgments, and it is admitted that it was signed and executed as it purports to have been.

By P. P. Kelley—The same objection is made as was made to the last deed offered in evidence, and I make the further objection that is not acknowledged as required by law.

By Mr. Southern—I now offer on behalf of defendants copy of deed of Robert G. Smart, administrator of the estate of John Maxwell and others, by the former sheriff, John G. Hayden, to Thomas H. Swope, with certificates as appended thereto, and it is admitted that the original is not in the possession or under the control of the defendants, and that it was signed and executed as it purports to have been, and ask that it be marked "Exhibit M S."

By Mr. Kelley—That is objected to for the reason that it is incompetent, irrelevant and immaterial, and for the reason that the court authorizing the sale of the property had no jurisdiction over the subject matter or the parties, and the party executing the deed had no authority as a matter of law to execute it, or as a matter of fact had no authority to execute it; and it is objected to for the further reason that it does not describe the property in controversy in this case, nor any part of it.

By Mr. Southern—Defendant now offers in evidence copy of a deed from Thomas H. Swope to Jacob Tindall with accompanying certificates and acknowledgments, and it is admitted that the same was signed and executed as it purports to have been, marked "Exhibit N S;" it is further admitted that the original is not in the possession nor under the control of the defendants nor any of them.

By Mr. P. P. Kelley—That is objected to for the reason it is incompetent, irrelevant and immaterial; and for the further reason on the ground that it is not acknowledged according to law.

By Mr. Southern—On behalf of the defendants I now offer an original deed from Jacob Tindall to John H. Hedrick, with the accompanying acknowledgments and certificates, and it is admitted that it was signed and executed and recorded as it purports to have been, marked "Exhibit O S."

By P. P. Kelley—That is objected to for the reason that it is incompetent and immaterial, and for the reason that it does not appear that the grantor had any interest in the property sought to be conveyed and described in the conveyance.

By Mr. Southern—On behalf of the defendants I now offer in evidence an original deed from Joseph C. Irwin and wife to William Eaton, with acknowledgment and certificates of record, and it is admitted that the said deed was signed and executed as it purports to have been signed and executed, and ask that it be marked "Exhibit P. S."

By P. P. Kelley—That is also objected to because it is irrelevant, incompetent and immaterial, and for the further reason that the grantors had no interest in the property described in the conveyance.

By Mr. Southern—We now offer a copy of a deed from S. H. Woodson and wife to Adolphus Kean and others with accompanying certificates and acknowledgment, and it is admitted that the same was signed and executed as it purports to have been, and that the original thereof is not in the possession of the defendants, or any of them, nor is it under their control, and ask that it be marked "Exhibit O. S."

By P. P. Kelley—The same objection is made to this deed as was made to the last deed offered in evidence, with the addition of the further objection that the acknowledgment is not in due form of law, nor as required by the laws of the state of Missouri.

By Mr. Southern—Now I offer the original deed from Maria McClanahan and Susan Nelson to William Eaton, with the accompanying acknowledgments, and it is admitted that the said deed was signed and executed and recorded as it purports to have been, and ask that it be marked "Exhibit R. S."

By P. P. Kelley—That is objected to for the reason that it is immaterial, irrelevant and incompetent, and for the further reason that it is not acknowledged as required by law, and that the grantors named in the conveyance had no interest in the property described in said conveyance.

By Mr. Southern—I now offer an original deed from William Eaton to Granville Hedrick, trustee, with accompanying acknowledgment and certificate of record, and it is admitted that the same was signed and executed and recorded as it purports to have been, and ask that it be marked as "Exhibit S. S."

By P. P. Kelley—The same objection is made to this deed offered in evidence as was made to the first deed offered in evidence except as to its acknowledgment; and the further objection is made that the grantee named in the deed was not the lawful trustee for the church at the time the deed was executed, nor was he the lawful trustee for the church at any time subsequent to the date of its execution.

By Mr. Southern—I now offer in evidence, on behalf of the defendants, the original deed from J. R. Hedrick and wife to Granville Hedrick, president of the Church of Christ, and trustee in trust for the said Church of Christ. Now, right after the words "Church of Christ," as it appears in here, are the words in parenthesis "Latter Day Saints," and ask that the same be marked as "Exhibit T. S," and it is admitted that it was signed and executed and recorded as it purports to have been.

By P. P. Kelley—The same objection is made to that deed as was made to the other deed last offered in evidence.

Maxwell Heirs, by John G. Hayden, Sheriff, to the Heirs of John Kelly, Deceased.

EXHIBIT ——

To all persons to whom these presents shall come, I, John G. Hayden, late the sheriff of Jackson county, in the state of Missouri, send greeting:

Whereas in a certain writ for the petition of real estate in the circuit court for the county of Jackson, in the state of Missouri, pending, wherein Sam'l H. Woodson was plaintiff and Robert G. Smart, as administrator of the estate of John Maxwell, deceased, Matilda Maxwell, Emmett C. Maxwell, Thomas F. Maxwell, Wm. A. Maxwell, Theodore H. Maxwell, Ambrose A. Maxwell, Ann Mary Maxwell, John A. Maxwell and Robert C. Maxwell were defendants, a judgment of partition of the real estate described in said petition, was rendered by said court at the March term of said court, A. D. 1859, among the parties interested according to their rights as then ascertained and declared by the said court, and forasmuch as it then appeared to said court that the partition of said real estate described in said petition, and the judgment of said court could not be made in kind between the said parties according to their rights, without great injury to them, it was further then ordered by said court that the said real estate be sold by the sheriff of said county of Jackson, on a credit of nine and twenty-one months, and that the purchaser execute bonds to the sheriff aforesaid, for said purchase money, one-half payable in nine and the other half in twenty-one months from the day of sale with ten per cent. interest after due, and that said sheriff report his proceedings in the premises to said court.

And whereas, Afterwards a copy of said order for the sale of said real estate was made by the clerk of said court dated the —— day —— —— A. D. 1859, directed to the sheriff of said county of Jackson, returnable to the then next September term of said court, A. D. 1859, commanding the said sheriff to sell the said real estate described in said judgment and order, and that he report his proceedings in the premises to said court, which said copy of said order of sale was to John W. Burrus, then the sheriff of said county, duly delivered under and by virtue of which said order of sale the said John W. Burrus, as sheriff of said county of Jackson, did, pursuant to the authority in him as such sheriff vested, on the 15th day of September, A. D. 1859, at the courthouse door in the city of Independence, in said county of Jackson, between the hours of nine of the clock A. M. and five of the clock P. M. of said day, and while the circuit court for said county was in session, at the September term thereof A. D. 1859, proceed to expose the said real estate for sale in separate parcels, publicly by auction, on a credit of nine and twenty-one months, the purchaser to give bond with good security for the purchase money, having given at least twenty days previous notice of the time, terms and place of sale, and a description of said real estate and where situated, by a notice signed by him, said John W. Burrus, as such sheriff, and published in the "Democratic Gazette," a newspaper published weekly in Jackson county.

Said real estate having been so exposed to sale pursuant to the terms of said notice, and at said sale John Kelly having bid for lot No. (16) sixteen in Woodson & Maxwell's Addition to Independence, situated in the city of Independence, in said county of Jackson, in the state of Missouri, the sum of $116.00 was the highest bidder therefor, and then became the purchaser thereof for the said sum so bid by him therefor as aforesaid, and thereupon the said John Kelly executed to the said John W. Burrus as such sheriff his two bonds for said purchase money, with security

according to the terms of said sale, and at said September term, A. D. 1859, of said court, the said John W. Burrus as such sheriff, made report of his proceedings touching the sale of the said real estate described in said order of said court including the said real estate hereinbefore described, which report was by said court duly approved.

And whereas, The said John Kelly having paid to the said John W. Burrus a portion of the said purchase money, to-wit: The sum of fifty-eight dollars, departed this life intestate, leaving the balance of said purchase money unpaid.

And whereas, Afterwards, to-wit: Sometime in the year A. D. 1861, the said John W. Burrus departed this life without having collected the balance of the said purchase money for said lot of land;

And whereas, At the March Term, A. D. 1865, of said court an order was made in said partition suit by said court, transferring to the undersigned, John G. Hayden, then the sheriff of said county of Jackson, all of the business then uncompleted in said partition suit, and by virtue of said order the undersigned as such sheriff was fully authorized to collect the balance of said purchase money for said lot of land so purchased by the said John Kelly at said sale, and to execute to him a deed therefor, or to his heirs after his death.

And whereas, Since the date of the said order last mentioned, George W. Buchanan the administrator of the estate of the said John Kelly, deceased, has paid to me the balance of said purchase money for said lot of land, to-wit: The sum of ninety-eight and forty-five hundredth dollars, which sum includes the interest due, the receipt of which is acknowledged.

Now, therefore, in consideration of the premises, and more especially in consideration of the said purchase money so paid to said Burrus and to me, as above recited:

I, the said John G. Hayden, late sheriff of Jackson county, by virtue of the authority in me by law vested, do hereby bargain, sell and convey unto "the heirs of the said said John Kelly, deceased," all the right, title, claim and interest which was vested in the said parties to said partition suit, and each of them, in and to the said lot of land hereinbefore described, and all the right and title thereto which I, as such late sheriff, can or may convey, to have and to hold the same with the appurtenances unto the heirs of said John Kelly, deceased, forever.

In witness whereof, I, the said John G. Hayden, as such late sheriff, do hereto set my hand and seal, this 19th day of September, A. D. 1867.

JOHN G. HAYDEN. [Seal.]

STATE OF MISSOURI, } ss.
COUNTY OF JACKSON. }

Be it remembered that John G. Hayden, who is personally known to the court to be the late sheriff of Jackson county, and the same person whose name is subscribed to the foregoing instrument of writing, this day personally appeared in open court and acknowledged the same to be his act and deed for purposes therein expressed.

In testimony whereof, I, Reuben Wallace, clerk of the circuit court within and for the county aforesaid, have hereunto set my hand and affixed the seal of said court, at office in Independence, this 20th day of September, A. D. 1867.

R. WALLACE, Clerk.
By N. E. Moore, Dept.

John G. Hayden, Sheriff, to John Montgomery.

Sheriff's Deed dated September 9, 1867; filed September 30, 1868; recorded September 30, 1868; Book 62, page 461; consideration $106.00.

Testimony, page 704, Exhibit I S.

To all persons to whom these presents shall come, I, John G. Hayden, late sheriff of the county of Jackson, in the state of Missouri, send Greeting:

Whereas, in a certain suit for the partition of real estate in the circuit court for the county of Jackson, in the state of Missouri, pending, wherein Samuel H. Woodson was plaintiff, and Robert G. Smart, as administrator of the estate of John Maxwell, deceased, Matilda Maxwell, Emmett C. Maxwell, Thomas F. Maxwell, William A Maxwell, Theodore H. Maxwell, Ambrose A. Maxwell, Ann Mary Maxwell, John A. Maxwell and Robert C. Maxwell were defendants, a judgement of partition of the real estate described in said petition was rendered by said court at the March term of said court, A. D. 1859, among the parties interested according to their rights as therein ascertained and decreed by the said court, and for, as it then appeared to said court, the partition of said real estate described in said petition and the judg-

ment of said court could not be made in kind between the said parties according to their rights without great injury to them, it was then further adjudged by said court that said real estate described as aforesaid be sold by the sheriff of said county of Jackson on a credit of nine and twenty-one months, and that the purchaser execute bonds to the sheriff aforesaid for said purchase money, one-half in nine months and the other in twenty-one months from the date of sale, with ten per cent interest after due, and that said sheriff report his proceedings in the premises to said court, and afterwards a copy of said order for the sale of said real estate was made by the clerk of said court dated the day of ——— ——— A. D. 1859, directed to the sheriff of said Jackson county, and returnable to the next September term of said court, 1859, commanding the said sheriff to sell the said real estate described in said judgment, and that he report his proceedings in the premises to said court, which copy of said order of sale was to John W. Burrus, then the sheriff of said county, duly delivered, under and by virtue of which order of sale the said John W. Burrus, as sheriff of said county of Jackson, pursuant to the authority in him as such sheriff vested, on the 15th day of September, A. D 1859, at the court house door in the city of Independence in said county of Jackson, between the hours of nine o'clock A. M and five o'clock P. M of said day, while the circuit court of said county was in session at the September term thereof, 1859, proceed to expose the said real estate for sale in separate parcels public, by auction, on a credit of nine and twenty-one months, the purchaser to give bonds with good security for the purchase money, having given at least twenty days' notice of the time, terms and place of sale, and a description of the said real estate, and where situated, by a notice signed by him, the said John W. Burrus, as such sheriff, and published in the "Democratic Gazette," a newspaper published weekly in said Jackson county, said real estate having been so exposed for sale pursuant to the terms of said order and said notice, and at said sale John Montgomery became the highest and last bidder for lots numbered nine (9) and twenty (20) in said Woodson & Maxwell's Addition to the town of Independence, Missouri, said lots being a part of the real estate mentioned in the decree of said court and in the notice published as aforesaid by the said Burrus, and the said Montgomery being the highest and last bidder for the said lots numbered nine (9) and twenty (20), in said Woodson & Maxwell's Addition, at and for the sum of One Hundred and Six Dollars, became the purchaser thereof at and for the said sum, and thereupon executed to the said Burrus, sheriff as aforesaid, his two bonds for the purchase money of said lots with security according to the terms of said sale, and at said September term 1859 of said court said Burrus, sheriff as aforesaid, made report of his proceedings touching the sale of said real estate described in said order of said court, including all real estate or lots hereinbefore described, which report was by said court duly approved; and whereas, John W. Burrus, sometime in the year 1861, departed this life without having collected all of the purchase money of said lots herein mentioned; and whereas, at the March term A. D. 1865, of the said court an order was made in said partition suit by said court transferring to the undersigned, John G Hayden, then the sheriff of said county of Jackson, all the business uncompleted in said partition suit, and by virtue of said order the undersigned as such sheriff was authorized to collect the purchase money of said lots of land so purchased by said Montgomery aforesaid, and to execute a deed therefor to the said Montgomery; and whereas, the said John Montgomery has paid the sum of $186.00 and all of the interest thereon, the same being the purchase money in the aggregate for both the lots aforesaid:

Now, therefore, in consideration of the premises, especially in consideration of the purchase money aforesaid and the interest thereon paid to me, the said John G. Hayden, the receipt of which is hereby acknowledged, I, said John G. Hayden, late sheriff of said Jackson county, by virtue of the authority in me vested by law, do hereby grant, bargain and sell and convey unto the said John Montgomery all the right, title and interest which was vested in said parties to said partition suit and each of them in and to the said lot 20 (and other lots) in Woodson & Maxwell's Addition to Independence, Missouri, and all the right and title thereto which I, as such late sheriff, can or may convey, to have and to hold the same with the appurtenances thereto belonging unto the said John Montgomery and his heirs and assigns forever.

In testimony whereof, I, said John G. Hayden, as such late sheriff, do hereunto set my hand and seal this 19th day of September A. D. 1867.

JOHN G. HAYDEN. [Seal.]

STATE OF MISSOURI, } ss.
COUNTY OF JACKSON, }

Be it remembered that John G. Hayden, who is personally known to the court to be the late sheriff of Jackson county, and the same person whose name is subscribed to the foregoing instrument of writing, this day personally appeared in open court and acknowledged the same to be his act and deed for the purposes therein expressed.

In testimony whereof, I, Reuben Wallace, clerk of the circuit court, within and [Seal] for the county of Jackson, hereunto set my hand and affix the seal of said court, at office, in the city of Independence, this 20th day of September A. D. 1867.

REUBEN WALLACE, Clerk.
By N. E. MOORE, D. C.

JOHN G. HAYDEN, SHERIFF, TO JOSEPH C. IRWIN.

Sheriff's Deed dated March 23, 1867; Filed December 8, 1870; Recorded December 8, 1870; Book 82, page 255; Consideration $1,077.37.

EXHIBIT H. S.

To all whom these presents shall come, I, John G. Hayden, former sheriff of Jackson county, send greeting:

Whereas, At the March term, A. D. 1859, of the circuit court of Jackson county, in a certain partition suit therein pending, wherein Samuel H. Woodson is plaintiff, Robert G. Smart, as administrator of the estate of John Maxwell, deceased, Matilda Maxwell, Emmett C. Maxwell, Thomas F Maxwell, William A. Maxwell, Theodore H. Maxwell; Ambrose A. Maxwell, Ann Mary Maxwell, John A. Maxwel, Robert C. Maxwell were defendants, it was ordered, adjudged and decreed that certain real estate in said order and decree described, belonged jointly to the parties to said suit, and the rights of the parties thereto described and set forth:

And whereas, It was also ordered that partition of said real estate be made among the parties thereto according to their respective rights, and that said real estate was not susceptible of division, and that partition thereof could not be made without great prejudice to the owners thereof:

Whereupon, It was further ordered that the sheriff of Jackson county should proceed to sell the said real estate on a credit of one-half the purchase money payable in nine months and the other half thereof in twenty-one months, the purchaser giving bond with sufficient security, drawing the highest legal rate of interest after due until paid, and that he conduct such sale as required by law in selling real estate under writ of fieri facias, a copy of which said order and decree duly certified by the clerk of said circuit court, dated July 27th, 1859, was delivered to John W. Burrus, sheriff of said Jackson county, by virtue of which said order said Burrus as sheriff did, on the 15th day of September, 1859, at the court house door in the city of Independence, Jackson county, Missouri, between the hours of nine o'clock A. M. and five o'clock P. M. of that day, and during the session of said circuit court of said county, and at the September term thereof 1859, proceed to offer for sale to the highest bidder, on a credit of nine and twenty-one months, the purchaser to give bond with good and sufficient security for the purchase money, and the real estate mentioned in said order and decree, having previously been given twenty days' notice of time, terms and place of sale and a description of the property to be sold, by a notice signed by said Burrus, as sheriff as aforesaid, and published in the "Democratic Gazette," a newspaper published weekly in Jackson county, and Joseph C. Irwin being then and there the highest and last bidder, became the purchaser of a portion of said real estate, to-wit: Lots 17, 18, 19, and 22 (and other lots), in Woodson & Maxwell's Addition to the city of Independence, at the price and sum of One Thousand, Seventy-seven and Thirty-seven Hundredth Dollars, for which sum the said Joseph C. Irwin executed his two bonds payable in nine and twenty-one months, with R. S. Mize as security. A full report of all his proceedings touching said sale said Burrus made to the circuit court of said Jackson county, at their September term, 1859, at which said term of said court said report was duly approved.

And, whereas, Said John W. Burrus, collected one of said notes and afterward, to-wit: In the year 1861, the said John W. Burrus departed this life without having collected the remainder of said purchase money, and without having made a deed to said lots;

And, whereas, At the March term, 1765, of said circuit court, an order was made

in said partition suit transferring all unfinished business in said cause to the said sheriff of said Jackson county, directing said sheriff to proceed to complete the unfinished business in said cause;

And, whereas, John G. Hayden was at the time of said last named order the sheriff of said Jackson county, and as such undertook the completion of the unfinished business aforesaid, and has collected the remaining notes executed for the purchase money of the lots aforesaid mentioned, principal and interest of the sum of Six Hundred and Sixty-three Dollars.

Now, therefore, by virtue of the premises aforesaid and of the power in me vested, I, John G. Hayden, the former sheriff of Jackson county, in consideration of the sum of six hundred and sixty-three dollars paid as aforesaid, do hereby grant, bargain and sell, alien and convey unto the said Joseph C. Irwin, his heirs and assigns, all the right, title and interest of, in and to lots numbered 17, 18, 19, and 22, in Woodson & Maxwell's Addition to the city of Independence, which I can convey by virtue of the powers aforesaid, to have and to hold the interest hereby conveyed unto the said Joseph C. Irwin, his heirs and assigns forever.

In testimony whereof, I, John G. Hayden, former sheriff as aforesaid, hereunto set my hand and seal, this 23d day of March, 1867.

JOHN G. HAYDEN. [Seal]

STATE OF MISSOURI, } ss.
COUNTY OF JACKSON, }

I, Reuben Wallace, clerk of the circuit court within and for the county aforesaid, certify that John G. Hayden, late sheriff of Jackson county, who is personally known to the court to be the same person whose name is subscribed to the foregoing deed, this day personally appeared in open court and acknowledged the same to be his act and deed for the purposes therein mentioned.

In testimony whereof, I have hereunto set my hand and affixed the seal of [seal] said court at office in the city of Independence, this 23d day of March A. D. 1867.

R. WALLACE, Clerk.
By N. E. MOORE, Dep.

John G. Hayden, Sheriff, to Thomas H. Swope.

Sheriff's Deed, dated March 6, 1867; Filed May 14, 1867; Recorded May 14, 1867; Book 52, page 68; consideration $290.25.

EXHIBIT M. S.

To all to whom these presents shall come, I John G. Hayden, former sheriff of Jackson county, send Greeting:

Whereas, At the March term, A. D. 1859, of the circuit court of Jackson county, in a certain partition suit therein pending, wherein Samuel H. Woodson was plaintiff and Robert G. Smart, as administrator of the estate of John Maxwell, deceased, was defendant, it was ordered, adjudged, and decreed that certain real estate in said order and decree described, belonged jointly to the parties to such suit, and the rights of the parties thereto described and set forth;

And whereas, It was also ordered that partition of said real estate be made among the parties thereto according to their respective rights, and that said real estate was not susceptible of division, and that partition thereto could not be made without great prejudice to the owners thereof;

Whereupon, It was further ordered that the sheriff of Jackson county should proceed to sell the said real estate on a credit of one half the purchase money payable in nine months and the other half thereof in twenty-one months, the purchaser giving bond with sufficient security, drawing the highest legal rate of interest after due until paid; and that he conduct such sale as required by law in selling real estate under writ of fieri facias, a copy of which said order and decree, duly certified by the clerk of said circuit court, dated July 27th, 1859, was delivered to John W. Burrus sheriff of said Jackson county, by virtue of which said order said Burrus as sheriff did, on the 15th day of September, 1859, at the court house door in the city of Independence, Jackson county, Missouri, between the hours of nine o'clock A. M. and 5 o'clock P. M. of that day, and during the session of said circuit court of said county, and at the September term thereof, 1859, proceed to offer for sale to the highest bidder, on a credit of nine and twenty-one months, the purchaser to give good and sufficient security for the purchase money, and the real estate mentioned in said order and decree having previously been given at least twenty days notice of the time, terms

and place of sale, and a description of the property to be sold, by notice signed by said Burrus, as sheriff as aforesaid, and published in the "Democratic Gazette," a newspaper published weekly in Jackson county, and Thomas H. Swope being then and there the highest and best bidder, became the purchaser of a portion of said real estate, to-wit: Lots 21 and 23 (and other lots) in Woodson & Maxwell's Addition to the city of Independence, at the price and sum of Three Hundred and Eighty dollars, for which sum the said Thomas H. Swope executed his two notes payable in nine and twenty-one months, with Lot Cotman as security. A full report of all his proceedings touching said sale said Burrus made to the circuit court of said Jackson county at their September term, 1859, at which said term of said court said report was duly approved.

And whereas, Said John W. Burrus collected one of said notes and afterwards, to-wit: In the year 1861, said John W. Burrus departed this life without having collected the remainder of said purchase money, and without having made a deed to said lots;

And whereas, At the March term, 1865, of said circuit court, an order was made in said partition suit transferring all unfinished business in said cause to the said sheriff of said Jackson county, directing said sheriff to proceed to complete the unfinished business in said cause;

And whereas, John G. Hayden was at the time of said last named order the sheriff of said Jackson county, and as such undertook the completion of the unfinished business aforesaid, and has collected the remaining notes executed for the purchase money of the lots aforesaid mentioned, principal and interest of the sum of Two Hundred and Ninety-nine and 25-100th Dollars

Now, therefore, by virtue of the premises aforesaid and of the power in me vested, I, John G. Hayden, the former sheriff of Jackson county, in consideration of the sum of Two Hundred, Ninety-nine and 25 100th Dollars paid as aforesaid, do hereby grant, bargain, alien and convey unto the said Thomas H. Swope, his heirs and assigns, all the right, title, interest and estate of, in and to lots 11, 21 and 23, Woodson & Maxwell's Addition to the said city of Independence, which I can convey by virtue of the powers aforesaid.

To have and to hold the interest thereby conveyed unto the said Thomas H. Swope, his heirs and assigns forever.

In testimony whereof, I, John G Hayden, former sheriff as aforesaid, hereunto set my hand and seal this 14th day of March, 1867.

JOHN G. HAYDEN, Late Sheriff. [Seal.]

STATE OF MISSOURI, } ss.
COUNTY OF JACKSON, }

Be it remembered that John G. Hayden, who is personally known to the court to be the late sheriff of Jackson county, the same person whose name is subscribed to the foregoing instrument of writing, this day personally appeared in open court and acknowledged the same to be his act and deed for the purposes therein contained.

In witness whereof, I, Reuben Wallace, clerk of the circuit court within and for the county aforesaid, have hereunto set my hand and affixed the seal of said court at office in Independence, this 16th day of March, A. D 1867.

[Seal] REUBEN WALLACE, Clerk.
By N. E. MOORE, Dep.

Thomas H. Swope to Jacob Tindall.

Warranty Deed dated May 13, 1866; filed June 4, 1866; recorded June 4, 1866; Book 47, page 129; Consideration $250.00.

EXHIBIT N S.

Grant, bargain and sell unto the said Jacob Tindall the following described tracts or parcels of land situate in the county of Jackson and state of Missouri, that is too say: Lot No. 21, in Woodson & Maxwell's addition to the city of Independence, Missouri, as per record of the original p'at.

To have and to hold the premises hereby conveyed unto the said Jacob Tindall, his heirs and assigns forever. Grantor hereby covenanting to warrant and defend the title to the premises hereby conveyed against the claims of every person whatsoever.

In witness whereof, I have hereunto subscribed my name and affixed my seal, this 13th day of May, 1866

THOMAS H. SWOPE. [Seal.]

STATE OF MISSOURI, } ss.
COUNTY OF JACKSON. }

Be it remembered that Thomas H. Swope, who is personally known to the undersigned, a Notary Public within and for said county, to be the person whose name is subscribed to the foregoing deed as party thereto, this day appeared before me and acknowledged that he executed and delivered the same as his voluntary act and deed for the uses and purposes therein mentioned. Given under my hand this 30th day of May, 1866.

[No Seal.] OSCAR F. MYERS, N. P.

Jacob Tindall to John H. Hedrick.

Warranty Deed, dated August 22, 1867; filed September 24, 1867; Recorded September 24, 1867; Book 50, page 331; Consideration $250.00.

EXHIBIT O S.

Grant, bargain and sell unto the said John H. Hedrick the following described tracts or parcels of land situate in the county of Jackson, in the state of Missouri, that is to say: Lot No. 21, in Woodson & Maxwell's addition to the city of Independence, Jackson county, Missouri, as per record of original plat.

To have and to hold the premises hereby conveyed unto the said John H. Hedrick, his heirs and assigns forever; Grantor covenanting to warrant and defend the title hereby conveyed against the claim of every person whatsoever.

In witness whereof, I have hereunto subscribed my name and affixed my seal, this 22d day of August, 1867. JACOB TINDALL. [Seal.]

STATE OF MISSOURI, } ss.
COUNTY OF JACKSON. }

Be it remembered that Jacob Tindall, who is personally known to the undersigned, a Notary Public within and for said county, to be the person whose name is subscribed to the foregoing deed, as party thereto, this day appeared before me and acknowledged that he executed and delivered the same as his voluntary act and deed for the uses and purposes therein mentioned. Given under my hand and notarial seal this 22d day of August, 1867.

[Seal.] M. V. P. PARKER,
Notary Public.

Joseph C. Irwin and Mary, his wife, to William Eaton.

Warranty Deed dated July 9, 1873; Filed July 11, 1873; Recorded July 11, 1873 Book 104, page 311; Consideration $525.

EXHIBIT P S.

Grant, bargain and sell unto the said William Eaton the following described tract or parcel of land situated in the county of Jackson and state of Missouri, that is to say: Lots number 17, 18, 19 and 22 in Woodson & Maxwell's Addition to the city of Independence, county of Jackson, state of Missouri.

To have and to hold the premises hereby conveyed unto the said William Eaton, his heirs and assigns forever; the said Joseph C. Irwin and Mary his wife hereby covenanting to and with the said William Eaton, heirs and assigns for themselves, their heirs, executors and administrators, to warrant and defend the title to the premises hereby conveyed, against the claims of every person whatsoever.

In witness whereof we have hereunto subscribed our names and affixed our seals this 9th day of July, 1873.

Witness: A. F. CALLAHAN, JOSEPH C IRWIN. [Seal.]
GEO. STEWART. MARY IRWIN. [Seal.]

STATE OF KANSAS, } ss.
COUNTY OF LEAVENWORTH. }

Be it remembered that Joseph C. Irwin and Mary Irwin, his wife, who are personally known to the undersigned, a Notary Public within and for said county, to be the persons whose names are subscribed to the foregoing deed, as parties thereto, this day appeared before me and acknowledged that they executed and delivered the same as their voluntary act and deed for the uses and purposes therein mentioned; and the said Mary Irwin, being by me made acquainted with the contents of said deed, acknowledged, on an examination apart from her said husband, that she exe-

cuted the same and relinquishes her dower in the real estate therein mentioned, freely, and without compulsion or undue influence of her said husband.

Given under my hand and seal this 9th day of July, 1873.

A. F. CALLAHAN, Notary Public.

Samuel H. Woodson and Margaret J., his wife. to Adolphus Kean and Susan Kean, children of the late Alonzo Kean.

Warranty Deed dated November 23, 1860; Filed November 27, 1860; Recorded November 27, 1860, Book 56, page 240; Consideration $150.

EXHIBIT Q S.

Sell and convey unto the said parties of the second part the following described tract or parcel of land lying and being in the county of Jackson and state aforesaid, to-wit: Lot 15 in Woodson & Maxwell's Addition to the city of Independence

To have and to hold the same unto the said parties of the second part and to their heirs and assigns forever; Grantors covenanting to warrant and defend the title to the premises against the lawful claims of all persons whatsoever.

In witness whereof, the said parties of the first part have hereunto set their hands and seals, the day and year first above written.

S. H. WOODSON. [Seal.]
MARGARET J. WOODSON. [Seal.]

STATE OF MISSOURI, } ss.
COUNTY OF JACKSON, }

Be it remembered, that on this 26th day of November, 1860, before me, the undersigned clerk of circuit court within and for the county and state aforesaid, came Samuel H. Woodson and Margaret J. Woodson, his wife, who are personally known to me to be the persons whose names are subscribed to the foregoing instrument of writing as parties thereto, and they acknowledge the same to be their act and deed for the purposes therein mentioned; she, the said Margaret J. Woodson being by me first made acquainted with the contents of said instrument upon examination apart from her said husband, acknowledged that she executed the same and relinquishes her dower in the real estate therein mentioned freely, and without compulsion or undue influence of her said husband.

In witness whereof, I have hereunto set my hand and affixed my seal at office in the city of Independence, the day and year last above written.

[Seal.] SAMUEL D. LUCAS, Clerk.
BY C. D. LUCAS, D. C.

Maria McClanahan and Susan Nelson to William Eaton.

Warranty Deed dated March 7, 1874; Filed March 7, 1874; Recorded March 7, 1874; Book 104, page 517; Consideration $200.00.

EXHIBIT R S.

Grant, bargain and sell unto the said William Eaton the following described tract or parcel of land situate in the county of Jackson and state Missouri. that is to say: Lot No. 15, Woodson & Maxwell's Addition to the town (now city) of Independence, Missouri.

To have and to hold the premises hereby conveyed, with all the rights, privileges and appurtenances thereto belonging or anywise appertaining unto the said William Eaton, his heirs and assigns forever. The said Maria McClanahan and Susan Nelson hereby covenanting to warrant and defend the title to the premises hereby conveyed against the claim of every person whatsoever.

In witness whereof, we have hereunto subscribed our names and affixed our seals this 7th day of March, 1874.

MARIA McCLANAHAN. [Seal.]
SUSAN NELSON. [Seal.]

STATE OF MISSOURI, } ss.
COUNTY OF JACKSON, }

Be it remembered that Maria McClanahan and Susan Nelson, who are personally known to the undersigned, a clerk of the county court within and for said county, to be the persons whose names are subscribed to the foregoing deed, as parties thereto, this day appeared before me and acknowledged that they executed and delivered the same as their voluntary act and deed, for the uses and purposes therein mentioned.

Given under my hand and seal of said court this 7th day of March, 1874.
[Seal.] EZRA HICKMAN, Clerk.
By WILL. Z. HICKMAN, Dep. Clk.

John Kelly, Deceased, by Geo. W. Buchanan, Adm'r, to John H. Hedrick.

Adm'r's Deed dated December 12, 1867; Filed December 12, 1867; Recorded December 12, 1867, Book 53, page 526; Consideration $250.00.

EXHIBIT L S.

To all to whom these presents shall come, I, George W. Buchanan, administrator of the estate of John Kelley, deceased, send greeting:

Whereas, The Probate and Common Pleas court, for probate business, of Jackson county, Missouri, at the August term thereof, 1867, viz: on the 5th day of September, 1867, ordered by an entry of record (in renewal of an order theretofore made), that I, as administrator aforesaid, sell at private or public sale, on such credit or time as I should see fit, all the lands and real estate belonging to said estate, or so much thereof as should be sufficient to pay the debts thereof, and

Whereas, Afterward, to-wit: On the 19th day of November, 1867, I, as administrator aforesaid, had said lands and real estate appraised in due form of law by Martin O. Jones, Edwin A. Hickman and James S. Gray, three disinterested householders of said county of Jackson, who afterward, to-wit: On the day and year last aforesaid, having first made the affidavit required by law, appraised said lands and real estate, and made certificate of their said appraisement in due form of law; and said book by its proper order entered of record; and

Whereas, Afterward, to-wit: On the day and year last aforesaid I, as administrator as aforesaid, did by virtue of and pursuant to said order of sale and appraisement, and the power in me vested so to do, sell unto John H. Hedrick that part of said lands and real estate known and described as lot number sixteen (16), in Woodson & Maxwell's Addition to the city of Independence, Jackson county, Missouri, at private sale, at and for the price or sum of Two Hundred and Fifty Dollars, one-half cash and the other one half on twelve months' time, to bear ten per cent. interest from date of sale; and

Whereas, At the November term 1867, of said court, to-wit: On the 21st day of said month 1867, I, as such administrator, made to said court a report verified by my affidavit as the law directs, and accompanied by the affidavit and certificate of appraisement of my proceedings touching said sale, including the manner, time and terms of sale, and of the property sold and to whom sold, all as heretofore set forth, and which said report was thereupon approved by

Whereas, Said John H. Hedrick has elected to and paid me all of said purchase money, the receipt of which I hereby acknowledge.

Now, therefore, in consideration of the premises and of the said sum of Two Hundred and Fifty Dollars to me, said administrator, paid as aforesaid and by virtue of the authority in me vested by law, I, George W. Buchanan, as administrator as aforesaid, do hereby grant, sell and convey unto the said John H. Hedrick, all the right, title and interest which the said John Kelly had at the time of his death, and which his heirs and estate have since acquired of, in and to said real estate, to-wit: Lot No 16 in said Woodson & Maxwell's Addition to said city of Independence, that I might or could sell as such administrator as aforesaid by virtue of said order and appraisement.

To have and to hold the right, title and interest hereby conveyed unto the said John H. Hedrick, his heirs and assigns forever, with all the rights and privileges thereto belonging.

In witness whereof, I, George W Buchanan, as administrator as aforesaid, have hereunto set my hand and seal this 12th day of December, 1867.

GEO. W. BUCHANAN, Adm'r. [Seal]

STATE OF MISSOURI, } ss.
COUNTY OF JACKSON, }

In the Jackson county Probate and Common Pleas court for probate business, November adjourned term, 1867.

Be it remembered that at the term aforesaid, and on the 12th day of December, 1867, amongst others the following proceedings were had and made, viz:

Be it remembered that on the 12th day of December, 1867, personally appeared in open court Geo. W. Buchanan, who is known to the court to be the administrator of the estate of John Kelly, deceased, and whose name is subscribed to a deed by him presented to John H. Hedrick as a party thereto, for certain lands therein

described lying and being situate in the city of Independence, county of Jackson, state of Missouri, and acknowledged the execution of the same by him to be his act and deed for the uses and purposes therein contained, which said acknowledgment is ordered to be spread upon said deed and certified.

I, E. R Hickman, clerk of the county court and ex officio clerk of the probate business of the probate and common pleas court within and for said county, do hereby certify that the foregoing is truly copied from the original acknowledgement of record in my office.

In testimony whereof, I have hereunto set my hand and affixed the seal of said court at office in the city of Independence, this 12th day of December, 1867.

[Seal.] E. R. HICKMAN, Clerk.
By J. W. SWEARINGEN, Dep.

John Montgomery to John H. Hedrick.

Warranty Deed dated September 24, 1867; Filed September 24, 1867; Recorded September 24, 1867; Book 50, page 332; Consideration $250.00.

EXHIBIT J. S.

Grant, bargain and sell unto the said John H. Hedrick the following described tracts or parcels of land situate in the county of Jackson, in the State of Missouri, that is to say: Lot No. 20, in Woodson & Maxwell's Addition to the town of Independence, Missouri.

To have and to hold the premises hereby conveyed unto the said Hedrick, his heirs and assigns forever; I, the said John Montgomery, hereby covenanting to warrant and defend the title to the premises hereby conveyed against the claim of every person whatsoever.

In witness whereof, I have hereunto set my name and affixed my seal, this 24th day of September, 1867. J. MONTGOMERY. [Seal]

STATE OF MISSOURI, } ss.
COUNTY OF JACKSON, }

Be it remembered that John Montgomery, who is personally known to the undersigned, a Justice of the Peace within and for said county to be the person whose name is subscribed to the foregoing deed, as party thereto, this day appeared before me and acknowledged that he executed and delivered the same as his voluntary act and deed for the uses and purposes therein mentioned.

Given under my hand, at Independence, Missouri, this 24th day of September, 1867. WILLIAM PEACOCK, J. P.

John H. Hedrick and wife, Elizabeth Ann Hedrick, to Granville Hedrick, Trustee.

Deed dated November 8, 1869; Filed November 12, 1869; Recorded November 12 1869; Book 73, page 1; Consideration $750.00.

EXHIBIT T. S.

This indenture made and entered into this the 8th day of November, in the year of our Lord one thousand eight hundred and sixty-nine, by and between John H. Hedrick and Elizabeth Ann Hedrick, his wife, of the county of Jackson in the state of Missouri, party of the first part, and Granville Hedrick, President of the Church of Christ (of Latter Day Saints), the trustee in trust for the said Church of Christ as the party of second part: Witnesseth, that the said party of the first part for and in consideration of the sum of Seven Hundred and Fifty dollars ($750.00) in hand paid by party of the second part, the receipt whereof is hereby acknowledged by the said party of the first part, have remised, released, sold, conveyed and quit claimed, and by these presents does remise, release, sell, convey and quit-claim unto the said party of the second part as trustee in trust for the aforesaid Church of Christ, and to his official successors as trustees in trust for said Church of Christ, according to the laws and covenants of said Church forever, all the right, title, interest, claim and demand which the said party of the first part has in and to the following described pieces and parcels of land situated in the county of Jackson, in the state of Missouri, that is to say, lot numbered twenty-one (21), Woodson & Maxwell's Addition to the city of Independence, Jackson county, Missouri, as per record of original plat; and also lot numbered twenty (20), in Woodson & Maxwell's Addition to the city of Independence, in the state of Missouri; also lot numbered sixteen (16), in said Woodson & Maxwell's Addition to the city of Independence, Missouri.

To have and to hold all the said premises and the aforesaid tracts and parcels of

real estate hereby conveyed, with all the rights, privileges and appurtenances thereto belonging or in anywise appertaining unto the party of the second part as trustee in trust for the said Church of Christ, for the only proper use, benefit and behoof of the said Church of Christ forever, of which the said Granville Hedrick is now, at this day and date, the president of said Church of Christ, as being composed of its associated members according to the laws and covenants of said church; wherefore the said Church of Christ is the real party of the second part to this deed of conveyance as represented by the term trustee in trust for said Church of Christ. And further, it is hereby covenanted in the decrees of this deed of conveyance to the said Church of Christ that all persons who have dissented or who may hereafter dissent from this said Church of Christ by withdrawal or otherwise separated, or who have been or shall hereafter be separated at any subsequent period by excommunication from this said Church of Christ, shall be a forfeiture, and shall have no claim of right, title or interest whatever, either in law or equity, in the aforementioned real estate specified in this deed.

In testimony whereof, the said party of the first part hath hereunto set their hands and seals the day and year above written.

(\$1 Rev. Stamp attached.) JOHN H. HEDRICK. [Seal.]
ELIZABETH A. HEDRICK. [Seal.]

STATE OF MISSOURI,)
COUNTY OF JACKSON,) ss.

Be remembered that John H. Hedrick and Elizabeth A. Hedrick, who are personally known to the undersigned, a notary public within and for said county, to be the persons whose names are subscribed to the foregoing deed as parties thereto this day appeared before me and acknowledged that they executed and delivered the same as their voluntary act and deed for the use and purposes therein. mentioned. And the said Elizabeth A. Hedrick being by me acquainted with the contents of said deed, acknowledged on an examination apart from her said husband, that she executed the same and relinquishes her dower in the real estate therein mentioned freely and without compulsion or undue influence of her said husband. Given under my hand and notarial seal, this 11th day of November, 1869.

[Seal.] R. W. DAWSON, N. P.

The foregoing deed in trust from John H. Hedrick and wife to Granville Hedrick, trustee, was filed and duly recorded in my office on the 12th day of November, 1869.

A. COMINGO, Recorder.
By H. G. GOODMAN, Deputy.

William Eaton and wife, Mary, to Granville Hedrick, Trustee.

Warranty Deed dated November 5, 1877; Filed November 6, 1877; Recorded November 6, 1877; Book 115, page 452; Consideration \$425.00.

EXHIBIT S. S.

This indenture made and entered into this, the 5th day of November, in the year of our Lord one thousand eight hundred and seventy-seven, by and between William Eaton and Mary Eaton his wife, of the county of Jackson in the state of Missouri, party of the first part, and Granville Hedrick, President of the Church of Christ (of Latter Day Saints), the trustee in trust for the said Church of Christ as the party of the second part, Witnesseth: That the said party of the first part for and in consideration of the sum of Four Hundred and twenty-five dollars (\$425.00) in hand paid by the party of the second part, the receipt whereof is hereby acknowledged by the said party of the first part, has remised, released, sold, conveyed and quit claimed, and by these presents does remise, release, sell, convey and quit claim unto the said party of the second part, as trustee in trust for the aforesaid Church of Christ and to his official successors as trustees in trust for the said Church of Christ, according to the laws and covenants of said church, forever, all the right, title, interest, claim and demand which the said party of the first part has in and to the following described pieces and parcels of land situated in the county of Jackson in the state of Missouri, that is to say: Lots numbered seventeen (17), eighteen (18), nineteen (19) and twenty-two (22), in Woodson & Maxwell's Addition to the city of Independence: also lot number fifteen (15), Woodson & Maxwell's Addition to the town (now city) of Independence, in Jackson county, state of Missouri, as per record of original plat.

To have and to hold all the said premises and the aforesaid tracts or parcels of real estate hereby conveyed, with all the rights, privileges and appurtenances

thereto belonging or in anywise appertaining unto the party of the second part as trustee in trust for the said Church of Christ, for the only proper use, benefit and behoof of the said Church of Christ forever. And the right of conveyance of real estate in this deed pertains to no other church of the same name or similarity of name than that which is specified in this deed, of which said Granville Hedrick is now at this day and date the President of said Church of Christ as being composed of its associated members, according to the laws and covenants of said church; wherefore the said Church of Christ is the real party of the second part to this deed of conveyance as represented by the term trustee in trust for said Church of Christ. And further, it is hereby covenanted in the decrees in this deed of conveyance to the said Church of Christ that all persons who have dissented or who may hereafter dissent from this said Church of Christ by withdrawal or otherwise separated, or who have been or shall hereafter be separated at any subsequent period by excommunication from this said Church of Christ shall be a forfeiture, and shall have no claim of right, title or interest whatever, either in law or equity, in the aforesaid real estate specified in this deed.

In testimony whereof, the said party of the first part hath hereunto set their hands and seals the day and year above written.

WM. EATON. [Seal.]
MARY EATON. [Seal]

STATE OF MISSOURI, } ss.
COUNTY OF JACKSON. }

Be it remembered that on this 5th day of November, A. D. 1877, before the undersigned a notary public within and for the county of Jackson and state of Missouri, personally came William Eaton and Mary Eaton, who are personally known to me to be the same persons whose names are subscribed to the foregoing and annexed instrument of writing as parties thereto, and acknowledged the same to be their act and deed for the purposes therein mentioned: and the said Mary Eaton being by me made acquainted with the contents of said instrument, upon an examination separate and apart from her said husband, acknowledged that she executed the same and relinquishes her dower in the real estate therein mentioned freely and without fear, compulsion or undue influence of her said husband.

In testimony whereof, I have hereunto set my hand and affixed my official seal the year and date above written. My commission expires July 13, 1882.
[Seal.] JOHN A. SEA, Notary Public.

Filed and duly recorded November 6, 1877.
CHAS. D. LUCAS, Recorder.
By THOS. A. LUCAS, D. R.

DEMURRER TO PLAINTIFF'S CASE.

At the end of plaintiff's direct testimony, on page 696 of the testimony, not referred to in plaintiff's abstract, is the following:

Plaintiff's rest their case upon direct testimony.

By Mr. Southern—Defendant here enters a demurrer to the plaintiff's case as made out by the pleadings and by the testimony, and asks for judgment thereon against the plaintiff with costs; and for grounds of demurrer defendants state and say; first:

That under the pleadings and the testimony, as given by the plaintiff in this case, plaintiff is not entitled to recover as against these defendants.

Secondly—Under the pleadings in this case, plaintiff is not entitled to recover as against the defendants.

Thirdly—That under the testimony offered by the plaintiff in this case, plaintiff is not entitled to recover as against the defendants.

Wherefore defendants ask judgment in their favor, with costs of suit.

By Mr. E. L. Kelley—All of which is objected to by the plaintiff as incompetent, irrelevant and immaterial.

STATE OF MISSOURI, }
COUNTY OF JACKSON. } ss.

I, John W. Hinde, recorder of deeds within and for said county of Jackson and state of Missouri, do certify that the foregoing is a full, true and complete transcript of record of the warranty deed acknowledgment and note of record thereon endorsed from William Eaton to Granville Hedrick, President, as the same now remains of record in my office in Independence, Missouri, Book 115, at page 452.

In testimony whereof, I have hereunto set my hand and affixed the seal of [Seal.] said office at my office in the city of Independence, in said county, this 25th day of June, A. D. 1892. JOHN W. HINDE, Recorder.

Certificates, of which the following are copies, were appended to each of the copies of deeds hereinbefore set forth.

STATE OF MISSOURI, }
COUNTY OF JACKSON. } ss.

I, Daniel Murphy, presiding justice of the county court of Jackson county, Missouri, do hereby certify, that the attestation of the instrument of writing hereto attached by John W. Hinde, recorder of deeds of Jackson county, Missouri, is in due form, and by the proper officer of said county.

Witness my hand and official signature, this 28th day of June, A. D. 1892.

DANIEL MURPHY, Presiding Justice
of the County Court of Jackson county, Missouri.

STATE OF MISSOURI, }
COUNTY OF JACKSON. } ss.

I, M. S. Burr, clerk of the county court of Jackson county, Missouri, do hereby certify under my hand and seal of my office, that Daniel Murphy, whose name is signed to the foregoing certificate, is duly commissioned and qualified as presiding justice of the county court of Jackson county, Missouri.

[Seal.] Witness my hand and seal this 28th day of June, A. D. 1892.

M. S. BURR, Clerk.
of the County Court of Jackson county, Missouri.

RICHARD HILL TRUSTEE FOR THE CHURCH OF CHRIST.

It is admitted that prior to the year 1890 Granville Hedrick departed this life, and that in September, 1890, defendant Richard Hill was, upon ex parte proceedings in the Circuit Court of Jackson county, Mo., appointed trustee to execute the trust imposed by the deed from John H. Hedrick and wife, and from William Eaton and wife on said Granville Hedrick; "but it is denied that all title or "ownership, or any title or ownership which said Richard Hill now "has in the premises described in said deeds is held by him in trust "for the Reorganized Church of Jesus Christ of Latter Day Saints or "the Complainant" herein. Said Richard Hill holds said title in trust for the Church of Christ as alleged in the answer, and as it was held by Granville Hedrick the grantee of Willliam Eaton and John H. Hedrick. And it is admitted by the answer "That Respondents do not consider any of the articles adopted by the complainant or its authority after the year 1835 are binding upon Respondents; and further allege that the said Church of Christ—Respondent herein—was at the time of receiving said property now in controversy an association entirely independent of and had no connection with said Complainant, and that said Church of Christ respondent herein never had, and has not now, any connection with said Complainant herein.

PROOF.

(*a*) "Allegation of Amended Bill, page 10; Complainant's Abstract: "That Granville Hedrick was the father of defendant church, "and was a member of Complainant or the mother church until "the year 1860 or thereabouts."

(*b*) "Defendants are now, and from their organization have been, "heretical, and in opposition to the teachings, tenets and ordi- "nances of the mother church, *now* represented by" Complain- "ant.

(*c*) "In prayer, and that upon final hearing the said writ of injunc- "tion be made perpetual, and that all interests held or claimed "by defendants, or any of them, be declared to be held in trust "for Complainant, and that it and they, and each of them be "decreed to convey all title, claimd by them to" Complainant.

TESTIMONY.

Extract from testimony of W. W. Blair, produced, sworn and examined on part of plaintiff, taken from Complainant's Abstract:

"I am one of the editors of The Saints' Herald, and ministerially I am counsellor to Joseph Smith, who is President of the Reorganized Church of Jesus Christ of Latter Day Saints. I became an active member of the ministry and in the Quorum of the Twelve from the month of April, 1857. * * * and so continued until 1873, when I was selected one of the First Presidency, and have been identified with the work of the church in that capacity ever since that time."

On page 124 of Complainant's abstract Mr. Blair is reported as testifying:

"This church was denominated in the prophecy given by Joseph Smith as the Church of Christ. I cannot say whether it went by that name until 1834 or not, or whether there were other names used. So far as that conference is concerned, the minutes of which I have read, the name was changed, and you will observe that it is referred to as the 'Church of Christ,' which I take it to be the name of which it had been known, and then by resolution it was changed to the 'Church of Latter Day Saints.' From my reading and research concerning the matter, even before that conference, I do not think it was always known and designated as the 'Church of Christ,' although that was the name given to it in the outset. I think at the same time it was known by other names from what the official church called it. What its official name was at the time, that is between 1830 and 1834, I think they called it the Church of Christ, and some other names too.

"I think the name of the Church of Latter Day Saints was given it after Edward Partridge came here to Missouri. I think so, for I understand that Edward Partridge was here as early as 1832. The name was adopted in 1834, and that name was changed after that time."

On page 137 of same:

"It is true that in the letter identified and written by me, I

stated as late as June, 1857, in the conference with the Hedrickites at Mackinaw, Ill., which I attended, that if the church endorsed the revelation given April 6th, 1830, they must necessarily endorse all the balance. * * The Hedrickites would take but part of them." On page 134 * * Mr. Blair said: "I visited them what was called the Hedrickites—there was a body of them together at the time. The meeting was Bloomington, Ill. I appeared before that body I think in the winter of 1857 or 1858."

Extract from the testimony of Joseph Smith, President of the Reorganized Church, taken from same abstract, pages 84 and 89:

"There was a faction led by Granville Hedrick located at first, as I understood it, at Bloomington, Ill. Mr. Hedrick published a paper there a portion of the time—I believe it was in 1864."

Same abstract, page 83:

DIRECT EXAMINATION.

"There have been a great many churches since 1844 that have claimed to be the successor of the original church founded in 1830. Their name is almost legion. There was the organization that went West under the presidency of Brigham Young, and there was another under the leadership of James J. Strang, at Voree, Wisconsin, and Beaver Island, in Lake Michigan; there was an organization under Alpheus Cutler, at Fisher's Grove, Iowa, and there was one at Preparation, Iowa, under Charles B. Thompson; and there was one under the leadership of Gladden Bishop at Little Sioux, Iowa; and there was another one attempted by one James Colin Brewster at various times since 1844; there was one by William Bickerton called the 'Bickertonites,' and there was one by Granville Hedrick, and one by William Smith; one by Joseph Morris called the 'Morrisites;' one by a man called William Davis, called the 'Davisites,' or Canaanites, a portion of which are at Walla Walla at the present time, and one by David Whitmer, and that is I believe what is called 'The Church of Christ.' I do not remember any others just now, but there may be others for all I know to the contrary. Yes, sir, there was a faction under the leadership of Sidney Rigdon that settled in the Cumberland Valley, in Pennsylvania."

Extracts from the testimony of Mrs. Mary Eaton, taken from Complainant's Abstract:

"In 1839 I first went to Nauvoo, and in 1840 I lived there. I taught school six miles out; went to meeting frequently at Nauvoo; I belonged to the church there; I was married while I lived there to John E. Page. * * * I knew Joseph Smith, and conversed with him frequently during his life-time; knew his wife, and have been at their house; I was a member of the church at Nauvoo; became a member in 1836 in Canada. * * * I believe I knew all of the Twelve in Nauvoo, every one of them. My husband was one of the Twelve at that time. He was a member of the old church before it was rejected and went to Salt Lake. * * * I met Granville Hedrick first in Illinois. * * * He came to get my husband, Mr. Page, to come to Bloomington. * * * I first knew the church called Hedrickites in Independence, Missouri; I never saw but two of them until I came here, and that was Gran-

ville Hedrick and Jedediah Owens. I think Mr. Page belonged to the Hedrickites. * * * When I speak of the Hedrickites I mean these people here in the city of Independence who call themselves the CHURCH OF CHRIST. I suppose that is the name they call themselves. The Hedrickite church is not the same church as the Reorganized Church of Jesus Christ of Latter Day Saints." Pages 270, 271 and 272: "By the Hedrickite Church, I mean the church that Granville Hedrick was the leader of." Page 269.

ALMA OWEN.

Complainant's Abstract, page 425 and following, reports Complainant's cross-examination of Alma Owen as follows:

CROSS-EXAMINATION.

"Yes, sir, I said that I paid these taxes in the interest of the Church of Christ. I so understand it to be the Defendant in this case. I think I can state when that church was organized; my understanding is that it was organized on the 6th day of April, 1830. I cannot say at what place, because I do not pretend to be very well acquainted with all the facts connected with its organization further than they are recorded in history.

"I understand it was organized in New York. It was organized by Joseph Smith; he was the founder of the church, and with him I understand were associated Oliver Cowdery and others. I understand there were five or six of them associated with him; they claimed to have perfected the organization of the church; that is the original organization, as I understand it from history. I understand it is the same church that is referred to in the deed from John H. Hedrick to Granville Hedrick.

"Q. Was it the same church, or is it the same church that is referred to in the deed from John H. Hedrick to Granville Hedrick as the 'Church of Christ of Latter Day Saints?'

"A. Yes, sir, and it is the same church that I spoke of in my testimony in chief as being the 'Hedrickite faction of the Mormon Church.' That is what people sometimes call it, but we call it the Church of Christ.

"It is the same church that between 1830 and 1833 moved its headquarters from Kirtland, Ohio, to Independence, Missouri. We calculate it to be the same, the same organization; and the same organization that went from Independence, Missouri, because of the persecution to which it was subjected, into Caldwell county, Missouri. And the same organization that was afterwards driven from Caldwell county, Missouri, to Nauvoo, Hancock county, Illinois. It is the same church, yes, sir; that is the way I figure it up.

"Q. Well, what do you figure out?

"A. That it is the same church.

"Q. I will ask you if you know of your own knowledge about the time that Granville Hedrick first united with the church that was organized in 1830?

"A. No, sir, not of my own knowledge. I always understood him to be a member of the original church; I never understood him to be anything else but a member of the original church, always up

to the time of his death. He was the same party who claimed to be the first president of this church here, known as the Hedrickite faction of the church, and he was trustee also of that faction, for the Temple property here, and the Mrs. Hedrick that I have testified about was his wife—wife of Granville Hedrick, and is his widow now. I obtained some of these tax receipts and papers that I testified about in my examination from the widow of Granville Hedrick. I did not get all of them from her. I got the tax receipt that I had from her, excepting what I paid myself from the death of Hedrick up. I do not know that I got all of them. Mr. Hill and I were together at the time I got these papers.

"I do not know when the Hedrickite Church was organized as a faction; do not think it ever was organized as a faction. I am rather inclined to the opinion that it was not, for I always understood it to be a perpetuation of the original church as it was organized in 1830. That is the way I always understood it to be—the perpetuation or succession of the original church that was organized in 1830.

"Yes, sir, I recognize that there was a disorganization of the church that was organized in 1830, along about 1844.

"Yes, sir, a disorganization of the church organization effected on the 6th day of April, 1830, about 1844.

"The church split or was cut up into different factions, and adopted different doctrines. I have heard and have read that such was the fact.

"I do not know what time it was with reference to the time of the disorganization, with reference to the time of the death of Joseph Smith, that the faction of the church that is now known as the Hedrickites faction was organized with officers of any kind.

"I was not a member of the church at that time, I joined it in 1864. Now have been trying to get at the answer I believe you wanted, and I will further state that in 1855 my father and Granville Hedrick and some other men began to associate themselves together in prayer meetings and in other ways, and they looked over these things, and offered amongst themselves and others whom they met their objections to the way that different men who claimed to be the head of the church were trying to build up the cause.

"You can call that organization or what you please; I do not know what you would call that. I do not know of anything more definite that occurred prior to that time; I cannot say that I know that absolutely of my own knowledge, but that is the way I understood the matter took form.

"I could name several who belonged to the church at the time I joined in 1864; there was my father, there was Hedrick, Mr. Charles Reynolds, and William Eaton, and A. C. Haldeman and John T. Clark; These were leading men in the church when I joined.

"My father's name was Jedidiah Owens. I do not know whether he went with Granville Hedrick up into Wisconsin in 1857 or not, to attend the conference; he may have done so for all I know to the contrary. I joined the church in Livingstone county, Illinois. I do

not know that there was any trustees of the church when I joined it. I do not think there was any.

Granville Hedrick was recognized as the president in 1864; I cannot tell when he was elected.

"I am not now the Secretary of the Church of Christ at Independence, no, sir. I cannot state from my knowledge of the records of the church that were at one time in my possession when Granville Hedrick was elected president. I cannot tell the time definitely; I can only state about the time from what I have heard. I do not know, for I was not at the meeting at which he was made president; he was made president some time prior to 1864; I cannot say how long it was, but it was some time prior to that date. I could not say it was prior to 1860.

"Q. What is your best recollection as to that?

"A. I do not know. I was not present, and do not know who ordained Hedrick as president.

"I am a member now of what is known as the Hedrickite branch of the church,--do not know anything to the contrary—and for a number of years have been. I mean the church that is one of the defendants in this suit. I am one of the defendants in this suit,

"I think that my boundaries would not be located within the limits of this branch here at Independence, but according to the strict construction of the matter I might not be located inside the limits of this branch, that is the boundaries of this branch. Yes, sir, there is a limit in the boundary outside of which a person cannot be a member of a branch, if they are located beyond a certain distance. If I am a member of this branch here at Independence, it is because of a special rule made by this church here at Independence. The rule limits the membership to persons who live within a radius of five miles; it used to be ten miles.

"I do not know how many years I was acting trustee for the Hedrickite faction here. I do not know that you would call me a trustee; I was the agent and clerk for several years. I think Granville Hedrick, David Judy and Richard Hill were all of them at one time recognized as the presiding authority, when I was acting agent or clerk. They did not hold that position all at the same time and I mean that I was the agent and clerk under each of them. I acted as agent or clerk under Hedrick, David Judy and Hill, and my action as agent or clerk or both, has been on the understanding or theory held by Hedrick during his lifetime, and Judy and Richard Hill, that it was the legal succession of the church that was organized in 1830.

"It was designed to maintain that organization; that is, it was intended to maintain a working organization. There is no branch of the church organized in the neighborhood where I reside. I do not know any other member of the church to which I belong who lives in the neighborhood that I do. If I do not belong to this branch here in Independence, I do not belong to any branch.

"I am known as what is called a scattered member; that is, a member not belonging to any branch, but I have always considered myself and considered my church privileges as belonging to the

Independence branch. There has never been any other branch organized in this vicinity to which I could belong.

"In the church meetings I would not have a right to vote the same as other members would on questions pertaining to local matters or local interests. I would not consider I had, if a strict construction of the law was placed on the rule, and I would not have the right to vote because of the rule that has been established by the church here. I have no right to vote on any question pertaining to local interests here in this branch. I formerly had that right.

"I believe William Eaton contributed to the fund that was contributed for paying the expenses here; there was a fund that came into my hands from him, but they came into my hands as funds that belonged to the church, from his estate.

"I think his wife at the time was a member of the Reorganized Church of Jesus Christ of Latter Day Saints, the plaintiff in this suit. I do not know whether she contributed anything to the fund or not. I do not remember the date of the death of Granville Hedrick; I think it was in 1881. I have no date to go by; but I think it was then; if I am not greatly mistaken, it was after his death that I received the papers that I testified about, from his widow, Mrs. Hedrick. Whatever papers I got from Mrs. Hedrick I got after the death of Granville Hedrick.

Jason W. Briggs, as reported in Complainant's Abstract, page 398, side page 596, testified: "I was one of the seven men who were ordained apostles at the conference at which the reorganization of the church took place to which I have referred; and I continued to act in that office from that time until 1885." On page 403, same, side page for page of testimony, 612: "He was at two conferences; I am not sure what he did at the conferences whether he took part or not, but I think Granville Hedrick had some to say there at that conference, but I do not know whether he voted or not. He was never accounted a member of the local church." On this point the testimony, page 611, reads as follows, commencing at question 464 and ending with question 468:

"Q. As a matter of fact he was at two conferences?

"A. Yes, sir.

"Q. In that first conference he took part in the proceedings?

"A. I am not aware that he did.

"Q. You would not say whether he did or did not?

"A. Well, I would not say; for there were people there that were not identified with us that took part in the conference in the way of doing some talking, but they were not members of the conference, and what they said was simply by courtesy of the conference. There were persons there who were not identified with us that did some talking; but I do not think they did any voting. *I know that Granville Hedrick never became a member* of the church at all. I think, however, that he had something to say there at that conference although he did not belong to the church.

"Q. You do not know whether he voted or not?

"A. No, sir; he was never accounted a member of the Reorganization; I *know that.*

"Q. And he was never accounted a member of that local church?

"No, sir.

ADVERSE POSSESSION.

"Defendants deny that plaintiff ever exercised any ownership or control over said property; and deny that it has been recognized by the public authorities as church property and not taxable, but aver that defendant church, by its members and its trustees, has for more than twenty years held the possession thereof, and paid the taxes thereon openly, notoriously, and actually and adversely to all the world."

By Mr. Southern.—I offer the tax receipts of the collector of Jackson county for the taxes paid on lots 2, 3, 17, 18, 19, 22 in Woodson & Maxwell Addition to the city of Independence for the year 1866, and it is admitted that the receipt was signed by the collector of taxes for Jackson county.

By Mr. Kelley—Well, that is objected to by the plaintiff for the reason that it is incompetent and immaterial, and does not show on its face that it was paid by any one interested in this case.

By Mr. Southern—I will have Mr. Owen sworn.

Alma Owen, of lawful age, being produced, sworn and examined on the part of the defendant, testified as follows:

DIRECT EXAMINATION BY MR. SOUTHERN.

Testimony, page 717 and following.

Q. State your full name to the notary.

A. My name is Alma Owen.

Q. Now, Mr. Owen, I will ask you if you had anything to do with this temple lot or property as far back as 1867?

A. No, sir.

Q. How far back did you have anything to do with it, if at all?

A. Well, as far as to my having any business in connection with it I will say that it came into my hands about probably 1878 or 1880, or along about there sometime.

Q. Look at that tax receipt, Mr. Owens (I refer to the tax receipt for the taxes for the year 1866 paid in 1867, heretofore offered in evidence)?

A. Well, what do you want to know about it?

Q. Look at the tax receipt, Mr. Owens, and state if you have ever seen it before.

A. Yes, sir.

Q. Where did you see it?

A. It was in my possession in connection with other papers that were put in my hands.

Q. Who were they put into your hands by?

A. By the church.

Q. Well, who handed them to you?

A. If I ain't much mistaken this receipt, along with a lot of other papers, were given to me and Mr. Hill down at Gardiner by the widow of Granville Hedrick.

Q. They were given to you by the widow of Granville Hedrick?

A. Yes, sir, that is my impression.

Q. When were they given to you by the widow of Granville Hedrick?

A. I can't remember the date. I can't remember what date it was, but it strikes me that it was in 1880, I think. It was in the year '78 or '80, somewhere along about that time.

Q. Well, you think it was about '80?

A. Yes, sir, about that time.

Q. Well, what did you do with it after you got it?

A. I took care of it.

Q. Is it in your possession now?

A. Yes, sir.

Q. I don't think you understand the question. I asked you if it was in your possession now? Of course you have it in your hands now, but what I want to know is who has had possession of it lately, if you know?

A. No, sir, I have not had it lately; they were all turned over to Mr. Hill—it along with some other papers.

Q. Let me understand this; you had possession of these papers at one time, and then you turned them over to some one else?

A. Yes, sir.

Q. Who did you turn them over to?

A. To Mr. Hill.

Q. Who turned them over?

A. I did.

Q. When?

A. I think about the time that I got them. I don't think I ever took these papers home with me.

The tax receipt referred to, and offered in evidence heretofore, being the receipt for the taxes for the year 1866, paid in 1867, is marked "Exhibit 105."

Q. Do you recognize this tax receipt signed by H. H Williams, Collector of Jackson county, Missouri, which is above that. I refer to the tax receipt as it is placed in this book here (referring to the book in which the tax receipts are pasted)?

A. Yes, sir; I think I do.

Q. Where did you first see that, if you recollect?

A. I think that was with the papers that I got, and which I turned over to Mr. Hill.

Q. That was handed to you at that time?

A. Yes, sir.

Q. Along with the other papers?

A. I think so.

Q. Well, I will offer this in evidence, and the signature of H. H. Williams as collector of Jackson county is admitted.

The tax receipt above referred to and identified by the witness is marked "Exhibit 106."

Counsel for the plaintiff objects to the introduction in evidence of "Exhibit 106," on the ground that it is incompetent, irrelevant and immaterial.

Q. I will ask you if you ever saw that tax receipt?

A. Yes, sir.

Q. I now offer a tax receipt for delinquent taxes for lots 16, 20 and 21 in Woodson & Maxwell's Addition to Independence, Missouri, for the year 1870, and the receipt is dated November 10th, 1871, and signed by James L. Gray, collector of taxes for Jackson county, Missouri. Have you ever seen that tax receipt before?

A. Yes, sir; I have seen that.

The tax receipt identified by the witness, and offered in evidence is marked "Exhibit 107."

Q. You have seen that receipt before?

A. Yes, sir.

Q. Where did you see it?

A. It was in with those papers that were put in charge belonging to the church.

Q. What did you do with it?

A. I kept it until—well, now I really don't know that I took that receipt to my house or not. I can't remember as to that, however, it was in my possession for a time. I think that I did not take it to my house. I know that it and the other papers were in the charge or possession of Mrs. Hedrick at the time that we got the papers from Mrs. Hedrick.

Q. And you turned them over, you say, to Mr. Hill?

A. Yes, sir.

By Mr. Kelley—The plaintiff objects to the tax receipt offered in evidence which is marked "Exhibit 107," and to each and every one of the foregoing questions referring to it or any other tax receipt on the ground that they are incompetent, immaterial, and irrelevant, and the introduction of "Exhibit 107" is objected to for the same reason, but the signature of the collector to the tax is admitted.

By Mr. Southern: Q. I now offer in evidence a tax receipt marked "Exhibit 108," signed by James L. Gray, Collector, by his deputy, purporting to be a receipt for the payment of taxes on lots 16, 20 and 21, in Woodson & Maxwell's Addition to the city of Independence?

By Mr. Kelley: That is objected to for the same reasons as were given in the objection to the last receipt offered in evidence.

By Mr. Southern; Q. Did you ever see that tax receipt before?

A. I think so.

Q. If so, where do you see it?

A. It was in connection with those papers that were in our charge.

Q. At the time you have mentioned with reference to the other receipts?

A. Yes, sir.

Q. Did you obtain that receipt at that time?

A. Yes, sir.

Q. From whom?
A. From Mrs. Hedrick.
Q. What did you do with it?
A. It was kept with the rest of the papers until turned over to Mr. Hill.

Q. I now offer a tax receipt for the taxes paid on lots 16, 20 and 21, in Woodson & Maxwell's Addition to the city of Independence, to James L. Gray, Collector, and ask you if you have the same answer to make to that tax receipt, and your knowledge regarding it, that you have made to the other tax receipts I have shown you?
A. Yes, sir.

The tax receipt last above referred to is marked "Exhibit 109."

By Mr. Kelley: That is objected to for the reason that it is incompetent, irrelevant and immaterial, and shows on its face that it was not paid by any one interested in the property in controversy.

By Mr. Southern: Q. I now offer tax receipt for the taxes paid on lots 16, 20 and 21, in Woodson & Maxwell's Addition to the city of Independence, for the year 1873, marked "Exhibit 110," and the same objections and the same admissions are made with reference to this exhibit, it is understood, that were made with reference to the others, and the same testimony from Mr. Owens?
A. Yes, sir.

By Mr. Kelley: Yes, sir, that will do.

By Mr. Southern: Now I want to ask Mr. Hill a question.

Richard Hill, of lawful age, being produced, sworn and examined on the part of the defendants, testified as follows:

[On account of the fact that the examination of Mr. Hill was carried on at the same time as the examination of Mr. Owens was conducted, in so far as the tax receipts hereafter offered in evidence is concerned, it is impossible to separate them, and the examination of the two witnesses above mentioned are included in so far as that branch of their testimony is concerned, in the one list of questions.]

Q. Mr. Hill, have you, or do you know anything about the possession of these tax receipts which have been testified to here by Mr. Owens?
A. Yes, sir, something.
Q. Well, what do you know about them?
A. Well, I know that I had them in my possession for about ten years.
Q. Well, how did you obtain them.
A. From whom did I get them?
Q. Yes, sir.
A. Well, I got them from Mr. Owens.
Q. This applies to all the tax receipts that have been presented heretofore?
A. Yes, sir.
Q. Well, that is all I have to ask you for the present.

ALMA OWENS—DIRECT EXAMINATION RESUMED BY MR. SOUTHERN.

Q. I now offer a tax receipt for taxes paid on lots 16, 20 and 21, in Woodson & Maxwell's Addition to Independence, Missouri,

signed by M. W. Anderson, Collector, dated the 16th day of March, 1875, and the signature of the collector is admitted.

The tax receipt above referred is marked "Exhibit 111."

By Mr. Kelley: That is objected to as incompetent, irrelevant and immaterial, but the signature of the collector is admitted.

By Mr. Southern: Q. Look at that tax receipt and say if you ever saw it before.

A. Yes, sir, I have seen it before.

Q. Where did you see it?

A. Well, I got that tax receipt from the collector myself.

Q. Who paid the money for it?

A. I did.

Q. For whom did you pay it?

A. For the church.

Q. For what church?

A. Well, we call it the Church of Christ, but by some it is called the Hedrickite faction in the Mormon church.

Q. The defendant church in this case?

A. Yes, sir.

Q. You paid these taxes as represented by this tax receipt for the defendant church?

A. Yes, sir.

Q. I now offer in evidence a tax receipt marked "Exhibit 112," being the tax receipt dated December 2d, 1875, signed by William Anderson, collector of taxes for the year 1875, being the taxes for that year on lots 15, 16, 17, 18, 19, 20, 21 and 22, in Woodson & Maxwell's Addition to the city of Independence?

By Mr. Kelley: Well, that is objected to for the same reasons, but the signature of collector is admitted.

By Mr. Southern: Q. Mr. Owens, did you ever see that tax receipt before marked "Exhibit 112"?

A. Yes, sir, I think so.

Q. Where did you see it first?

A. I had it in my possession with those papers.

Q. Do you have the same testimony to give about that as about the others?

A. Yes, sir.

RICHARD HILL.

Q. I would ask Mr. Hill if he ever saw that tax receipt before? I refer to the receipt marked as "Exhibit 112." It is the one that was just testified to by Mr. Owens?

A. Yes, sir.

Q. Where did you see it?

A. Well, sir, I have had that in my possession.

Q. Where did you obtain it?

A. From Mr. Owens, when he turned over the papers to me.

Q. What papers do you refer to?

A. The papers he mentioned as having had in his possession which he turned over to me.

By Mr. Southern—I now offer in evidence a tax receipt marked "Exhibit 113," dated the 22d day of November, 1886, for taxes for

the year 1876, on lots 15, 16, 17, 18, 19, 20, 21 and 22, in Woodson & Maxwell's Addition to the city of Independence. Is the signature to this receipt admitted?

By Mr. Traber—Yes, sir, the signature to them is admitted right along to every one of them.

ALMA OWEN.

By Mr. Southern—Mr. Owen did you ever have——

By Mr. Kelley—Hold on until we object to that last tax receipt marked "Exhibit 113." We make the same objection as heretofore, because the tax receipt shows that it was paid, if paid at all, by a party not interested in this proceeding.

By Mr. Southern: Q.—Mr. Owen, what testimony do you give in reference to the tax receipt marked "Exhibit 113"?

Counsel for plaintiff objects to the question asked the witness for the reason that it is incompetent, irrelevant and immaterial, and not proper direct examination.

Q. Do you give the same testimony in respect to that that you do in regard to the other proceedings?

A. Yes, sir.

RICHARD HILL.

By Mr. Southern: Q.—Mr. Hill, what do you say to that?

A. Well, I understand all about that, that is, I had it in my possession, and I got it in the same way that I did the other papers that I have spoken about.

ALMA OWEN.

By Mr. Southern: Q—I now offer a tax receipt dated the 21st day of December, 1877, marked "Exhibit 114," for the taxes for the year 1877, on lots numbered from 15 to 22, in Woodson & Maxwell's Addition to the city of Independence, Missouri, signed Daniel Murphy, Collector.

By Mr. Kelley—The signature is admitted, but the receipt is objected to on the ground that it incompetent, irrelevant and immaterial.

By Mr. Southern: Q.—Mr. Owens, I will ask you if that is one of the signatures that you recognize?

A. Yes, sir, one of the signatures, it is one of the receipts that I had in my possession.

Q. Well, that is what I meant to say?

A. Yes, sir, I had that in my possession.

Q. Where did you obtain it?

A. It was with those papers, I think, that I got from Mrs. Hedrick.

By Mr. Southern—I now offer a tax receipt dated the 12th day of January, 1880, marked "Exhibit 115," on the same property above described.

By Mr. Kelley—Mr. Reporter, note the same objection and the same admission as to the signature of collector.

By Mr. Southern: Q.—You have seen that tax receipt, Mr. Owens?

A. This one here?

Q. Yes, sir. State if you ever saw that before.
A. Yes, sir.
Q. Where did you obtain it, if you ever had it in your possession?
A. I am not right sure that I did not pay that myself. I think I paid that myself, but I am not right sure about it.
Q. Look at it and see if you paid it yourself.
A. Well, I can't be positive about that, sir.
Q. What is that?
A. I can't be positive about that.
Q. You can't be positive as to what?
A. As to whether I paid it myself, or as to whether it was with those papers that I got from Mrs. Hedrick. I can't be right positive as to which it was at this time, but it seems to me that I paid that myself.
Q. But you are not positive as that?
A. No, sir.

By Mr. Southern: I now offer a receipt dated the 12th day of January, 1880, marked "Exhibit 116," signed by Daniel Murphy, collector of taxes for Jackson county, Missouri, on the property above described, and I suppose it can go in with the same objection as to competency, relevancy and materiality as the others did, and with the admission as to the signature of collector.

By Mr. Kelley: Yes, sir, that is understood.

By Mr. Southern: Q. Do you recognize that, Mr. Owens?
A. Yes, sir.
Q. Well, what do you know about it?
A. Well, I have looked these receipts all over, so far as they had been paid before I took charge of the business and went to paying them myself, and I generally ordered the receipts, when I paid the taxes to be so marked as to show that I had paid it myself. Now, I don't say that I always did this, or that I did it up to a certain time; but I did with some of them I know, and it was my intention to nave all the receipts for taxes that I paid show the fact that I had paid them. I don't [deny] that they will all show that they [were] paid by me personally in my own individual capacity, or whether they were paid by me as trustee for the church.

By Mr. Southern: Now I offer a tax receipt dated the 8th day of May, 1883, marked "Exhibit 117," on lots 17, 18, 19 and 22, in Woodson & Maxwell's Addition to Independence, Missouri, signed by R. G. Wilson, Jr., collector, by Frank C. Wyatt, deputy, and I suppose this is admitted subject to your objections as hereinbefore stated, but the signature of collector is admitted?

By Mr. Kelley: Yes, sir, that entry may go to the admission of all these tax receipts with the admission you stated.

RICHARD HILL.

By Mr. Southern: Q. Mr. Hill do you know who paid that receipt marked "Exhibit 117?"
A. Yes, sir.
Q. Do you know who paid it, is that what you said?
A. Yes, sir, it seems as though I should know.

Q. Who paid it?
A. I did.

Counsel for the plaintiff objects to the question asked the witness on the grounds and for the reasons that it does not call for the best evidence.

Q. For what purpose did you pay it?
A. For what purpose; I don't understand that.
Q. In other words, for whom did you pay it; did you pay it on your own behalf, or did you pay it for some one else?
A. I paid it for the church of course.
Q. What church?
A. The Church of Christ.
Q. Is that the defendant church in this action?
A. Yes, sir.

By Mr. Southern: I now offer a tax receipt dated the 22d day of March, 1880, signed by Daniel Murphy, and marked as "Exhibit 118."

Q. Mr. Hill will you please look at that receipt and state if you recognize it?
A. Yes, sir.
Q. What do you know about it?
A. Well, I know it is the same as the others I had in my possession.
Q. Did you pay that?
A. No, sir.
Q. Do you know who paid it?
A. No, sir; I did not see it paid, and I only know by the name on the receipt.
Q. You only know from the name on the receipt?
A. Yes, sir, that is all I know about it of my own knowledge, and I suppose that is what you want?

By Mr. Kelley: Note our same objection as to the admission on that receipt, and the same admission as to the signature.

By Mr. Southern: Now I offer a receipt dated the 17th day of December, 1880, signed by Daniel Murphy, collector for Jackson county, marked "Exhibit 119," on the lots numbered from 15 to 22, in Woodson & Maxwell's Addition to the city of Independence, with the same admission as to the signature of collector, and the same objection as to its admissibility.

ALMA OWENS.

By Mr. Southern: Q. Mr. Owens will you please look at that receipt and see if you know who paid it?
A. Yes, sir, I know who paid that.
Q. Well, who paid it?
A. I did.
Q. That is one of the receipt for taxes that you paid yourself, personally?
A. It is.
Q. For what purpose, or upon whose behalf did you pay it?
A. I paid it for the church, as the agent of the church; I paid it on behalf of the church.

Q. You paid it for the same church that you have testified to here before?

A. Yes, sir, the Church of Christ.

Q. One of the defendants in this action?

A. Yes, sir.

By Mr. Southern: Now I offer in evidence a receipt dated the 7th day of December, 1880, for the taxes for the year 1880, on lots numbered from 15 to 22 inclusive, signed by John M. Swearingen, collector, and it is admitted that the signature is the signature of the collector, and the plaintiff's objection as hereinbefore noted runs to this offer as well as all the others.

RICHARD HILL.

By Mr. Southern: Q. Mr. Hill, do you know who paid that tax receipt marked "Exhibit 120?"

A. Yes, sir.

Q. Well, who paid it?

A. Well, I paid that tax myself, and got that receipt.

Q. And you paid it on behalf of the defendant church?

A. Yes, sir.

ALMA OWEN.

By Mr. Southern: Q. Mr. Owen, will you look at that receipt Marked "Exhibit 121," and state what you know about it?

A. Yes, sir, I have seen it before.

Q. Who paid that?

A. I did.

Q. For what purpose?

A. For the church.

Q. Well, I offer it in evidence.

By Mr. Kelley: Consider it in with the same admissions and the same objections.

By Mr. Southern: You say you paid that for the church as its agent?

A. Yes, sir; agent or trustee.

By Mr. Southern: I will now offer a tax receipt dated the 24th of December, 1881, signed by Red Silvers as collector, on the same property, which said tax receipt offered in evidence is marked "Exhibit 122," and is for the taxes for the year 1881. It is offered subject to the plaintiff's objection as hereinbefore noted, and the signature of collector is admitted.

Q. Mr. Owen, look at that receipt and state if you ever saw it before?

A. I did.

Q. If you know who paid it, you may state the fact?

A. Yes, sir, I know who paid it; I paid it myself.

Q. For what purpose did you pay it?

A. For the church.

Q. For what church?

A. For the Church of Christ.

Q. For the defendant church in this action?

A. Yes, sir.

By Mr. Southern: I offer a tax receipt dated the 21st day of December, 1882, marked "Exhibit 123," signed by R. G. Wilson, Jr., collector, marked in duplicate for the same property, that is to say, lots numbered from 15 to 22 inclusive, in Woodson & Maxwell's Addition to the city of Independence, Missouri, and this receipt is offered subject to the objection of plaintiffs as to its relevancy, competency and materiality, with the admission that the signature attached is the signature of the collector of Jackson county, as it purports to be.

Q. Now, Mr. Owen, who paid that?
A. I did.
Q. Did you say you paid it?
A. I did; yes, sir, it was paid by me.
Q. For what purpose?
A. For the same purpose as I have before stated.
Q. You paid on behalf of the defendant church?
A. Yes, sir.

By Mr. Southern: I offer now a tax receipt, or rather a receipt for taxes, dated the 15th day of December, 1883, signed by R. G. Wilson, Jr., as collector of taxes, covering the same property.

The tax receipt above offered in evidence is marked "Exhibit 124."

The tax receipt above offered in evidence is objected to by the plaintiff on the ground that it is incompetent, irrelevant and immaterial, but it is admitted that the signature is the signature of the collector of taxes for Jackson county, Missouri, as it purports to be.

Q. Mr. Owens, will you please look at that receipt and state if you know who paid it?
A. I paid it.
Q. For what purpose did you pay it?
A. For the same purpose.
Q. For the church?
A. Yes, sir, for the church.
Q. For the defendant church?
A. Yes, sir, for the same church that I have already stated.

By Mr. Southern: I now offer a tax receipt signed by Benjamin Holmes as collector, dated the 15th day of December, 1883, on lots 15 to 22 inclusive, in Woodson & Maxwell's Addition to the city of Independence, which is marked "Exhibit 125," and it is agreed that the signature of Benjamin Holmes thereto attached is his genuine signature; said receipt being offered subject to plaintiff's objection as hereinbefore set forth.

Q. Mr. Owens will you please look at that receipt and state, if you know, who paid it?
A. Yes, sir, that is another one that I paid.
Q. You may state for what purpose you paid it.
A. Yes, sir, for the same purpose.
Q. Well, state what the purpose was.
A. For the church.
Q. For the defendant church in this case?

A. Yes, sir.

By Mr. Southern: I now offer in evidence tax receipt marked "Exhibit 126," dated the 6th day of December, 1884, signed by Benjamin Holmes, collector, subject to plaintiff's objection, with the admission as to signature; also tax receipt marked "Exhibit 127," dated the 11th day of December, 1884, signed by Benjamin Holmes as collector; also one dated the 19th day of December, 1885, signed by R. G. Wilson, Jr., as collector, marked "Exhibit 128;" also one dated the 30th day of December, 1886, marked "Exhibit 129," all for the same property, and one dated the 30th day of December, 1886, marked "Exhibit 130," for the same property. All of these are offered with the signatures of the collector thereto signed, which I understand is admitted, and subject to the objection of the plaintiff: I also offer a tax receipt dated the 14th day of November, 1887, marked "Exhibit 131;" also one dated the 8th day of November, 1888, for the same property, marked "Exhibit 132."

By Mr. Kelley: Each and everyone of the tax receipts offered in evidence on behalf of the defendant is objected to for the reason that they are incompetent, irrelevant and immaterial, but the signatures are admitted.

By Mr. Southern: Q. Now Mr. Owens look at the receipt marked "Exhibit 126," and say if you know that?

A. Yes, sir.

Q. You recognize it?

A. I do.

Q. Now look at the one marked "Exhibit 127," and state what you know about that?

A. Yes, sir, I know that also.

Q. Do you also know the one marked "Exhibit 128?"

A. Yes, sir.

Q. How is it with reference to the one marked "Exhibit 129?" Do you know that also?

A. I do.

Q. Do you also know the one marked 130?

A. Yes, sir.

Q. And the one marked 131, do you know that?

A. Yes, sir.

Q. And the one marked "Exhibit 132," do you know that?

A. I do.

Q. You recognize all of these receipts?

A. Yes, sir.

Q. Who paid them?

A. I did.

Q. For what purpose?

A. For the church.

Q. You paid them yourself?

A. I did.

Q. And you paid them for the church you say, and by that you mean the church which is the defendant, or one of the defendants in this suit?

A. Yes, sir. When I say the church I mean the Church of

Christ, which is one of the defendants in this suit as I understand it.

Well, sir, I guess I am through with you. Wait, though, until these gentlemen have an opportunity to cross-examine you if they see fit. In the meantime I will proceed with Mr. Hill.

RICHARD HILL.

By Mr. Southern: Q. I now offer a receipt signed by Frank Wyatt, collector of taxes, dated the 14th day of November, 1887, marked "Exhibit 133;" also the tax receipt marked "Exhibit 134," signed as above, also "Exhibit 136," there being no date of payment on it, but it is for the taxes for 1889, signed John W. Davis, city collector; also the one marked "Exhibit 137," on lots 15 and 16, in Woodson & Maxwell's Addition, signed Frank C. Wyatt, collector, dated the 30th December, 1890; also the receipt marked "Exhibit 138," signed Walter Rider, city collector, dated the 31st of December, 1890, on lots 15 and 16, Woodson & Maxwell's Addition, marked "Number 139;" also a tax receipt dated December 18th, 1891, signed E. W. Hayes, collector, on lots 16 and 16 Woodson & Maxwell's Addition, marked "Exhibit 140;" also a tax receipt dated the 18th day of December, 1871, on lots 15 to 22 inclusive, in Woodson & Maxwell's Addition, marked "Number 141;" also a tax receipt marked "Exhibit 142," dated the 18th day of December, 1891, signed E. W. Hayes, collector, on lots 16 17, 19, 20, 21, and 22, Woodson & Maxwell's Addition. Now, then, Mr. Hill, I will ask you whether or not these tax receipts were all paid by you?

Counsel for the plaintiff objects to the tax receipts offered in evidence on the ground that they are irrelevant, incompetent and immaterial, and to the question asked the witness on the grounds above stated, and because it is leading.

A. Yes, sir.
Q. They were paid by you?
A. Yes, sir.
Q. For what purpose?
A. For the church.
Q. For what church?
A. The Church of Christ.
Q. The church that is one of the defendants in this case?
A. Yes, sir.
Q. That is the church which you, as trustee, represent?
A. Yes, sir.

By Mr. Kelley: We object to all these receipts, to each and every one offered in evidence, for the reasons above given, but the signatures are of course admitted.

ALMA OWEN.

Direct examination continued by Mr. Southern: Q. Mr. Owen, in what capacity did you give attention to the lots of ground in controversy in this case, and about which you have been testifying as having paid a part of the taxes thereon?

A. I was made the clerk for the church, and the agent for the church.

Q. You were made agent for it?

A. Yes, sir.
Q. That is for the church?
A. Yes, sir.
Q. Did you give any other attention to the affairs of the church other than the payment of the taxes as evidenced by these tax receipts which you testified you paid?
A. Yes, sir.
Q. Well, what was it?
A. Well, I was one of the committee that had charge of the improving of these lots, of this Temple property, and of taking care of it.
Q. Well, what did you do with the Temple lot with reference to taking care of it, or improving it, if anything?
A. Well, I assisted some in engineering it, that is I assisted some, and was there at the time that Mr. Hickman gave us the boundary, and I gave it my time and attention, and assisted in planting out some trees on it, and fencing it.
Q. Fencing it, you say?
A. Yes, sir, I assisted in fencing it and looking after it generally.
Q. What is your recollection with reference to the time that was done?
A. With reference to the time that it was fenced?
Q. Yes, sir.
A. Well, I don't know that I can state it positively, but I might if I had access to some receipts that were given, or something of that kind.
Q. Will you please look at that paper and see if that refreshes your memory any?
By Mr. Kelley: Well, we object to the witness refreshing his recollection from anything in the shape of a memorandum, unless it appears that the memorandum was made by himself.
A. Well, this you might say was made by myself, for I paid the money myself that is represented by this.
By Mr. Southern: Q. Who is that from?
A. It is for money paid to Mr. H. P. Hale.
Q. Do you recognize that?
A. Yes, sir.
Q. What is it?
A. It is a receipt.
Q. A receipt for what purpose?
A. It is for money paid to Mr. Williams for work done.
Q. Work done where?
A. For work done on the Temple lot.
Q. Well, now, after reading that receipt you may state, if you know, anything about when that work was done?
A. Well, this is so written that I can't really make it out. It seems to be '82, don't it? I really can't tell what that date is, but it seems to be 1882 or '82.
Q. Can't you make out the date?
A. I cannot.
Q. Do you know whose signature that is to that paper?

A. H. P. Hale's.

Q. Well, do you know that is his signature?

A. I only know it from the fact that I paid him the money, and he handed me the receipt. I cannot say that I saw him write that receipt.

Q. That is the way you know it?

A. Yes, sir.

Q. You handed him the money and in return he gave you that receipt?

A. Yes, sir.

Q. And he handed it to you with that name to it?

A. Yes, sir.

By Mr. Southern—Well, I will offer that receipt in evidence for what it is worth.

The receipt above referred to, identified by the witness, is hereupon marked "Exhibit 143,"

Counsel for the plaintiff objects to the receipt marked "Exhibit 143" being offered or received in evidence, on the ground that it is incompetent, irrelevant and immaterial, and there is no proof that the money which it purports to be a receipt for was expended on the Temple lot or the land in controversy.

Q. Did you ever see the paper I now hand you?"

A. Yes, sir.

Q. What is that?

A. That is the receipt of G. M. Nichols for the wire that is around the Temple lot. That is the receipt for the wire that was around the Temple lot I think. Yes, sir, that is what it is. It is for the wire, locks, hinges and other things and material that they furnished in fencing of the Temple lot.

Q. What signature is that—is affixed to that?

A. G. M. Nichols.

By Mr. Southern—Well, we will also offer that in evidence.

The receipt identified by the witness as above described, is marked "Exhibit 144."

Q. What date is affixed to it?

Counsel for the plaintiff objects to the question asked the witness on the ground that it does not call for the best evidence, the paper itself being the best evidence.

Q. Does that indicate to you anything with reference to the date of the transaction we are referring to here?

A. Yes, sir.

Q. Well, what does it indicate to you?

A. September 20th, 1882. That is the date.

Q. Well, what does it indicate?

A. Well, it indicates that that was about the date that I paid this money to him. That is what it indicates to me. I suppose that is the exact date that I paid that money to him; I don't know anything to the contrary, and it would not be likely that it would be any other day.

Q. I will offer that in evidence also.

Counsel for the plaintiff objects to the offer of evidence or proof on the ground that it is incompetent, irrelevant and immaterial.

Q. Now that you have your mind refreshed by these receipts can you state about what time you had that work done?

A. On the Temple lot?

Q. Yes, sir.

A. Well, it was during the summer of 1882.

Q. Describe the work that you had done.

Counsel for plaintiff objects to the question asked the witness on the ground and for the reason that it is immaterial.

A. The work was fencing the lot with posts and wire, and planting out some trees on it.

Q. Upon what ground was that done?

A. Upon what was known as the Temple lot or ground. It was the same ground that has been so often described here.

Q. You refer to the lots or ground in controversy here?

A. Yes, sir.

Q. For whom did you do that work and pay out that money?

A. For the church as I have before mentioned.

Q. For the defendant church in this case?

A. Yes, sir.

Q. Where did you get that money?

A. From the church. Well, there was a fund in my hand at that time belonging to the church, I think.

Q. Where did that money come from?

A. Well, it came from different sources, I think—mainly from contributions from members. It was contributed at different times, and in different amounts at various times to defray the expenses of the church.

Q. Where did the money come from with which you paid these tax receipts, usually or generally?

A. Well, from contributions usually. At that time there was a fund in my hands that came from William Eaton that belonged to the church, and it was turned over to me as the agent of the church to pay these expenses with.

Q. What was the amount of that fund, and how was it expended?

A. Well, now I don't remember just exactly the amount, or how it was all applied, but it was applied in building sidewalks and fencing and otherwise improving the lot there, together with other money that was put into my hands for that purpose.

Q. The money that you used for paying the taxes, what money was that?

A. It was the same money, the money that was appropriated for paying the taxes was the same fund that was used for these other expenses. It was all used for paying the current general expenses of the church whatever they were, and this was one of the items of expenses that was to be paid out of the fund. I think, perhaps, that some of the first tax receipts that I paid were paid with my own money, but the church accounted to me for it afterwards.

Q. You paid at first some of your own money, for the church afterwards accounted to you?

A. Yes, sir; that I think was at the first. I just paid out my

own money, and took receipts for it, and then when I would render my account to the church they would recompense me for it.

Q. You mean they would repay you?

A. Yes, sir; that is what I mean.

Q. Was any of this money paid in the interest of, or for the benefit of any other church association other than that which made these improvements around these lots?

Counsel for the plaintiff objects to the question asked the witness on the ground that it is incompetent and immaterial.

A. Not by me or with my consent.

Q. Well, then, was it or was it not paid in the interest of the Church of Christ at Independence, Missouri.

Counsel for the plaintiff objects to the question asked the witness on the ground that it is incompetent, irrelevant and immaterial and leading.

A. Yes, sir.

Mr. Southern—That is all.

Cross-Examination of Mr. Owen on pages 46, 47, 48, 49, 50, 51.

TAX RECEIPTS FOR LOTS IN CONTROVERSY.

EXHIBIT 106.—Paid Oct. 9, 1867, by J. C. Irwin, am't $11.15, on lots Nos. 2, 3, 17, 18, 19 and 22, for 1866.

EXHIBIT 106.—Paid Sept. 19, 1865, by J. C. Irwin; am't ——— on lots Nos. 17, 18, 10 and 22, for 1862, '63, '64 and '65.

EXHIBIT 107.—Paid Nov. 10, 1871, by W. Eaton, am't $15.01, on lots 16, 20 and 21, for 1870.

EXHIBIT 108.—Paid Nov. 10, 1871, by W. Eaton; am't $13.85, on lots 16, 20 and 22, for 1871.

EXHIBIT 109.—Paid Dec. 2, 1872, by W. Eaton, trustee, am't $27.12, on lots 16, 20 and 22, for 1872.

EXHIBIT 110.—Paid Dec. 3, 1873, by W. Eaton; am't $7.98, on lots 16, 20 and 22, for 1873.

EXHIBIT 111.—Paid March 16, 1875, by A. Owen; am't $8.25, on lots 16, 20 and 21, for 1874.

EXHIBIT 112.—Paid Dec. 2, 1875, by W. Eaton; am't $9.03, on lots 15, 16, 17, 18, 19, 20, 21 and 22, for 1875.

EXHIBIT 113.—Paid Nov. 22, 1876, by W. Eaton; am't $5.91, on lots 15, 16, 17, 18, 19, 20, 21 and 22, for 1876.

EXHIBIT 114.—Paid Dec. 21, 1877, by G. Hedrick, trustee; am't $5.00, on lots 15 to 22 inclusive, for 1877.

EXHIBIT 115.—Paid Jan. 12, 1880, by G. Hedrick, trustee; am't $5.90, on lots 15 to 22 inclusive, for 1878.

EXHIBIT 116.—Paid Jan. 12, 1880, by G. Hedrick, trustee, by A. C. Haldeman; am't $5.20, on lots 15 to 22 inclusive, for 1879.

EXHIBIT 117.—Paid May 8, 1883, by R. Hill; am't $10.14, on lots 17, 18, 19 and 22, for 1873, and 15 to 22, for 1879.

EXHIBIT 118.—Paid March 22, 1880, by W. Eaton; am't $83.79, on lots 17, 18, 19 and 22, for 1867, '69, '71, '72, '73.

EXHIBIT 119.—Paid Dec. 17, 1880, by A. Owen, for trustee; am't $6.00, on lots 15 to 22 inclusive, for 1880.

EXHIBIT 120.—Paid Dec. 7, 1880, by R. Hill, agent for G. Hedrick; am't $7.70, on lots 15 to 22 inclusive, for 1880.

EXHIBIT 121.—Paid Dec. 31, 1881, by A. Owen; am't $9.20, on lots 15 to 22 inclusive, for 1881.

EXHIBIT 122.—Paid Dec. 24, 1881, by A. Owen, trustee for G. Hedrick; am't $5.50, on lots 15 to 22, for 1881, city taxes.

EXHIBIT 123.—Paid Dec. 21, 1882, by A. Owen; am't $17.63, on lots 15 to 22, for 1882.

EXHIBIT 124.—Paid Dec. 15, 1883, by A. Owen, agent; am't $16.13, on lots 15 to 22, for 1883.

EXHIBIT 125.—Paid Dec. 15, 1883, by A. Owen; am't $5.25, on lots 15 to 22, for 1883, city taxes.

EXHIBIT 126.—Paid Dec. 6, 1884, by A. Owen, trustee; am't $23.50, on lots 15 to 22, for 1884.

EXHIBIT 127.—Paid Dec. 11, 1884 by A. Owen, trustee; am't $6.00, on lots 15 to 22, for 1884, city taxes.

EXHIBIT 128.—Paid Dec. 1885, by A. Owen, trustee; am't $14.00, on lots 15 to 22, for 1885.

EXHIBIT 129.—Paid Dec. 30, 1886, by A. Owen, trustee; am't $23.50, on lots 15 to 22, for 1885.

EXHIBIT 130.—Paid Dec. 30, 1886, by A. Owen, trustee; am't $6.00, on lots 15 to 22, for 1886, city taxes.

EXHIBIT 131.—Paid March 14, 1887, by A. Owen, trustee; am't $8.50, on lots 15 to 22, for 1887.

EXHIBIT 132.—Paid Nov. 8, 1888, by A. Owen, per R. Hill; am't $12.75, on lots 15 to 22, for 1888, city taxes.

EXHIBIT 133.—Paid Nov. 14, 1887, by R. Hill, trustee; am't $18.00, on lots 15 to 22, for 1887.

EXHIBIT 134.—Paid Dec. 5, 1888, by R. Hill, trustee; am't $10.80, on lots 15 to 22, for 1888.

EXHIBIT 135.—Paid Dec. 3, 1889, by R. Hill, trustee; am't $35.69, on lots 15 to 22, for 1889.

EXHIBIT 136.—Paid —— —— by R. Hill; am't $12.75, on lots 15 to 22, for 1889, city taxes.

EXHIBIT 137.—Paid Dec. 30, 1890, by R. Hill; am't $9.31, on lots 15 and 16, for 1890.

EXHIBIT 138.—Paid Dec. 31, 1890, by R. Hill, trustee; am't $4.20, on lots 15 and 16, for 1890, city taxes.

EXHIBIT 139.—Paid Dec. 18, 1891, by R. Hill, trustee; am't $12.90, on lots 15 to 22, for 1890.

EXHIBIT 140.—Paid Dec. 18, 1891, by R. Hill, trustee, for Church of Christ; am't $8.26, on lots 15 and 18, for 1891.

EXHIBIT 141.—Paid Dec. 18, 1891, by R. Hill; am't $15.47, on lots 15 to 22, for 1891, city taxes.

EXHIBIT 142.—Paid Dec. 18, 1891, by R. Hill, on lots 15 to 22 inclusive, for 1891.

EXHIBIT 146.—Power of Attorney from Samuel H. Woodson and wife to Wm. Chrisman to sell land in tract from Flournoy to Partridge shown in "Exhibit A S O," 55 acres off east half of southwest quarter of section 3, township 49, range 32, Jackson county, Missouri, and other land, dated 20th day of November, 1858; recorded 30th day of December, 1858, in recorder's office at Independence, Missouri.

EXHIBIT 147.—Trust deed from Samuel H. Woodson to Abram

Comingo, benefit of Stone, McCoy & Co., in trust tract of land on which said Woodson resides, in 73 acre tract from Flournoy to Partridge, executed 18th day of July, 1861, and recorded 27th day of Nov., 1861, in recorder's office at Independence, Missouri, in Book 30, at page 200.

EXHIBIT 145.—Deed, A. Comingo, trustee, to Wm. Chrisman, land on which Samuel H. Woodson resided, described in deed of trust dated 18th day of July, 1861, recorded in Book 30, at page 200, recorder's office, Independence, Missouri, in the tract from Flournoy to Partridge, show in "Exhibit A S O." This deed recorded in Book 43, at page 728, in recorder's office at Independence, Missouri.

EXHIBIT 149.

WM. CHRISMAN and LUCIE A., his wife, TO ST. JOHN & DAWSON. } Recorded 15th day of May, 1866, in the recorder's office, Independence, Missouri.

Conveys a part of the southeast quarter of section three (3), township forty-nine (49), range thirty-two (32), bounded as follows: Beginning at a point where the south line of Walnut street, in the city of Independence, intersects the east line of the Pacific Railroad avenue, running thence east variation 8½ degrees four hundred and eighty-six feet to the center of Temple street, thence south 72 24-100 rods, thence west 7 degrees north 26 8-100 rods, thence north 21½ degrees east 8 68-100 rods, thence west 21½ degrees north 6 8-100 rods, thence north along the east line of Pacific Railroad avenue 61 16-100 rods to beginning, containing in all 12 acres, 3 rods, 32 perches and 19 yards.

Acknowledged May 8th, 1866, in due form.

WM. CHRISMAN and LUCIE A., his wife, TO JOHN P. ST. JOHN. } Dated May 8, 1866; filed and recorded May 15, 1866, in recorder's office, Independence, Missouri.

Conveys a part of the southeast quarter of section three (3), township forty-nine (49), range thirty-two (32), described by meets and bounds as follows, to-wit: Commencing at a point where the south line of Walnut street, in the city of Independence, intersects with the west line of the Pacific Railroad avenue, running thence west 10 32-100 rods, thence south 30 degrees west 30 88-100 rods, thence south 21 degrees west 36 rods, thence east 21½ degrees south 23 64-100 rods, thence north 21½ degrees east 15 28 100 rods, thence east 21½ degrees south 13 48-100 rods, thence 50 24-100 rods to the beginning, containing in all 9 acres, 2 rods and 22 perches.

Acknowledged May 10th, 1866.

EXHIBIT M. S.

DESCRIPTION OF ST. JOHN & DAWSON'S ADDITION TO CITY OF INDEPENDENCE.

Filed and recorded May 10, 1866, in recorder's office, Independence, Mo.

Beginning at the intersection of the south line of Walnut street with the east line of Pacific Railroad avenue, thence east 7 36-100 chains or 2,944 rods to center of Temple street, thence south 18 6-100 chains or 9,224 rods, thence west 70 degrees north 6 52-100 chains or 2,608 rods, thence north 21 degrees 30 minutes east 2 27-100 chains or 868 rods, thence west 21 degrees 30 minutes north 1 52-100 chains or 608 rods and thence north 15 99 100 chains or 6,116 rods to the place of beginning.

Acknowledged in usual form, St. John's Addition filed and recorded same date as above.

EXHIBIT 148.

THOMAS H. SWOPE, a single man, TO JOSEPH LUFF. } Warranty deed, dated January 23, 1889.

Conveys all of that portion of lot twenty-three (23), in Woodson & Maxwell's Addition to the city of Independence, lying east of Grand Avenue street.

Acknowledged January 23, 1889.

Josiah W. Swearingen, of lawful age, being produced, sworn, and examined on the part of the defendants, testified as follows:

I am deputy clerk of the county court, have been deputy clerk of the county court twenty-seven years with the exception of about six years. I am acquainted with the records of the county court. The tax books of the county are deposited in our office, the assessor's books or the collector's books, I mean the collector's books. There are no tax books of this county on file prior to the year 1860.

"Defendants offer a copy of the tax records of Jackson county, Missouri, with reference to the land in controversy, for the years from 1860 up to the present time, marked "Exhibit 160."

Plaintiff objects to the introduction of the tax records for the reason that the same are immaterial, irrelevant and incompetent, and not proper evidence, and no evidence at all upon matter in controversy in this case.

"Exhibit 160" is too cumbersome to copy. It is offered to show that the lots in controversy were uniformly assessed, and that they corroborate the tax receipts offered in evidence.

On page 810 testimony:

Mr. Southern offered a copy of the tax records of Jackson county, Missouri, with reference to all the entries with respect to taxes on the land in question in this suit for all the years from the year 1860 to the present time, which is certified as required by law, and asked that the same be marked "Exhibit 160."

On page 812 of the testimony is to be found the following:

Omitted from Plaintiff's abstract by Mr. Southern: Now I offer all the tax receipts heretofore offered in evidence by the defendants, numbered from Exhibit 105 to Exhibit 142 inclusive. In the numbers given to the tax receipts above offered I wish to include each and every tax receipt offered in evidence whatever its number may be.

Objected to by plaintiffs.

ADMISSIONS.

By Mr. Southern—It is admitted by both parties hereto that the certificates of the recorder endorsed on the respective original deeds introduced in testimony in this case shall be taken as the date of the recording of the said deeds as certified on said deeds by the recorder.

By Mr. Traber—It is admitted that the area of the property in question in this suit, is correctly shown, as designated and shown by "Exhibit A. S. O," and that the total area of the same may be calculated from the dimensions there given.

By Mr. Southern—It is also admitted that the plaintiffs hold the title to the property on which the stone church, in the city of Independence, Missouri, is located, for the local church of plaintiffs at Independence, and that it has a seating capacity of one thousand persons.

By Mr. Southern—It is further agreed that the cost of all copies of deeds received in evidence shall be taxed at the sum of one dollar each.

IDENTIFICATION AND RECORD HISTORY, &c.

P. H. Grinter, of lawful age, being produced, sworn and examined on the part of the defendants, testified as follows:

DIRECT EXAMINATION.

By Mr. Southern: Q.—What is your full name?
A. P. H. Grinter.
Q. Mr. Grinter, you may state what your business is.
A. I am a civil engineer and land surveyor.
Q. Did you ever transact any business here in Independence?
A. I have.
Q. As a land surveyor?
A. Yes, sir.
Q. And as a civil engineer?
A. Yes, sir.
Q. In what capacity have you acted?
A. I was city engineer here for several years.
Q. As such were you acquainted with, or are you acquainted with the boundaries of the city of Independence, and the boundaries of its additions?
A. I am.
Q. Will you please look at the plat here before you, marked "Exhibit A S O," and state what it is?
Counsel for the plaintiff objects to the question asked the witness on the ground that it is incompetent and immaterial.
Q. You may answer the question.
A. This is a plat representing certain lands within the city of Independence.
Q. Is there anything on that plat purporting to represent sixty-three acres of land purported to be conveyed by one Flournoy to one Partridge?
A. By whom?
Q. By one Jones H. Flourney to one Edward Partridge?
Counsel for the plaintiff objects to the question asked the witness on the ground that it is incompetent, irrelevant and immaterial and leading.
Q. You may go on and answer the question.
A. Please let me examine the abstract.
Q. Here it is; examine that if you desire, and then make your answer.
A. What is the question?
Q. I asked you if there was anything on that plat that purported to represent sixty-three acres of land that was conveyed by one Jones H. Flournoy to one Edward Partridge at any time?
A. There is.
Q. Please designate it to the reporter.
A. Here is the land designated on the plat.
Q. That is it there?
A. Yes, sir.
Q. Well, that is hardly definite enough. Please describe the lines on the plat by which the land is bounded?

A. This entire piece here bounded by the lines marked in blue on the map is the property you refer to.

Q. The land on the plat bounded by the lines marked in blue ink?

A. Yes, sir.

Q. Now, is there any boundary designated on that plat commencing on the south line of the southwest quarter-section of section three, township number forty-nine, of range number thirty-two, forty poles from the southeast corner of said quarter-section, thence north sixteen poles and ten links, thence north forty degrees east ten poles, thence north twent-one degrees east fourteen poles, thence north fifteen degrees east twenty poles, thence north forty-two degrees east thirty-four poles, thence north fifty-five degrees east thirty poles, thence north sixty-four degrees east forty poles, thence north seventy degrees east seventeen poles and fifteen links?

A. Yes, sir; I find the land represented as you have described.

Q. Well, what ground is that?

Counsel for the plaintiff objects to the question asked the witness on the ground that it is irrelevant and immaterial, and is leading.

A. I told you that that is the land laid down on this plat here, bounded by the blue lines in ink as heretofore described.

Q. I want to add to my description there these words, "thence due south one hundred and twenty-two poles and seventeen links to the place of beginning, containing sixty-three acres and forty-three one hundred and sixtieths of an acre?

A. Yes, sir, that is correct; that is this land described.

Q. Well, that is the land bounded by what lines on this map?

A. It is the land bounded by the blue lines as represented on this map.

Q. Do you know where St. John & Dawson's Addition to this city is located?

A. I do.

Q. St. John & Dawson's Addition to the city of Independence?

A. Yes, sir, I know its location.

Q. Is there anything on this map corresponding to it?

A. There is; it is indicated here.

Counsel for plaintiff objects to the question asked the witness and the manner of his examination, for the reason that it is leading.

Q. What, if anything, is there on this map that corresponds with St. John & Dawson's Addition to the city of Independence?

A. The part of this map that is colored yellow represents St. John & Dawson's Addition to the city of Independence.

Q. Is it within the sixty-three acres you have heretofore described?

A. Yes, sir.

Counsel for plaintiff objects to the question for the reasons above set forth.

A. It is.

Q. Do you find any other additions inside of this sixty-three acre tract bounded by the blue lines?

A. I do.

Q. If so, what are they?

Counsel for the plaintiff objects to the question asked the witness on the ground that it is incompetent, irrelevant and immaterial, and is leading.

Q. What is it, if any?

A. Woodson & Maxwell's Addition.

Q. Well, what others do you find, if any?

Counsel for the plaintiff objects to the question asked the witness for the same reasons and on the grounds above set forth.

Q. You may answer the question.

Q. I find with St. John & Dawson's Addition "Prospect Place," St. John's Addition and Torpey & Serviss's Addition.

Q. Well, do you find any other land not in the additions?

A. I do.

Counsel for the plaintiff objects to the question for the reasons above stated.

Q. What land do you find?

Counsel for the plaintiff objects to the question for the reasons above set forth.

A. I find a certain tract of land to the east of St. John & Dawson's Addition, which I suppose is owned by William Chrisman.

Counsel for the plaintiff moves the Court to strike from the record answer of the witness on the ground that it is incompetent.

Q. Is there any other property described in the addition, not in the addition, but any other property other than you have mentioned described on that plat as being within the blue lines which you say include the sixty-three acres we have referred to?

Counsel for the plaintiff objects to the question on the ground that it is incompetent, irrelevant and immaterial, and leading.

A. I do.

Q. Well, what do you find?

A. A certain tract marked depot grounds connected with the Missouri Pacific railway.

Q. Is there any other than what you have designated?

Counsel for the plaintiff objects to the question for the reasons above set forth.

A. I think not. I believe I have mentioned all the lands that are designated in that tract.

Q. That is in the sixty-three acre tract?

Counsel for the plaintiff objects to the question as incompetent and immaterial and leading.

A. Yes, sir.

Take the witness.

CROSS EXAMINED.

By P. P. Kelley: Q. What did you say your name was?

A. Grinter, P. H. Grinter.

Q. What did you say your occupation was?

A. Civil engineer and land surveyor.
Q. Did you make that plat, Mr. Grinter?
A. What is that?
Q. Did you make the plat from which you have been testifying?
A. In part I made it.
Q. What is that?
A. I made the plat in part.
Q. Is your testimony confined to the part of the plat which you made yourself?
A. It is.
Q. Was that made from actual measurements taken on the ground by you personally?
A. Yes, sir.
Q. It was made from actual measurements taken by you?
A. It was.
Q. Well, when do you say you made the measurements?
A. Those measurements have been made at various times within the last few years.
Q. Well, within how many years?
A. I will say within the last three years.
Q. That is all. I now move to strike out all of this testimony of this witness from the record as immaterial, irrelevant and incompetent, and move the court to tax the costs of same to the defendant.

By Mr. Southern: I offer now a copy of the original plat of Woodson & Maxwell's Addition to the town of Independence, with the accompanying certificates of dedication and acknowledgment and of verification, and it is admitted that the original plat is in the possession of and under the control of the recorder of deeds for Jackson county, Missouri, and that his office is the only and proper place for its deposit, and that he is the only proper custodian of it, and that the plat was signed and executed as it purports to have been, and ask that it be marked "Exhibit V S." (Recorded 31st day of March, 1851).

By Mr. Southern—I now offer the plat of St. John & Dawson's Addition to the city of Independence, Missouri, with the same certificates and acknowledgment and dedication, and the same admission as to the custody and control of the original as were made in connection with the last offer, and ask that it be marked "Exhibit W S." (Recorded 12th day of May, 1866).

By Mr. Southern—I offer also the plat of St. John's Addition with the entries as to admissions as were made in connection with the two last offers, and ask that it be marked "X S." (Recorded 12th day of May, 1866).

By Mr. Southern—Also plat of Prospect Place, an addition to the city of Independence, with the same admissions as hereinbefore noted, and ask that it be marked "Y S."

By Mr. Southern—Also I offer a plat of Torpey & Surface's sub-division of lots four and five, and the east part of lot six in St. John's Addition to the city of Independence, Missouri, marked "Z S." with the same admissions. (Recorded March 26, 1886).

By P. P. Kelley—Each and all of the plats offered in evidence

are objected to for the reason that they are incompetent, irrelevant and immaterial, and do not describe the property in controversy in this suit.

By Mr. Southern—I now offer a copy of the deed from James Poole to John Maxwell, with accompanying certificates, for the purpose of showing the date of the record of said deed. (The copy of deed above referred to and offered in evidence is marked "Exhibit S N"). The original being in evidence this is offered for the purpose of showing the date of the recording.

By P. P. Kelley—That is objected to for the reason that it is immaterial and not the best evidence, the original deed having been introduced in evidence which shows the date of the recording.

Thomas Maxwell, of lawful age, being produced, sworn and examined on the part of the defendants, testified as follows:

DIRECT EXAMINATION.

By Mr. Southern: Q. State your name to the reporter.

A. Thomas Maxwell.

Q. Look at this map, Mr. Maxwell, marked "Exhibit A S O," the one I now hand you, and see if you recognize it, and if you do recognize it so state the fact to be.

A. Well, what do you want?

Q. Well, state if you recognize it, and recognize on it within the blue lines, within the boundaries of the tract as indicated within these blue lines, the description of a tract of land with which you were or are familiar?

Counsel for the plaintiff objects to the question asked the witness on the ground and for the reason that it is incompetent, irrelevant, immaterial and leading.

A. Yes, sir.

Q. You recognize within these blue lines here the description of a tract of land with which you are familiar?

A. Yes, sir, I do.

Q. How long have you known it?

A. Well, I should say that I have known it for forty years or more.

Q. You have known it for forty years?

A. Yes, sir, about that time, I think.

Q. Well, did you know it as far back as the year 1848?

A. No, sir, I did not.

Q. Well how far back did you know it?

A. With reference to the year do you mean?

Q. Yes, sir. About what year did you first know it; how far back have you known it?

A. Well, I have known it ever since I can remember, but I reckon I was too small to say that I knew it then.

Q. Well, about what time do you remember first knowing it?

A. Well, I have known it I would say from—well, I would say I knew it a long time ago, for I have been on the place frequently ever since I was a small boy. I have been on it many a time for that matter. Well, I would say that I have known that place from '50 up to the present time. That is I have known it well since that

time; but I was on the place of course before that time, but I don't remember so much about it.

A. Whose property did you know it as first?

Counsel for the plaintiff objects to the question asked the witness on the ground that it is immaterial and leading.

A. I knew it as my father's property first.

Q. Well, how long ago was that; well, you said forty years ago, so let that pass. Now, how old were you in 1848?

A. In '48; let us see, I was then about seven years old. Yes, sir; in '48 I was seven years old.

Q. Well, how long after that would you put the date at which you knew it to be your father's property?

Counsel for the plaintiff objects to the question on the ground that it is immaterial.

A. Well, I should say it would be in the early fifties somewhere.

Q. Well, about how early in the fifties would it be?

A. Well, I should say somewhere in '50 or '51; somewhere along in there I think.

Q. Do you know at any time whether your father did anything with that property?

A. What property?

Q. This property designated in these blue lines on this plat, and which you say your father owned at one time?

A. Well, yes, I know he had in law a good while. I have heard him speak about it and say that he and Woodson had a law suit over it, but they compromised their suit in some way or other, and divided the property in some shape. I could not say how that was done, but that was what I understand was done with it.

Counsel for the plaintiff objects to the answer of the witness on the ground that it is immaterial and hearsay, and moves the court to exclude it from the record for that reason.

Q. Well, now, Mr. Maxwell, what do you know with reference to any improvements that were on the place at any time?

Counsel objects to the question asked the witness on the ground that it is leading.

Q. Answer the question, Mr. Maxwell.

A. What is the question?

Q. I asked you what you knew, if anything, with reference to any improvements that were on that place at any time?

A. Well, now, it has been a long time ago, and I don't know that I can say anything much about that.

Q. Well, give your best recollection with reference to any improvements that were on the place at any time say prior to 1852?

A. Well, as I say, it has been a long time ago, and I can't remember very well, but it strikes me that the place has been fenced, but I could not say positively.

Q. Well, do you know whether your father fenced it or not, or any part of it?

Counsel for the plaintiff objects to the question on the ground that it is leading.

A. I could not say that he did. Really I could not say. I

know that he had—well, I know that the year he died he was going to put a building on it though. I remember that.

Q. He was going to put a building where?

A. On some part of the property.

Q. Do you know of any acts of ownership that your father ever exercised over that property or any part of it?

Counsel for the plaintiff objects to the question asked the witness on the ground and for the reason that it is incompetent, irrelevant and immaterial and leading.

A. On that tract of land?

Q. Yes, sir, or the whole of it?

A. Yes, sir.

Counsel for the plaintiff objects to the question asked the witness on the ground that it calls for an opinion of the witness and not for the facts.

A. Yes, sir.

Q. What was it?

A. I know he sold lots in it.

Q. Do you remember who he sold them to?

A. To a man by the name of Murray.

Q. Lots where?

A. I think them were the lots.

Q. What are they?

A. There is a couple of these lots that I think old man Murray bought—John Murray's father. I am pretty sure he bought them.

Counsel for the plaintiff objects to the answer of witness on the ground that it is incompetent and immaterial, and does not refer to the property in question, and moves the court to strike the answer from the record for that reason.

Q. Where did the lots lie with reference to this plat?

A. Well, I think they were corner lots; if I am not mistaken they were corner lots. I think they were upon the corner, and I think he took two of them.

Q. That was Murray?

A. Yes, sir. I remember when old man Murray came down to close the trade up, for I heard him there at the house at the time.

Q. On what street was that?

Counsel for the plaintiff objects to the question asked the witness on the ground that it is irrelevant and immaterial, and leading.

A. Well, it was on Lexington street, this street out here.

Q. They were on Lexington street?

A. Yes, sir.

Q. That was inside these blue lines as indicated on this plat here, that is, the lots that your father sold to Murray were inside these blue lines?

A. Yes, sir.

Counsel for the plaintiff objects to the question for the reasons above set forth.

Q. Now, what date did your father die? Give the date of his death, if you can.

A. Father died in the latter part of April in 1856.

Q. In the latter part of the month of April, 1856, your father died?

A. Yes, sir.

Q. That is when your father died?

A. Yes, sir.

Q. Well, after his death, do you know who controlled the property?

Counsel for the plaintiff objects to the question asked the witness on the ground that it is irrelevant and immaterial and is leading.

A. Yes, sir, I know who did.

Q. Well, who was it?

A. Why, Smart controlled it. I know one thing there was a little corner in here—it must be west of here (indicating a point on plat).

Q. West of where?

A. Well, it must be west of the old Temple lot there.

Q. A little triangle in there?

A. Yes, sir.

Q. Just west of the Temple lot?

A. Yes, sir. I remember that, for my mother leased it to a man by the name of Trott for a brick kiln.

Q. She leased it on the corner there?

A. Yes, sir.

Q. And that is just west of where the present enclosure is there?

Counsel for the plaintiff objects to the question for the reasons above set forth.

A. Yes, sir.

Q. That is just west of the present Temple lot?

A. Yes, sir. And I remember that they were very particular about having any grading done on that lot. I remember that, and it was just that little corner in there that was leased to this man Trott for the brick kiln. I remember them talking about it, and he spoke about getting that corner or triangle there.

Counsel for the plaintiff objects to the question asked the witness and the answer of the witness regarding this piece of ground described, for the reason that it is hearsay, incompetent, irrelevant and immaterial, and does not refer to the property in controversy, and does refer to property about which there is no question as to its belonging to the plaintiffs, if the plaintiffs claim it belongs to them, and moves the court to strike the answers of witness from the record for that reason.

Q. Do you know anything about a field being on this ground at any time prior to the war?

Counsel for the plaintiff objects to the question on the ground that it is irrelevant and immaterial and leading.

A. Well, I could not say as to that, Mr. Southern. It is just this way, Mr. Southern; I could not be positive on that score at all. I know one thing though, and that is that there has been a great deal of trouble over that property there; I know that.

Q. Did Woodson ever have it in his possession, or any part of it?

A. Not that I know of.

Q. Do you know anything with reference to a rock fence being on any of the lines around it?

A. Yes, sir I know something about it.

Q. About the rock fence?

A. Yes, sir, I know something about the rock fence.

Q. You remember that there was a rock fence there on some of these lines?

A. Yes, sir.

Q. Where was that rock fence?

A. I can't say just where all of it was, and I don't know that it was on the line, but I think it was, and it run around in this way.

Q. I am talking now about Woodson & Maxwell's Addition, as well as the balance of the tract.

A. Yes, sir, I understand; it is this tract here inside of these blue lines that you are talking about.

Q. Well, was there any field there in any part of this tract bounded by these blue lines at any time before the war?

A. Yes, sir, I think there was.

Counsel for the plaintiff objects to the question asked the witness on the ground that it is irrelevant, immaterial and incompetent, and leading.

Q. There was a field there?

A. Yes, sir, I think so.

Q. Well, was there?

A. Yes, sir.

Q. Well, can you tell me something about the extent of the field?

A. No, sir.

Q. Can you tell me something about the extent of the rock fence?

A. Well, no sir, I can't tell you much about the size of that field, or how much there was of the rock fence there, but I remember that there was a pretty big long piece of it, for I remember that we got behind it one night to try the federals a whack during the war.

Q. That was during the war?

A. Yes, sir, there was a fight here, and we got behind it I remember to try them a whack.

Q. In what year was that?

A. That was in the early part of the war.

Q. Had that fence been there for some time before that? Was it or was not a new fence at that time?

A. Oh, it had been a long time since it had been put there apparently. It was not a new fence at that time I think.

Q. For how long had it been there at that time?

A. I could not say. I really could not remember. I guess it was put there before I was old enough to remember anything about it.

Q. Well, what was it there for?

A. It was an enclosure.

Q. An enclosure for what purpose?

A. To enclose that land, of course; it was not put there for fun, I think.

Q. What land or ground do you refer to?

A. This here.

Q. Well, do you refer to the ground inside of these blue lines as indicated on this plat?

A. Yes, sir. Well, now, it don't seem to me that it went clear up there. It don't seem to me that it did. It seems to me that that part that it enclosed was probably Woodson's property, for I think he put it there.

Q. Where was that field as near as you can recollect?

Counsel for the plaintiff objects for the reasons above set forth.

A. Well, it laid out here somewhere it seems to me.

Q. Where was that from the rock fence that you say was there?

A. It was right there; it was this way.

Q. Running east?

A. Yes, sir; kind of in an easterly direction.

Q. To what line; how far east did it run?

A. I could not say. I remember kind of indistinctly that it was a considerable field or pasture.

Q. Well assume that that street there was Walnut street, would you say that it went up that far?

A. Yes, sir, I would say that it went up that far.

Q. You would say that it run up to Walnut street?

A. Yes, sir.

Q. Well, did it run up anywhere else?

A. Yes, sir, it strikes me that it run up further east than that, but I could not say how far it did run. I did not pay much attention to it or try to keep it in my recollection. Of course I knew at one time where it was, but it has been so many years ago that I have forgotten pretty much all I knew about it.

Q. On which side of Walnut street was it, the north side or the south side?

A. The south side.

Q. How far did it run that way?

A. I couldn't say. I know there was a considerable little field in there. I remember it ran out there to Woodson's, and that is on Temple street.

Q. Well, about how much was enclosed there with the fence?

A. Well, I think that whole thing was enclosed there.

Q. Do you think that it went as far as the blue line east of the map here?

Counsel for the plaintiff objects to the question asked the witness on the ground that it is leading and irrelevant and immaterial.

A. Well, yes, sir, I would think that it did. Yes, sir, I think that was all enclosed, but I could not say positively though.

Q. Well, now, have you any recollections as to who enclosed it?

A. No, sir, I have not.

Q. You don't recollect anything about who enclosed it?

A. No, sir.

Q. Was it enclosed there when your father owned any part of it?
A. Yes, sir.
Q. What part of it was enclosed then?
A. That part of it that was fenced was enclosed then.
Q. Your father died in what year, did you say?
A. My father died in 1856.
Q. How long before his death was it enclosed?
A. Well, now, that is something I could not say.
Q. Was it enclosed some years before his death?
A. Yes, sir, it was enclosed for some years before his death, for I remember that it seemed to be an old enclosed place in there during the war. I remember that at that time it was all an enclosure.
Q. Was it cultivated?
A. Well, now, I could not say. I don't recollect whether it was cultivated or in pasture at that time, but it was under fence, that place was. I remember that well enough, and I expect there are others who remember the same thing here yet.
Q. Do you recognize on this plat, north of what is marked on it as Walnut street, and within the blue lines, as any addition to the city of Independence?
A. Yes, sir.
Q. You do?

Counsel for the plaintiff objects to the question asked the witness on the ground that it is leading, incompetent and immaterial, and calls for an opinion of the witness.

A. Yes, sir.
Q. Well, what is it?
A. I recognize that as Woodson & Maxwell's Addition to this city.
Q. You recognize it as Woodson & Maxwell's Addition to the city of Independence?
A. Yes, sir.
Q. How long ago do you remember of any one living there in Woodson & Maxwell's Addition?

Counsel for the plaintiff objects to the question for the reasons above set forth.

A. Well, it is hard for me to say, as I before stated, on account of the length of time that has elapsed, but old man Murray must have been there as long ago as '50 or '51, I expect.
Q. Well, was he there in '55?
A. Yes, sir.
Q. Was he there in 1860?
A. Well, I couldn't say whether the old man was alive then or not.
Q. Do you remember when he died?
A. Not the date.
Q. Was the house there in 1860?
A. Yes, sir.
Q. Is it there still?
A. I don't know. I think not, but still I don't know about that.

Q. What sort of a house was it?

A. A little brick. I haven't noticed it lately, and so I can't say whether it is there now or not. I did not think it was of any importance, and so I don't know whether that house is still there or not.

Q. Well, was there anybody else living in there at that time, or along about that time?

A. I can't say.

Q. Do you know of any other house being built in there prior to the war?

A. I think there was.

Counsel for the plaintiff objects to the question asked the witness on the ground and for the reason that it is incompetent, irrelevant and immaterial, and does not refer to the land in controversy in this case.

Q. What was your answer?

A. I said I thought there was; but still I do not know, Mr. Southern.

Q. You think there was?

A. Yes, sir.

Q. But you don't call to mind who had a house there?

A. No, sir.

Q. Well, was there any house built there after the war?

A. Yes, sir.

Q. Was there more than one?

A. Oh, yes, sir; several of them.

Q. How soon after the war did the building begin?

Counsel for the plaintiff objects to the question asked the witness for the reasons above set forth.

A. It was right away after the war.

Q. Right directly after the war there was houses built there?

A. Yes, sir; several of them, I think.

Q. You mean by that answer that it was right directly after 1865?

Counsel for the plaintiff objects to the question asked the witness on the ground that it is leading and incompetent.

A. Yes, sir.

Q. To what extent have houses been built there in Woodson & Maxwell's Addition?

A. Well, it has been considerable. There has been considerable building going on there. It has mostly all been built up, you might say.

Q. There has been houses built on all the lots?

A. Yes, sir.

Counsel for the plaintiff objects to the question asked the witness on the ground and for the reasons that it is leading, immaterial and not affecting the land in question.

A. Beginning at what time was this building done?

A. From what time; do you want to know the time that they commenced building down there?

Q. Yes, sir.

A. Well, say beginning in 1850, and from that time on down.

That was the first, I think, and from that time on up more or less it has continued.

Q. That was the time that the building commenced?

A. Yes, sir, I think so; and they may be building there yet for all that I know. I have not noticed to state particularly what time there was the most building done down there, but I notice that it is mostly all built up.

Q. Do you know of any buildings on the part south of Walnut street?

A. Yes, sir.

Counsel for the plaintiff objects to the question for the reasons above set forth.

Q. How was it with reference to that before the war?

Counsel for the plaintiff objects to the question for the reasons above set forth.

A. Well, I could not say as to that.

Q. That is to say, you don't call any to mind?

A. No, sir.

Q. Well, were there any buildings built there subsequent to 1860?

Counsel for the plaintiff objects to the question for the reasons above set forth.

A. 1860? Oh, yes; I know when St. John built there. He and Dawson built there. I remember that now.

Q. Well, what did he do?

A. St. John?

Q. Yes, sir.

A. He built there, and laid out an addition.

Q. He sold lots there, built a house and laid out an addition, did he?

Counsel for the plaintiff objects to the question asked the witness on the ground that it is leading and immaterial.

A. Yes, sir.

Take the witness.

CROSS-EXAMINATION.

By P. P. Kelley. [For cross-examination see plaintiff's abstract].

William R. Wilson, of lawful age, being produced, sworn and examined on the part of defendants, testified as follows:

DIRECT EXAMINATION.

By Mr. Southern—Before proceeding I wish to state that owing to circumstances which prevent the defendants from completing their testimony as to the tax receipts right now, it is agreed that the defendant has the right to introduce their testimony on the tax receipts hereafter, and no objection on that account, or for that reason, will be made by the plaintiff to the defendants doing so; that is no objection will be made by the plaintiff to the introduction of the tax receipts, on the ground of not following it up consecutively, and that other witnesses may be placed on the witness stand for the pur-

pose of convenience only, and for the purpose of expediting the taking of these depositions. Is that proper, Mr. Kelley?

By Mr. Kelley—That is all right. We will make no objection to this course.

By Mr. Southern: Q.—What is your full name?

A. William R. Wilson.

Q. Mr. Wilson, where do you reside?

A. In Jackson county, Missouri.

Q. Here in Independence?

A. Yes, sir.

Q. How long have you resided here?

A. Oh, off and on, nearly all my life.

Q. How old are you now, Mr. Wilson?

A. I am fifty-six years of age.

Q. And you have resided here most all of your life, I believe you stated?

A. Yes, sir.

Q. Where did you live in your boyhood?

A. Most of the time here in Independence.

Q. Were you born here?

A. No, sir; but I was quite young when I came here.

Q. At what age did you come here?

A. Three years of age.

Q. Where did you live when you came here?

A. In Independence.

Q. At what point in Independence?

A. Down here by Waggoner's mill.

Q. Where is Waggoner's mill situated?

A. It is situated on Spring street.

Q. Where is it with reference to the Westport road?

A. It is east of the Westport road.

Q. That is, Waggoner's mill is east of the Westport road?

A. Yes, sir.

Q. Where is it with reference to the Missouri Pacific depot yards?

A. Do you mean the main line depot?

Q. Yes, sir.

A. Where we stayed is east of that.

Q. How far east of that?

A. About a quarter—a little over a quarter of a mile from that east is where we lived.

Q. That is a little over a quarter of a mile east of the main line depot of the Missouri Pacific railroad?

A. Yes, sir; we lived there on Spring street, a little east of Swope's place—Logan Swope's place.

Q. Now, I present to you a map marked "Exhibit A S O," and ask you if the street near about the middle of that map, running north and south, is called Spring street?

A. What is that?

Q. I asked you if that street running north and south there, near about the middle of the map, should be called Spring street?

A. Yes, sir.

Q. That is Spring street?

A. Yes, sir.

Counsel for the plaintiff objects to the question asked the witness on the ground that it is leading, irrelevant and immaterial.

Q. What property would this be here as designated within these blue lines?

Counsel for the plaintiff objects to the question asked the witness on the ground and for the reason that it is incompetent, irrelevant and immaterial and leading.

Q. You may answer the question.

A. I don't know what it would be called.

Q. Well, would you be acquainted with the property within these blue lines if you lived anywhere on Spring street; that is if you lived anywhere on Spring street east of this property?

Counsel for the plaintiff objects to the question for the reasons above set forth.

A. I would know where it is now, of course.

Q. Well, when you see on the map here a blue line that part of it would represent the Westport road, would it not?

Counsel for the plaintiff objects to the question for the reasons above set forth.

A. Yes, sir.

Q. Do you know where Nebraska street is in this city, or Union street?

A. Yes, sir.

Q. Do you see a blue line on this plat or map that would represent that street?

A. Yes, sir.

Q. You know where the main line of the Missouri Pacific depot grounds are do you not?

A. Well I should say I do.

Q. Do you recognize a blue line on this map that would represent the line of that railroad?

A. Yes, sir. Well, now, I could not tell you whether it runs right along the line of that railroad down there or not.

Q. Of the Lexington Branch of that railroad I mean?

A. Well, it is somewhere near it; that is it there is it not? I think that is it there. That is where it ought to be anyway.

Q. Now, Mr. Wilson, with reference to the blue line marking the eastern boundary of this map, can you locate a point known as Woodson's house, Woodson's residence?

A. Yes, sir; let me see.

Q. It is not within the blue lines at all, but with reference to it?

A. What do you want to know?

Q. Can you find the point at all, that represents the place where the old Woodson house or residence was located?

Counsel for the plaintiff objects to the question asked the witness on the ground and for the reason that it is incompetent, irrelevant and immaterial.

A. Well, I can't find it; I don't think I can find it.

Q. Well, Mr. Wilson, can you recognize a line on the map representing Walnut street?

A. Yes, sir.

Q. Does Walnut street run through here, or is it connected with the property represented within these blue lines?

Counsel for the Plaintiff objects to the question asked the witness for the reasons above set forth.

A. It runs through it.

Q. Where would you locate the old Woodson residence with reference to Walnut street?

Counsel for the plaintiff objects to the question asked the witness on the ground and for the reason that it is incompetent, irrelevant and immaterial and leading.

A. Oh, well, let me see; he used to live down near where we were raised, down near the mill. Do you mean where he built the new house? Is that what you want?

Q. Yes, sir. Where did he build the new house, and where did it stand with reference to Walnut street?

A. Well, it was somewhere along here on this piece of ground.

Q. Now, was it on this piece of ground, or on the one east of it?

Counsel for the plaintiff objects to the question for the reasons above set forth.

A. Well, now, I could not say. Let me see: I think it was on this one here.

Q. Well, suppose you recognize this green plat here—this pink piece of ground here on the north side of Walnut street as Woodson & Maxwell's Addition, where then would you recognize that new Woodson house as being?

Counsel for the plaintiff objects to the question asked the witness on the ground that it is incompetent, irrelevant and immaterial with reference to Woodson & Maxwell's Addition whether it be north or south of it.

A. I think it would be south of it.

Q. Well, would it be east or west of it?

A. Let me see, sir; I cannot tell from this plat, for it seems to be sort of left-handed to me this way.

Q. Well, this is the way to place the map; this is north and that is south, and this is east and that is west. Now, would it be east or west of that?

A. Well, I could not say exactly. Now, this is Walnut street, you say?

Q. Yes, sir, that is Walnut street.

A. This is Walnut street running to the west.

Q. Now, west of Pleasant street where would it be?

A. That is running north and south.

Q. Now, where is Nebraska street, or Union street running north and south?

A. Yes, sir, that is Union street there.

Q. Now, where was Woodson's residence, the brick residence, with reference to Pleasant street?

A. It is west of Pleasant street.

Q. Well, how far west of Pleasant street was it?
A. Yes, sir, it is west of Pleasant street.
Q. Well, that is what I want to know. State about how far west of Pleasant street it is.
A. I guess about three hundred and fifty yards.
Q. Now, where was it with reference to Walnut street?
A. It was south of Walnut street, I think.
Q. It was south of Walnut street?
A. I think so. That is the one running over by George Shaw's.
Q. Yes, sir.
A. Well, that would be south of Walnut street, probably a quarter of a mile.
Q. Then would you locate that residence within these blue lines, or outside of them?

Counsel for the plaintiff objects to the question asked the witness for the reasons above set forth.

A. This is west?
Q. Yes, sir.
A. And this is south?
Q. Yes, sir.
A. What is that?
Q. That is the quarter-section line.
A. This is Union street?
Q. Yes, sir; how far would it be from that?
A. I don't know how far it would be from Union street. I don't hardly think that it would go over within the blue lines.
Q. If the blank space within the blue lines that don't show any additions should be the Chrisman pasture, now where would the Woodson residence be?

Counsel for the plaintiff objects to the question asked the witness for the reasons above set forth, and on the ground that it is leading.

Q. Answer the question.
A. It would be east of it, I think; yes, it would be off east of it.
Q. And would not be within the blue lines?
A. No, sir.
Q. Now, assuming that the blank space that is within the blue lines should now be known as the Chrisman pasture?
A. Yes, sir.
Q. The old Chrisman house is east of that?
A. Yes, sir. You mean the old Woodson house, I suppose?
Q. Yes, sir; the old Woodson house is east of that?
A. Yes, sir.
Q. That is east of the blank space that is within the blue lines?
A. Yes, sir.
Q. How far east of it?

Counsel for the plaintiff objects to the question asked the witness on the ground that it is leading and immaterial.

A. Well, about two hundred yards.
Q. Now, was there any enclosure; how long ago was there an enclosure, if there was one, west, immediately west of the Woodson residence?

Counsel for the plaintiff objects to the question asked the witness on the ground and for the reason that it is immaterial and incompetent.

A. Well, that has been enclosed as far back as I can remember.

Q. Well, how far back can you recollect?

A. Well, I was going to school in '46 and '47, and it was enclosed then.

Q. It was enclosed in 1846 and '47?

A. Yes, sir. That was the time I was going to school, and I recollect that it was enclosed then.

Q. At that time how far was that enclosure run from the blue lines immediately east of the blank space? Where would the enclosure go running west and south of Walnut street?

A. In what way?

Q. In the way I have described, how far would that enclosure that you then knew extend at that time?

Counsel for the plaintiff objects to the question for the reasons above set forth.

A. It would go over to the old Westport road.

Q. The blue line here is representing the Westport road, does it not?

A. Yes, sir; and from there it went south as far as I can remember; I mean north up Walnut street.

Q. How far south did it go?

A. It went down to the railroad. There was a rail fence down there where the railroad is now that was known as the Davison property.

Q. So, then, was the space represented on this map here, and represented by the blank space and within the blue lines, south of Walnut street and north of the blue line representing the line of the railroad, and east of the blue line representing the Westport road, and west of the blue line marking the east of the tract on the map all enclosed?

Counsel for the plaintiff objects to the question asked the witness on the ground that it is incompetent and immaterial and leading.

A. I think it was.

Q. Then, if it was enclosed, at how early a date was it enclosed?

A. I could not say.

Q. How old were you when you knew it to be enclosed first?

A. About twelve or thirteen years old, or ten or eleven, along there somewhere.

Q. How old were you when you lived there?

A. At the time I was living near it, do you mean?

Q. Yes, sir, how old were you when you lived there?

A. Twelve or fourteen.

Q. Were you that old when you came there?

A. No, sir.

Q. When you first came there how old were you?

A. I was living there when I was about twelve, and from that on up.

Q. That was when you first came there?

A. Yes, sir.

Q. I thought you said you came there when you were about three years old?

A. No, sir, I was that old when we first came here to this county, and we moved up to High Grove place when we first came here, and from there down here to this place, and then back again. We did not at first live down here.

Q. The part that you say was enclosed, you found it enclosed at what time?

A. Well, when I went to school there it was enclosed, I remember that, and I went to school in '46, '7 and '8.

Q. Where did you go to school?

A. We used to go to school out there to Rock creek.

Q. Do you know who owned it at that time?

Counsel for the plaintiff objects to the question asked the witness for the reason that it is immaterial and incompetent.

A. No, sir.

Q. Do you know when Woodson built the brick residence there?

Counsel for the plaintiff objects to the question for the reasons above set forth.

A. Yes, sir, I know pretty near it.

Q. Well, when was it?

A. He commenced it in the fall of '47, I think. If I am not greatly mistaken it was in the fall of '47 that he commenced building it.

Q. Do you know whether it was completed or enclosed at that time?

Counsel for the plaintiff objects to the question for the reasons above stated.

A. Yes, sir.

Q. It was completed?

A. Yes, sir.

Q. Do you know who exercised ownership over it then?

Counsel for the plaintiff objects to the question for the same reasons above stated.

A. Woodson.

Q. Woodson exercised the right of ownership over it then?

A. Well, I expect he did; he had charge of it.

Q. How long afterwards did Woodson have charge of it?

A. I don't know.

Counsel for the plaintiff objects to the question for the reasons above set forth.

Q. What was your answer?

A. I don't know exactly how long it was, but it was for some time.

Q. Well, can you state that he had charge of it in 1850?

Counsel for the plaintiff objects to the question asked the witness on the ground that it is leading and immaterial to any of the issues in this case.

A. I don't know.

Q. Do you know of anybody but Woodson having charge of it?

Counsel for the plaintiff objects to the question for the reasons above set forth.

A. I don't know of anybody but Woodson and Swope—Woodson and Chrisman, I mean.

Q. Do you know at what time Chrisman had charge of it?

Counsel for the plaintiff objects to the question for the reasons above set forth.

A. No, sir.

Q. Do you know whether he took charge of it after the war, or before the war?

A. Yes, sir.

Q. Well, which was it?

A. Chrisman took charge of it after the war.

Q. Do you know whether or not he obtained it from Woodson?

Counsel for the plaintiff objects to the question asked the witness for the reasons above set forth, and for the additional reason that it does not call for the best evidence.

A. Yes, sir, he got it from Woodson.

Q. Do you know where the Woodson & Maxwell Addition is?

A. Yes, sir.

Q. Is it on the piece of ground within the blue lines?

Counsel for the plaintiff objects to the question asked the witness on the ground and for the reason that it is incompetent, irrelevant, and immaterial, leading, and does not call for the best evidence.

A. Yes, sir.

Q. It is within these blue lines?

A. Yes, sir.

Q. Can you state whether anyone lived on the Woodson & Maxwell Addition prior to the war?

Counsel for the plaintiff objects to the question for the reasons above set forth.

A. I don't know.

Q. What is that? I did not quite catch that.

A. I say I don't know whether they did or not.

Q. Prior to 1860, I would say?

A. Well, yes; there were a few persons living out there.

Q. You say there were a few persons living out there?

A. Yes, sir.

Q. Do you or did you know of anyone who exercised ownership, the right of ownership, over Woodson & Maxwell's Addition or any part of it, prior to the war?

Counsel for the plaintiff objects to the question asked the witness on the ground and for the reason that it is incompetent, irrelevant and immaterial, is leading, and not the best evidence, and calls for an expression of opinion by the witness.

A. No, sir: well, yes I did too; I knew of several persons who were there right on the corner where Warneke's house is.

Q. Do you know the names of any of these parties?

A. I knew a man by the name of Dunn.

Q. He lived there?

A. Yes, sir.
Q. About where would that be on this map?
A. Right about there.
Q. That would be on what lot?
Counsel for plaintiff objects to the question for the reasons above stated.
A. It was on the corner of Lexington and Union streets.
Q. Was Nebraska street ever called Union street?
A. What is that?
Q. Was the street that is marked Nebraska street, was that ever called Union street?
A. I don't know.
Counsel for the plaintiff objects to the question for the reasons above set forth.
Q. What is that?
A. I say I don't know whether it was ever called Union street or not. I know it was called—it is known now as Union or Gilpin (?) street.
Q. Well, you say that some one lived on this addition right there?
A. Yes, sir, right there in that corner.
Q. Just right in that corner or angle?
A. Yes, sir.
Q. What angle would that be with reference to the bounds of the plat, this being north and this being east?
Counsel for the plaintiff objects to the question asked the witness for the reasons above set forth.
A. It would be on the northeast corner of the addition.
Q. On what street would it be?
Counsel for the plaintiff objects to the question for the reasons above set forth.
A. Lexington and Union.
Q. Well, if Union street is called Nebraska street here, it would be Nebraska street, would it not?
A. Yes, sir, Nebraska or Gilpin.
Q. Do you know of anybody else who lived in there on Woodson & Maxwell's Addition?
A. No, sir, I don't know of anybody that owned any property in there.
Q. Well, did you know of anyone living in there whether they owned property or not?
Counsel for the plaintiff objects to the question for the reasons above set forth.
A. I can't recall any names, but I think there was.
Q. Well, right away after the war was there anybody living in there?
Counsel for the plaintiff objects to the question for the reasons above set forth.
A. Yes, sir, there were parties living in there, but I don't know the names of the parties.
Q. How long ago has it been since people began to settle in there, that is in Woodson & Maxwell's Addition?

Counsel for the plaintiff objects to the question for the reasons above set forth.

A. Well, it was since the war.

Q. Well, how soon since the war; how early after the war was it?

A. Immediately after the war.

Q. That is all. Take the witness.

CROSS-EXAMINATION.

By P. P. Kelley: (See plaintiff's abstract.)

John H. Taylor, of lawful age, being produced, sworn and examined on the part of the defendants, testified as follows:

DIRECT EXAMINATION.

By Mr. Southern: Q. Mr. Taylor, how long have you lived here in Independence?

A. Since '51, except that for some years since that time I have been away.

Q. Well, how far, or how long back would your memory extend as to locations?

A. Well, I would say to '51.

Q. Do you recognize the map which I now hand you marked "Exhibit A S O," as indicating any boundaries around Independence.

A. Yes, sir.

Q. You recognize that map?

A. Yes, sir, and I recognize the property that is indicated on that map. I recognize the property on that map.

Q. Do you recognize the property within the blue lines there?

A. Yes, sir.

Q. How far back do you recognize any of that property as being enclosed?

Counsel for the plaintiff objects to the question asked the witness on the ground that it is immaterial.

A. Well, soon after I came here I presume. At that time I was a boy living down there in the neighborhood of that property, and while I was there Mr. Woodson moved over somewhere in this neighborhood.

Q. He moved down there you say somewhere?

A. Yes, sir.

Q. Was it inside or outside of the blue lines?

A. Well, it was about Pleasant street. I presume he moved in here somewhere.

Q. That is, not inside these blue lines?

A. No, sir. I presume it must have been along in here somewhere his house was.

Q. What can you say with reference to the enclosure of the property lying within the blue lines?

A. As to whether it was inclosed?

Q. Yes, sir.

A. Well, as I remember it, there was a road across here, or a street across here, and I think this was all vacant property until Woodson & Maxwell's Addition was laid off here.

Q. You think that this which is colored pink, and that part there enclosed by the blue lines was vacant property until that time?

A. Yes, sir; all this was vacant property.

Q. Now, you say all that was vacant property?

A. Yes, sir.

Q. What do you mean by "all this?"

A. That from Walnut street up north to the Westport road. It was what we called the Temple lot, and the Westport road was the western line of it. It was the western line of the Woodson pasture, and I have forgotten what kind of a fence was along here, but I know there was something along here.

Q. Along Walnut street west?

A. Yes, sir.

Q. Running from the Westport road through here?

A. Yes, sir.

Q. Running east through here (indicating point on plat)?

A. Yes, sir.

Q. Do you know anything about that addition?

A. Yes, sir, I have a recollection of the time that addition was laid off.

Q. Was that on the south of the addition ever enclosed?

Counsel for the plaintiff objects to the question asked the witness on the ground that it is immaterial.

A. Yes, sir.

Q. That was north, and this was Woodson's pasture, and Woodson lived over here?

A. Yes, sir.

Q. Was Woodson's pasture within these blue lines as indicated here on this plat?

A. There was a fence here between his house and the pasture and there was a house in here. It might take all that up there, but I don't know about that.

Q. And where was that with reference to Walnut street. Did Walnut street adjoin it on the inside?

A. Walnut street, as well as I remember it, run down to the pasture.

Q. On the north?

A. Yes, sir.

Q. Was that within the blue lines?

A. Yes, sir.

Q. And what bounded the pasture, if anything, on the west?

A. A stone wall I think.

Q. What on the east?

A. On the east there was a kind of a fence separated it from his lot.

Q. Would that fence correspond with the blue line on the east?

A. Yes, sir. I think this street extended right along here.

Q. Well, on the south side did it?

A. Well, it is my recollection that there was a rail fence down along through here.

Q. Well, is it not a fact that before they opened Walnut street that fence extended through to the Westport road?

Counsel for the plaintiff objects to the question asked the witness on the ground and for the reason that it is leading and immaterial.

A. Yes, sir; but I don't remember distinctly that that was extended through there. I think it was, but I am not positive.

Q. Now, do you know of any one who exercised any acts of ownership over any of this property here in Woodson & Maxwell's Addition, which is designated on the map here by the pink or blue as you would call it, part of this plat? Do you know of any acts of ownership that was exercised by anyone over this part of the plat, any acts of ownership that was exercised by anyone over any part of Woodson & Maxwell's Addition prior to the war?

Counsel for the plaintiff objects to the question asked the witness on the ground and for the reason that it is incompetent, irrelevant and immaterial, and leading.

A. Well, my recollection is that there was a little house or two in here. Now that is my recollection and I am pretty positive that there was a little house or two in there. This was all open ground through here I think. In fact I know this was vacant ground through here, for I had a runaway with a horse one day, and he run in there and I checked him on this piece of ground, and I remember that it was vacant and open ground at that time.

Q. Now on what place, or about what place, would you place that house of which you are speaking.

A. Well, I can't say, but it was in there some place; it is my recollection that there was more than one house down there.

Q. At what time was that?

A. Well, that was before the war.

Q. Well, now, how long before the war was it?

A. Well, probably along about four or five or six years before the war.

Q. Are you speaking of a time prior to or subsequent to the time of the laying off of Woodson & Maxwell's Addition?

A. It was laid off after the time I am speaking of.

Q. Are you sure of that?

A. Well, that is my recollection. I could not say as to the years.

Q. The time you are speaking of extends back to about '51 or does it extend back of that?

A. Well, I can't say, you know, or I can't remember, but I would say that it at least extends back to that. I was on that place there with Woodson when I was a boy, for we were the same age about, and I used to pass by there when I would be going out to Rock creek with the boys swimming. We would pass by there on that road, and it was along probably from '52 on up. We used to go out on that road to Rock creek to swim, and I think it was from '52 on up.

CROSS-EXAMINATION.

By Mr. Traber: [See plaintiff's abstract.]

Books of Faith—Name of Church—Baptism for the Dead—The Church Records—Endowments—Numbers Emigrating—Polygamy—Nauvoo Church—Reorganized Church—Doctrines.

Defendants allege that said Church of Jesus Christ of Latter Day Saints is identical with the Church that was led by Brigham Young and by him located in Utah territory, and practicing the same tenets and doctrines as were practiced by the same church at Nauvoo, Illinois, including the doctrines of tithing, baptism for the dead and polygamy.

Defendants further allege that after the great body of said Church of Jesus Christ of Latter Day Saints, as aforesaid moved from Council Bluffs, Ia., to Utah territory, a small number thereof remaining behind separated themselves from the church aforesaid, some following J. J. Strang, others W. B. Smith, others Sydney Rigdon and others other factional leaders, and that from dissenters from these the so-called Reorganized Church of Jesus Christ of Latter Day Saints was constituted. That in one form or another it has propagated a combination of tenets and doctrines peculiar to its organization by and through a system unknown to the adherents of the Church of Jesus Christ of Latter Day Saints, from which it claims to have descended as from a mother and from Joseph Smith, Senior, as a father, who inculcated and practiced polygamy, a tenet which said Reorganized Church of Jesus Christ of Latter Day Saints at least publicly repudiates.

[From Plaintiff's Abstract, 291.]

"Taken in Salt Lake City, Utah, beginning March 16th, 1892.

Wilford Woodruff, of lawful age, being produced, sworn and examined on the part of the defendants, testified as follows:

My name is Wilford Woodruff. I reside in Salt Lake City, Utah. Before I came here I lived at Nauvoo, and stopped at Winter Quarters one season, and came from there here. I may say I came from Nauvoo here.

I am a member of the Church of Jesus Christ of Latter Day Saints. I have been a member of the church about fifty-eight years. When I first became associated with the church, I think the name was the Church of Christ. I became identified first with the church in 1833. I recognize King James's translation of the Holy Bible to be one of the standard books of the church, and acknowledged as authority in the church. I occupy now the position of President of the church in Salt Lake.

The authorized publications of the church are the Bible, the Book of Mormon, and the Book of Doctrine and Covenants. They are the standard works. Of course there are other works that have been published by the church from time to time. I think there is the "Pearl of Great Price." I think that is the name of the book

that has been accepted by the church here in the Valley. I don't remember any other now. The law of tithing, the revelation of 1838, was a law of the church at Nauvoo, Illinois, and is a law of the church of which I am President. The doctrine of baptism for the dead is practiced in the church of which I am now President. The name adopted by the original church established is 1830 was the "Church of Jesus Christ of Latter Day Saints." I don't know whether any action was taken by the church towards endorsing or receiving the revelation of 1838; From my memory I cannot say.

The general rule of the church was that the revelations were given the church through Joseph Smith while he lived, but the rule required that they should be submitted to the quorums of the church before being presented to the church. To what extent they were laid before the quorums I cannot say from memory. In those days I was absent from the church a good deal of the time on my travels. It was not always that I was at the conferences. I will say, however, that the doctrines of the church have been presented at the conferences at various times, but in regard to those revelations being presented, they were always accepted as the law whenever they were presented to the church, or to the people, I should say.

The records of the original church were brought here from the historian's office in Nauvoo; they were brought here and used for many years in the historian's office. Dr. Willard Richards was the historian of the church for a time, and George A. Smith was also church historian, and the church records they made have been made up from the records of the church.

Joseph Smith organized the endowments in the church, and gave endowments the same as has been practiced ever since by the church.

The number of officers and other members of the church that emigrated to the territory of Utah,—you may say they all emigrated in a body. Of course there were some of them who did not come west of the mountains, but I may say that the bulk of the church did.

Joseph Smith of course taught the principle of plural marriage commonly called polygamy, and he not only taught it but practiced it too.

Of course Brigham Young led them as a people from Nauvoo. They followed him from Nauvoo, first to Winter Quarters, and from there to this valley. There were some four thousand came with him to this valley. I don't remember the exact number, but some four or five thousand. They came in '48. I should say some fifteen hunteen or two thousand came through the same season later on. The next season there were two divisions came out here; I don't know the number, but the records will show that. I was connected with the *Times and Seasons* printing office. Brother Taylor and myself published the *Times and Seasons*. I attended to the temporal part of it, and he was the editor.

Extract from Deposition of Wilford Woodruff on Examination in Chief by Defendants. Objections omitted.

Q. Will you state to the reporter, Mr. Woodruff, if what you know—what you know in regard to the principle of plural marriage,

or what is commonly called polygamy, being taught in the Church of Jesus Christ of Latter Day Saints at Nauvoo, either privately or publicly? A. Joseph Smith of course taught that principle while in Nauvoo, and he not only taught it but practiced it, too.

Q. Will you state to the reporter what you know in regard to the fact, if it is a fact, of Joseph Smith's teaching that principle? A. Yes, sir, he taught it.

Q. To whom did he teach it? A. He taught it to the twelve apostles, and to some other individuals. I mean to some other individuals who were not members of the quorum of twelve.

Q. Will you state to the reporter what difference there is, if any, in the doctrines, tenets and beliefs of the Church of Jesus Christ of Latter Day Saints as it exists at the present time in the territory of Utah, and of which you are at the present time the President, and the Church of Jesus Christ of Latter Day Saints as it existed at Nauvoo, Illinois, during the life-time of Joseph Smith, the prophet? A. There is no difference at all. There is no difference in the doctrines taught then and now. There has never been any change in the principles and doctrines of the church since the time it was organized down to the present time that I know any thing of. Nothing in regard to that principle has been changed that I know anything of.

Q. Will you state to the reporter, Mr. Woodruff, what you know in regard to the records of the church being brought to Utah territory; that is the records of the church at Nauvoo being brought to the territory? A. The records were brought here from the historian's office. They were brought here and were used for many years in the historian's office.

Q. Who was the historian here? A. Dr. Willard Richards was the historian of the church for a length of time, and George H. Smith was also the historian, and the church records have been made up from the records of the church.

Q. Will you state to the reporter, Mr. Woodruff, about what proportion of the officers and members of the Church of Jesus Christ of Latter Day Saints at Nauvoo at the time of the breaking of affairs there, emigrated to the territory—that is out here to Utah territory at the time of the migration? A. Well, you may say that they all emigrated as a body. Of course there was some of them did not come west to the mountains, but I may say that the bulk of the church did. Of course Brigham Young led them as a people from Nauvoo, and they followed him from Nauvoo first to Winter Quarters, and from there to this valley. There was some four thousand at first came through with him to this valley—I don't know the exact number, but some four or five thousand I think came here in '48, and quite a number, I should judge some fifteen hundred or two thousand came through the same season or later on. From my memory I could not vouch as to the accuracy of my statements without going to the records, but there were several large companies of the people that followed us the first season, and the next season or summer there was two grand divisions came out here; I don't know the numbers that were in them but the records will show that, but I couldn't tell you from memory how many there was, but all the inhabitants

of the church, I mean the ones at Nauvoo, or all nearly that were at Nauvoo, came here to the mountains. [For cross-examination see plaintiff's abstract.]

From Plaintiff's Abstract. Extract from cross-examination of Joseph Smith, page 83.

"It may be a fact that more of the people who adhered to the church during the time of my father went off with the Salt Lake faction, than afterwards came into the Reorganized Church, but I think more remained behind than went to the valley, I mean Salt Lake Valley.

I can give you some data if you choose to accept it. At the time of the death of Joseph and Hyrum Smith there was something like one hundred and fifty thousand (150,000) or two hundred thousand (200,000) members of the church in America, Europe and the islands of the sea; and there was at Nauvoo and the State adjacent something like twenty-five thousand (25,000); that was the number there then. And in 1850 there was something like fifty thousand (50,000) in Utah territory, and the census of 1880 gives us something like one hundred and forty-three thousand (143,000) as belonging to the entire Utah church that apostatized. Under this showing there is a question whether not there were not more who did not go west but remained behind and became scattered to the four quarters of the globe. All who remained and did not go to Utah have not united with us. There were a great many who went off with different factions, and others who have not united with any faction of the church, but who have dropped out of it altogether. There are other factions of the church that claim succession, just like the one does here at Independence, Missouri.

The Utah church is usually recognized as or by the name of The Church of Jesus Christ of Latter Day Saints. I do not know when that name was first adopted. That is the name of the church that existed at Nauvoo before the death of my father."

Extract from Plaintiff's Abstract of the testimony of James Whitehead on cross-examination by Defendants, pages 30 and 31.

"I took the position of private secretary to Joseph Smith on the eleventh day of June, 1842. Was in the office before that, but not as his secretary. My duties were to keep his correspondence, letter books, and everything of that nature belonging to the office as his secretary. He had a good deal of correspondence. I did not keep the historical records nor the church records. There was a historian for that purpose; William Richards, who lived at Nauvoo, was the historian. James Sloan was Church Historian before William Richards; he is now dead. I do not know whether he went to Salt Lake or not. I think the records were all taken to Salt Lake; I know all the church records that I had anything to do with were taken there; I know they were, because I packed them myself. I was ordered by Joseph Smith's administrator, Mr. Joseph Coolidge, to pack them up. I did so, and delivered them to the "Twelve" according to his instructions.

I stayed at Nauvoo until I had finished up my business with the church, then went to Winter Quarters at Omaha, Nebraska, where Brigham Young and the rest of his followers were. I went

there to make my report to what claimed to be the High Council or "Twelve." I suppose the Twelve went from there to Salt Lake but I did not go with them. I went to Omaha in the fall of 1847; got there in December, and stayed there until early in the following April. I was appointed private secretary of Joseph Smith in 1842, held that position until he was killed, the twenty-seventh day of June, 1844, and had certain records in my possession as private secretary all the time until 1847, when they were turned over by order of Joseph Smith's administrator, to the "Twelve" at Omaha. And at Omaha, in 1847, I helped to repack the church records, and left them in the possession of the "Twelve;" then I returned to Alton, Illinois.

The persons who composed the Twelve at that time, were Brigham Young, Heber C. Kimball, Orson Hyde, George A. Smith, William B. Smith, Wilford Woodruff, Parley Pratt, Orson Pratt, Lyman Wight, J. E. Page, John Taylor and Amasa Lyman. All those persons composing the "Twelve" went to Salt Lake City with Brigham Young, except John E. Page, Lyman Wight, William B. Smith and Amasa Lyman; they refused to follow his leadership."

POLYGAMY.

From Plaintiff's Abstract, page 302, side page 54.

Dep. Wilford Woodruff, cross-examination.

"I undoubtedly know of its being taught in 1841 and 1842. I know that Joseph Smith taught it to certain individuals, but he did not teach it openly to the church. I cannot say that it was in 1841 or 1842. I cannot at this time recollect the exact dates, but it was quite a while before his death that he taught it."

Plaintiff's Abstract, page 92, side page 168.

Deposition of Wm. B. Smith for plaintiffs:

"The first I ever knew of the change in that regard was in 1845 at Nauvoo, Illinois: I refer to the practice of polygamy. The principal participants at that time were Brigham Young, Heber C. Kimball, John Taylor, Willard Richards, Orson Hyde and Parley P. Pratt."

On page 395 same, Jason M. Briggs is quoted as follows:

"I became associated with the William Smith leadership about the first of the year 1851, and continued with him until the next fall. I was with him a little less than a year. My reasons for leaving him were very similar to my reasons for leaving Strang. I got to believe and the branch there got to believe, that he was teaching errors. He claimed subsequent to my first acquaintance with him that it was his right to preside over the church, instead of his standing as a guardian or representative of the rightful heir; and another doctrine was that of polygamy which we considered false and refused to accept.

From same page 313, side pages 92 and 93. All plaintiff's report of Melissa Lott. Willis testimony on part of defendants is as follows:

Melissa Lott Willis, of lawful age, being produced, sworn and examined on the part of the defendants, testified as follows:

"I live at Lehi. Before moving to Lehi I lived here in Salt Lake. Prior to coming to Salt Lake I resided at Nauvoo. I came here the same time that Brigham Young came through here to settle the valley. I came with the emigrants at that time; that was in '48. I am a member of the church of Latter Day Saints. The full name of the church is The Church of Jesus Christ of Latter Day Saints. I became a member when I was fourteen years of age, and now I am sixty-eight. It is over fifty years since I became a member, not far from fifty-four years. I have belonged to it ever since. I lived at Nauvoo a number of years; I cannot state exactly how long we were there. We were there in Nauvoo about '46, I think, as near as I can come at it. The system of plural marriage was taught in Nauvoo the same as it is here in Utah. There is no change.

From plaintiff's cross-examination of same party, the following extract is taken—Page 314.

Q. Did you pass by the name of Melissa Lott Smith in Nauvoo? A. Well, I was called that in Nauvoo by my folks.

Q. By anybody else? A. Well, I can't enumerate everyone that I know of; not expecting to be called on to give these things I did not keep a particular record of it.

Q. What law of the church existed at that time by virtue of which you took the name of Melissa Lott Smith? A. There has never been any change that I knew anything about since I knew anything about the church. I was acquainted with the rules of the church at that time, and have been ever since.

I was acquainted with Joseph Smith. I knew he had a wife living at the time.

His wife was named Emma Smith. I remember young Joseph Smith very well. I had a visit from him not many years ago. I lived at Lehi when he called to see me, the very place I do now.

Yes, sir, I said in my direct examination in answer to the questions from Mr. Hall, that the practice of plural marriage was taught me in Nauvoo by Joseph Smith, and I also said that I was married to Joseph Smith, September 27, 1843. As nearly as I can remember or understand it, the marriage ceremony at the time I married Joseph Smith, is as follows: "You both mutually agree to be each other's companion, husband and wife, observing the legal rights belonging to this condition, that is, keeping yourselves wholly for each other, and from all others during your lives."

Extract from Cross-Examination of Emily D. P. Young by Plaintiff's at Salt Lake City from same Abstract, Page 364

"My father's name was Edward Partridge. I was married to Brigham Young in November, I think, 1854. I was not married in the Temple, because the Temple was not built at that time; it was in process of erection, but it was not finished, so that we could not be married in it. At the time I married Brigham Young, in November, 1844, I was at the same time sealed to Joseph Smith, sealed to him for eternity; I was sealed to Brigham Young for time, and to Joseph Smith for eternity. The manner that I was married

to Brigham Young is what is known as marriage by proxy; that is what I considered it meant; that is, I was sealed to Brigham Young that day, during my natural life, and in eternity I was to be the wife of Joseph Smith. I was not married to Joseph Smith under the revelation on sealing, but I was married to him under the revelation on plural marriage. I was married March, 1843; on the 11th day of March I think it was. I know I was married to him under the revelation of plural marriage. I was married to him on the 11th day of May, 1843.

Q. Now, I would like for you to explain how you were married to Joseph Smith under the plural marriage revelation when the church you belonged to claims that revelation was not given until July, 1843; just tell how you could be married under a revelation in March that was not given until July. A. Well, I do not know anything about that."

Testimony in chief of Lucy W. Kimball, as reported in Plaintiff's Abstract.

Lucy W. Kimball, of lawful age, being produced, sworn, and examined on the part of the defendants, testified as follows:

"I reside in Logan at present; my former home was Salt Lake. Logan is in Cache county, in Utah Territory. Before moving to Salt Lake City I was in Nauvoo; came from Nauvoo to Provo, and then to Salt Lake City. I was a member of the Church of Jesus Christ of Latter Day Saints at Nauvoo; moved there in 1841, came away in 1846. The doctrine of polygamy was taught to me personally in Nauvoo, and I was married to the prophet Joseph Smith. William Clayton performed the ceremony, and I accepted it a special commandment from God.

The marriage was performed on the first day of May, 1843. The only witness to the ceremony was Eliza Partridge."

[For cross-examination see same abstract.]

Plaintiff's abstract, page 343, reports direct examination of Mercy Rachel Thompson as follows:

Mercy Rachel Thompson, of lawful age, being sworn on the part of the defendants, testified as follows:

I reside at 103 North Second street in the city of Salt Lake. Before coming here I lived in Illinois, at Nauvoo. We went there in 1838, and left there in '46, when all the rest did. I think it was about April or May, 1838, when we first went there. It was in the spring anyway.

By Joseph F. Smith—"Allow me to say to refresh your memory that we were driven from Missouri in 1838."

Witness—We left Missouri in 1838; that is, we were driven from there then and we left, I believe, in February, 1839. We went to a place called Commerce, afterwards called Nauvoo, in Illinois, so that I went to Nauvoo in 1839. I was a member of the Mormon church at the time I went to Nauvoo. It was called the Church of Jesus Christ of Latter Day Saints.

While we were living at Nauvoo the principles of polygamy were taught and practiced, of course; that is, it was generally understood that it was. It was taught publicly by Joseph Smith. He gave endowments just the same as we now give in the church here.

Plaintiff Counsel here object to Joseph F. Smith prompting witness.

Direct testimony of witness as taken by the examiner, except objections of Counsel for plaintiff.

Now, on this, the 18th day of March, 1892, at the hour of 9:30 a. m., the same being on Friday, came the parties hereto as aforesaid, and the further taking of the depositions herein was proceeded with, pursuant to adjournment.

Mercy Rachel Thompson, of lawful age, being sworn on the part of the defendants herein, testified as follows, to-wit:

(By agreement of the parties hereto as aforesaid, the deposition of the above named witness was taken at her residence Number 103 North 2nd, west Temple street.)

Direct examination by Mr. Hall:

Q. Mrs. Thompson, where do you live? A. What is that? You will have to speak plainly, for I am very hard of hearing, and I am getting old, too.

Q. I ask you to state to the reporter where you resided at the present time? A. At 103 North Second, west.

Q. In what city? A. In the city of Salt Lake.

Q. What Territory or State? A. In the Territory of Utah Territory.

Q. Where did you live before coming here? A. Before coming here I lived in Illinois.

Q. In what part of Illinois? A. At Nauvoo.

Q. Can you state to the reporter how long you lived there? A. "We went there in '38 and left there in '46, wasn't it—yes, it was in '46 for we left when all the rest did. I went to Nauvoo in '38 and left in '46 when all the rest did, for we all left there, or nearly all of us in '46. That is the time that I believe the Latter Day Saints all left Nauvoo and came out west.

Q. It was in '46 that you left Nauvoo? A. Yes, sir, it was in '46.

Q. Can you state definitely just about the time you went there? A. To Nauvoo?

Q. Yes, ma'am. A. It was in '38. I know it was in '38 that we went there, and as near as I can remember, it was about April or May. It was in the spring, anyway, and I think it was either in April or May, as near as I can remember.

By Mr. Joseph F. Smith—"Allow me to say to refresh your memory that we were driven from Missouri in 1838."

By Mr. Kelley—"Well, I object to your refreshing her memory. She is on the witness stand now, and let her testify to the best of her recollection."

A. We left Missouri in 1838,—that is, we were driven from Missouri then, and we began leaving in February, I think it was, of 1839. You must remember that I am a very old lady now, and I don't remember these things as well as I used to remember them.

By Mr. Hall:

Q. You stated, or, you stated now that you left Missouri in 1839? A. Yes, sir.

Q. Then where did you go to? A. We went to a place at that

time called Commerce, but it was afterwards called Nauvoo, and it was in Illinois.

Q. Now, you say you left Missouri in 1839; about what time was it after you left Missouri that you arrived in Illinois? A. It was in the same year that we left Missouri.

Q. Well, what time in the year would it be that you arrived in Illinois? A. Well, it would be in April or May, as I said before, I can't tell which it was, but it was about that time.

Q. And you moved to a place at that time called Commerce? A. Yes, sir, that was its name at the time that we went there, but after we were there awhile the name was changed to Nauvoo, and that was the name it went by, Nauvoo, as long as we were there, and is yet for all I know to the contrary.

Q. The name of Commerce was changed to Nauvoo after you went there? A. Yes, sir, and that was the name it went by afterwards.

Q. State to the reporter what church, if any, you were a member of at that time? A. I was a member of the Mormon Church.

Q. Can you state what the name of the church was? A. Well, it was the Church of Jesus Christ of Latter Day Saints.

Q. I will ask you to state what you may know in regard to the principle of plural marriage, or as it is sometimes called, polygamy, being taught or practiced in the church at Nauvoo, Illinois, while you were there?

Q. Answer the question, please? A. I don't hear very well and I will have to ask you to ask your question again.

Q. I asked you to state what you knew about the principle of plural marriage, or what is commonly called polygamy, being taught and practiced in the church there at Nauvoo during the time that you were there? A. Well, it was not either taught or practiced until along about '41 or '42, I would not say which, but it was never taught or practiced until about that time. If it was I never heard anything of it at all. If it was practiced before that I never heard anything of it at all.

Q. I don't think you understand the question, Mrs. Thompson; the question is, state what you know about this doctrine of plural marriage, which is sometimes called polygamy, being taught and practiced in the Church of Jesus Christ of Latter Day Saints, while you were living at Nauvoo, Illinois? A. Well, while we were living there, it was taught and practiced, of course; that is, it was generally understood that it was.

Q. Can you give any instance in which you know it was taught and practiced? A. Yes, sir, I certainly can, for the prophet Joseph Smith taught me that principle himself, both publicly and domestically, or privately—that is the domestic circles and I it was being worked. I knew it of my own knowledge, both taught and practiced.

Q. Can you state how you know it was practiced? A. Yes, sir.

Q. Well, do so, please.

Q. I will change the question, and ask you to state to the reporter how you know it was practiced? A. Well, must I say that

I really saw and heard ceremonies to that effect to prove that I know it was practiced, or must I state what I was told plainly and positively by friends, and those who knew positively what they were talking about, and knew all the circumstances, some of whom were living in the practice at the time?

By Mr. E. L. Kelley—"Just state what you know about it of your own knowledge, and that is all."

By Mr. P. P. Kelley—"I move to exclude the last answer of the witness as immaterial and hearsay."

A. Well, the prophet himself told me it was a true principle, and was taught in the bible, the old bible, and I believed it, of course, because I could read it for myself in the bible and see that it was practiced in those days and the Lord approved of it and sanctioned it, and I believed it was right, of course, and believed what the prophet taught me, and he taught me that.

A. I should desire or ask the privilege of having my nephew correct any dates or anything of that kind that I make a mistake in. I am a very old lady now; and my memory is failing me, and I can't remember the dates as I once could.

By Mr. Hall:

Q. State to the reporter whether or not you ever witnessed or were present when any one at all was married as a plural wife to any person or member of the church at Nauvoo?

A. Well, I don't know but what I might say I did, for the real truth is I practiced it myself, and I have no better proof than that, I guess.

Q. Well, that is the best evidence?

By Mr. P. P. Kelley: "We move to exclude the declaration of counsel Hall as incompetent and immaterial."

By Mr. Hall:

Q. State to the reporter whom you were married to as a plural wife?

A. I was married to brother Hyrum Smith.

Q. State to the reporter who performed the ceremony?

A. The prophet Joseph Smith, his brother.

Q. Now you may state to the reporter who it was taught you the principle of plural marriage?

A. The prophet of course. He was the one that introduced it to me, and he was the one that taught the principle of plural marriage to me first, and I heard him teach it to others. He taught it to me I know, and he must to others, for my sister was the first one that came to me and spoke to me about being sealed to Hyrum Smith.

Q. Which sister was it spoke to you?

A. That was my sister Mary that spoke to me about it.

Q. State to the reporter the fact as to whether not you ever saw a paper or document purporting to be a revelation on that subject?

A. Yes, sir, I saw it read, and had it in my possession for quite a little while.

Q. I will ask you to state to the reporter what difference there is, if any, in the revelation which you had and read in Nauvoo, Illi-

nois, and the revelation as it is published now in the Book of Doctrine and Covenants of the church here in Utah?

A. I don't know of any difference at all in it.

Q. Can you state to the reporter the date of your marriage to Mr. Smith?

A. Yes, sir.

Q. What was the date?

A. It was the 11th of August, 1843.

Q. Can you state the names of any of the witnesses that were present?

A. At the time we were married?

Q. Yes, ma'am.

A. They are all dead.

Q. I asked you if you could remember the names of any of the witnesses that were present?

A. Yes, sir.

Q. Who was present?

A. Well my sister of course was present, but she is dead now, and there is no one alive now at all that was present, for they are all dead.

Q. Will you give the name of your sister that was present to the reporter?

A. I have given it before; it was Mary Smith.

Q. Will you state to the reporter whether you lived with Hyrum Smith as his wife, within the meaning of all that the word "wife" implies?

A. Yes, sir. I did.

Well, that is all.

[For cross-examination see plaintiff's abstract, from which the following extracts are taken]:

Q. "State to the reporter whom you were married to as a plural wife.

Objected to as incompetent, irrelevant and immaterial.

A. I was married to Bro. Hyrum Smith.

Q. State to the reporter who performed the ceremony?

Same objection.

A. The Prophet, Joseph Smith, his brother.

* * * * * * * * *

Q. "Now, you were married to Hyrum Smith in August, 1843, you said.

A. Yes, sir.

Q. And lived with him as his wife, did you?

A. Yes, sir.

Q. Or simply as a member of his family, which?

A. I told you before that my sister and I both lived together there as his wives.

James Whitehead, witness for plaintiff, in its abstract on page 32, is reported as testifying:

"The doctrine of Baptism for the Dead was taught at one time under the Presidency of Joseph Smith, and Paul believed in and taught it. I have never heard the Reorganized Church say anything about that doctrine. I am a priest and a preacher in the Reorgan-

ized Church, and I do not know whether the doctrine of Baptism for the Dead has ever been taught in the Reorganized Church. I do not know that it has, but I believe that it has not been taught in it. It is not taught that I know of. It was a doctrine of the church in the days of Joseph the Martyr, but I have never heard it taught in the Reorganized Church. I do not know of its being practiced in the Reorganized Church, and it was not practiced in the original church for a long time before Joseph was killed. The doctrine of the gathering of the Saints I preached in the old church a great many times. It was simply directing the Saints to gather together in holy places and to be true to the doctrine and teaching of the word of God. Holding property in common was not taught in the old church to my knowledge. I have never heard it preached in the Reorganized Church either; and it is not the doctrine of the Reorganized Church.

I never heard the doctrine of holding property in common preached in either church. I have heard the doctrine of polygamy taught, and I hate and despise it. It is a doctrine of the Devil; there is no question about that. I do not believe in it, or countenance it in any way. I heard Brigham Young preach it at Nauvoo, after Joseph Smith was killed. They were preaching the doctrine of polygamy when they left Nauvoo in 1846.

AS TO THE FACTIONS.

Testimony of Joseph Smith, the President of the R. C. O. L.S., reported on pages 88 and 89 of plaintiff's abstract:

I know only from history, when the faction or organization that claims succession to the original church, headed by J. J. Strang, came into existence; the dates are difficult for me to remember; I remember men and faces all right, but it is difficult for me to remember dates. I know the time as I know any other historical fact I read. These factions came into existence very soon after my father's death, possibly in 1844 or 1846; there was a faction known as the "Strangites;" they began organizing at Voree, Wisconsin, and afterwards they went on Beaver Island in Lake Michigan. I cannot give their number, only from hearsay and general observation. I have personal knowledge of one or two branches or churches that are paying allegiance to the faith as taught by Mr. Strang. There are one or two branches in Kansas but I am not sure of the name of the place; there are a number of followers of Mr. Strang in Michigan; they are not organized into branches; some about Coldwater; I do not know how many there are in that organization; they are divided and sub-divided in opinion and location. I do not think there are more than forty or fifty in that branch at Muscotah.

The most of the Cutlerites united with us, but a few of them went into Minnesota, and located at Clitherall. The followers that now remain of the Cutler faction are in Minnesota. The organization headed by Gladden Bishop is dissolved; some of the members remained at Little Sioux, Iowa, and some of them united with us,

and one of the principal men of that faction, J. A. Forgeus, united with us before he died. I do not know how many there was at any one time; I knew Gladden Bishop and J. A. Forges and his family well.

The faction headed by Zadock Brooks went to pieces about Kirtland. Some of them united with us and others left there and went to Texas. I cannot say whether the Brooks faction went to pieces before 1860.

I do not know what became of the faction led by James Colin Brewster; one or two of the members of that faction have united with us, but I do not know them personally; they lived in New Mexico. The Brewster faction does not exist now; it has not been in existence for many years.

The faction led by W. A. Miner, I do not know much about, and never did. I met him, however, in Southern Wisconsin or Northern Illinois, about 1867, and it had no existence then.

The William Bickerton faction split up into different divisions; a part of them remained in Pennsylvania, a part of them went into Kansas; I think there is a portion of them in both places yet, but I do not know how many. The part that is in Kansas still holds to Mr. Bickerton, though he himself has been dismembered from the body.

The faction led by William Smith went to pieces like the rest of them, at Covington and Binghampton, Illinois. A great many of the Smith faction united with us; some of them are still living at different places. That faction does not retain an organization. William Smith, the leader of that faction, united with us, as well as some of the members of the faction he headed. That is my uncle William B. Smith; he belongs to the Reorganized Church, together with a great many of the members of the organization which he led.

The faction headed by Joseph Morris was broken up. Joseph Morris was killed at Weber, Utah. Numbers of the faction that he led have united with us. There are Elder Forscutt, and Samuel Ackerly and a number of others.

The faction led by Sidney Rigdon went to pieces up about Pittsburg, in the Cumberland Valley; the faction does not retain an organization I believe.

The faction led by Lyman Wight, or a part of it, located in Texas.

RE-CROSS EXAMINATION.

I have none of the original minutes, and as to what became of them I am not prepared to say, but they were published in the church papers as they were written, and what became of the original minutes I have no means of knowing. I can say it was simply as assumption of mine, or conclusion, that the records of the original church or minutes of the conferences of the original church were published in the church papers or what purports to be the record of their proceedings. We find a record in the church papers, and it is stated that they are records of the proceedings, with the names of the parties who participated as officers. It is all printed there and signed with their names as officers of the meetings. What we find in the church papers, of course, purports to be

copies of the minutes or records. That is what I mean and what I said.

See also testimony of Joseph Smith, page 59, same.

RULES AND DOCTRINES.

BOOK OF RULES.

See pages 159, 160, 161, plaintiff's abstract.

Testimony of W. W. Blair for plaintiffs. From same cross-examination, page 163, is the following:

"The title page that has been read here by me in answer to your question was the title page of the former work and is the same as before the work was amended, I think; at least it is essentially the same. The old Book of Rules of Order and Debate, the preparation of it began, I think, as early as '76. After that, from time to time, there were some amendments added as they were endorsed by the church at this conference. The Book of Rules, Exhibit number 4, was not published prior to 1844. It was not a book of the church prior to that time; that is, a book authorized by the church prior to 1844. This book, Exhibit number 4, lays down rules of representation for the various branches of the church so far as delegate representation is concerned. It exhibits to us what we deem the best methods by which the voice of the people can be heard before the General Assemblies or Conferences."

Addition by Reorganized Church to the book of Doctrine and Covenants.—History of Joseph Smith, plaintiff's abstract, page 56.

"In 1878 there was an authoritative declaration made by the church authorizing the Board of Publication to insert these later revelations in the Book of Doctrine and Covenants, and ordering the publication. The church was reorganized in 1852, and from 1852 to 1878 used the 1835, 1845, and 1846 editions of the Book of Doctrine and Covenants. They contained all of the revelations that had been authoritatively received by the church up to that time. The revelations given after the publication of 1845, regarded as authoritative by the Reorganized Church were given in 1861, 1863, 1865, 1873, 1882 and 1887.

At first these were not comprised in the Book of Doctrine and Covenants, and were not published until they were accepted and authorized by the church. All that had been received up to 1878 were ordered printed in the book.

Now these revelations given from 1861 to 1882, after they were accepted by the church, became a rule to the church and are authoritative and binding upon the church, as much so as any given prior to June 27, 1844. They were accepted as authority by the church, at least some of them prior to the time of their publication, and were accepted at the time of the revelation, or about that time. In the Book of Doctrine and Covenants that is now the rule of action in the Reorganized Church and binding upon the church, there are certain rules and doctrines that are not found in the original book of Doctrine and Covenants published in 1835, 1845 and 1846, which references have been made in my examination, nor are they found in any book published before 1835 and 1836, that I know any-

thing about. The part to be found in the Book of Doctrine and Covenants now used and held as authority in the Reorganized Church that is not found in the editions of 1835, 1845 and 1846, is simply revelations given in 1861 and thereafter: they have been adopted by the church, but all other matters contained in these books are substantially the same."

On page 71 same testimony of same.

"I do not know what governed the individual opinion of the other parties who joined in this movement with me; I do not know what their motives may have been. The persons who effected the reorganization in 1852 affirmed that they were directed by revelation; but whether they were or not is a matter for them to testify to, and not for me; that is their testimony and not mine.

In respect to uniting with the Reorganized Church; I was led by revelation. If the affirmations of the people who recognized the church in 1852 are correct, it was reorganized in pursuance of revelation; that is what they say, but, of course, I cannot testify as to that. This is a matter that I am not a competent witness to prove.

I cannot tell you how you can ascertain whether they were deceived or not. I cannot tell you how you can ascertain whether I was deceived in uniting with the reorganization."

On page 76 from same, testimony on same.

"Revelations received are not binding on the church, nor do they become a law or rules of action for the church until they have been formally adopted by the body; when they are accepted by the church, then they become binding upon it. Yes, sir, it is a law of the Reorganized Church that new revelations may be given and accepted by the church, and thereby become law to the church. Yes, sir, that is done under our declaration of faith. We believe that God has revealed himself in times past, that he does reveal himself, and will continue to reveal himself to men upon this earth whenever such revelations are needed according to his divine judgment. We believe this because we know it to be so, and we therefore look for future revelations in the future at such times and places and through such instrumentalities as He sees fit to make the medium of his communication to this earth."

Q. Now you have presented here, or your counsel has for you, several books for you to identify, and one of them is, I believe, what is called the "Inspired Translation of the Bible?" A. Yes, sir.

Q. Will you please state wherein it differs from the original translation of the bible? A. I could not tell you; there are a great many variations.

Q. Then it differs from what is commonly known as the "King James" translation of the bible?

Q. Well, I want the question answered; he can answer it or not as he pleases. A. What is the question?

Q. The question is whether the inspired translation of the bible presented here, differs from the old translation, generally called the "King James" translation of the bible? A. I answered that it did.

Q. Then they differ? A. Yes, sir.

Q. In many respects? A. Yes, sir.
Q. In many material respects? A. Yes, sir.
Q. When was this translation made?
Q. You may answer the question if you understand it. A. I understand it; all that I know about that is what I gather from history.

Q. Well, what do you mean? A. Well, sir, I mean that my information is that it was commenced some time in '30 and finished in '33.

Q. When was it published? A. In 1867.

Q. Since that time has it been a law of the church? A. I do not know exactly how to apply your question. I will say, however, that it has been accepted by the church, and is now one of the standard books of the church.

Q. It has been accepted by what church? A. The Reorganized Church of Christ of Latter Day Saints.

Q. Was that book ever accepted by the old original church prior to 1844? A. I don't know that it was.

Q. Well, do you know that it was not? A. I could not tell you. That would be before my time, and I could not say.

Q. It is not your historical understanding that it was? A. I have never seen the fact that it was accepted by the old church in history that I know of.

Q. Well, now, from what history did you get your information that it was begun in 1833? A. I did not say that it was begun in '33.

Q. Well, so that that matter may be clear I will ask you to state again when it was begun and finished? Well, it was along about 1829 or '30 and from that up to about '33 or somewhere along there, and it was finished according to the statement made in the history in 1833.

Q. Is that a reliable history? A. I could not tell you that.

Q. But you state distinctly that it did not become a rule of action or book of recognized authority in the church, the Reorganized Church, until what date? A. It was authorized. A committee was appointed and authorized to procure this publication, and I think it was published in 1867, but I would not say positively that it was published at any particular time at first, for I don't remember the exact date that it was published.

Q. Well, has it since been recognized as one of the official works of the church? A. It is and has been recognized as one of the standard works of the church.

Q. By which the church is to be guided in its doctrines? A. Yes, sir, in connection with the King James translation, and in connection with the book of Mormon and the book of doctrine and covenants. It becomes simply one of the standard books of the church according to what it purports to be.

From testimony of Joseph Smith in rebuttal, by plaintiff, cross-examination, page 153. (Objections omitted.)

Q. Are you able to state now whether the inspired translation was adopted by the Reorganized Church? A. I don't know that it

was specifically. It may possibly have been in the fall of '79, but I could not say positively as to that.

Q. May I call your attention to what purports to have been a resolution, I will say what purports to be a resolution adopted by the general conference of the church on September 13th, 1879—'78 I mean?

Q. Read that. (Objections.)

Q. Well, read the resolution that was adopted in 1878. (Objections.)

Q. Well, read the resolution which appears on page eighteen of "Exhibit M," offered by the plaintiff.

A. "Resolved, That this body, representing the Reorganized Church of Jesus Christ of Latter Day Saints, recognize the Holy Scriptures, the Book of Mormon, the revelations of God contained in the Book of Doctrine and Covenants, and all other revelations which have been or shall be revealed through God's appointed prophet, which have been or may be hereafter accepted by the church as the standard of authority on all matters of church government and doctrine, and the final standard of reference on appeal in all controversies arising, or which may arise, in the Church of Christ."

Further, on page 159:

Q. Is it a fact that you do not regard the inspired translation as a revelation? A. We regard it, and take it for just what it purports to be—a correction and translation of the old and new testament by the Spirit of Inspiration by Joseph Smith, and place it side by side with the Book of Mormon and the Covenants.

Q. Do you consider it infallible? A. No, sir.

Q. Do you not consider the Bible to be infallible? A. No, sir.

Q. Then you do not consider the Bible to be infallible? A. No sir, we do not consider anything that passes through human hands to be infallible. We do not even hold the laws of the State of Missouri to be infallible. We do not believe in the plenary inspiration of the Bible, and therefore we do not believe it to be infallible.

but it finally went to pieces, so to speak. It became scattered and a great many of them came into Iowa and united with us. Lyman Wight's sons are with us, or a part of them, and one of them lives in Missouri, and is a member of our organization, along with his family. Lyman Wight's widow united with us, and also his grand-children.

The William McClellan faction was located, I believe, at Kirtland, Ohio. They published a paper there at all events. The last I knew of McClellan he lived here, at Independence, Missouri.

There was a faction led by Granville Hedrick, located at first, as I understood it, at Bloomington, Illinois. Mr. Hedrick published a paper there a portion of the time; I believe it was in 1864. I never got acquainted with the organization, though I knew a number of the party. I met Mr. Hedrick several times, and others who were members of the organization of which he was a leader.

RE-CROSS-EXAMINATION.

I have not attempted to give the specific dates at which these different organizations were formed. I do not know the dates and did not pretend to give them, but I stated it was between the death of Joseph Smith. That is subsequent to his death in 1844 and down to 1852; I think some of them were before 1852. I would not be positive that some of them were not after 1852. Yes, sir, I presume it is a fact that the Reorganized Church was about as weak or weaker than some of the other organizations; I do not know that to be a fact, I state I presume it was; I do not know that it was a fact. I say again that I presume that is a fact as far as numbers are concerned. It was comparatively weak until 1860, but it was gathering strength all the time, however. At the time I became connected with it, I expect there were probably three hundred (300) in the membership; I think that was about the number that were identified with it then; that was in 1860. There may have been more; I cannot say. There were some thousands belonging to it in 1870; we had built some church buildings; there were possibly five thousand (5,000) in 1870; there may have been more than that number, and there may not have been that many. If I had the statistics I could tell you just how many there were. Yes, sir, I have stated that after the organization of what is now called the Reorganized Church, that quite a number of the adherents of other bodies came into the Reorganized Church. That is true of my own knowledge.

I say that the members of some of them came in, and a large proportion of them came in. These persons who came into the Reorganized Church, who were members of these different factions, who were baptized prior to my father's death, were received on their original baptism upon their request to be so received, and if they required rebaptism they were rebaptized; but it was not required of them; if they desired they were received on their original baptism as members of the church.

Yes, sir; I have stated that William B. Smith was one of the Twelve in my father's day; he was ordained by the church that existed under my father's presidency, that was the Church of Jesus Christ of Latter Day Saints. I did not say that he went off with one of these factions; I said that he had organized or helped organize a faction, claiming to represent the church. When he was received into the Reorganized Church his former ordination as an apostle was not recognized. He was received as a high priest. We received him as a high priest in the right of the body to direct in regard to its officers, and in a sense we recognized his former ordination. I do not know that William B. Smith was ever ordained an apostle; that is a matter of history I believe; I do not know what the history says.

REORGANIZED CHURCH—OF WHOM COMPOSED.

From Plaintiff's Abstract, pages 165 and 166.

Henry A. Stebbins, of lawful age, being produced, sworn and examined, testified as follows in chief, on the part of the Complainants:

My name is Henry A. Stebbins. I live in Lamoni, Iowa. Have lived there ten (or eleven) years last November. I am Secretary and Recorder of the Church of Jesus Christ of Latter Day Saints, and also a minister in the church,—the present church in this case. I have been Secretary and Recorder in the Complainant church, in which my testimony is now being taken, since April, 1874.

The number of different churches, or branches of the church, existing in the United States is about four hundred, besides about one hundred and fifty that are more or less in a disorganized condition by reason of removals or departure of officers for other locations; but about four hundred are now existing as organized bodies with officers and holding regular sessions or meetings. Approximately I know about the membership in the United States. It is from twenty-two to twenty-five thousand.

I know about the number of the principal officers of the original church organization, founded in 1830, who afterwards united with the reorganization. My knowledge is derived from personal acquaintance and with the records of the church. From knowledge I have received from various sources there were a great many who had belonged to the original church at Nauvoo that united with the reorganization. There was the president of the stake at Nauvoo, one of the Quorum of Twelve, at least twenty-one of the High Priests, eighteen of the Quorum of Seventy, at least from two hundred to three hundred and perhaps more of the elders, to say nothing of the lesser priesthood as they are called—priests, teachers and deacons. So far as my acquaintance or knowledge goes, of course I don't profess to have full knowledge, except from the records and the knowledge that has come to me in connection with my official relations with the church, from correspondence, etc., also by individual information, I think it would be safe to say that from three to five thousand persons who were formerly members of the original church, afterwards became members of the Reorganized Church, that is to say, from three thousand to five thousand of the members who belonged to the original church united with the reorganization from 1853 down to the present time. I will say further that they are still uniting with the Reorganized Church. There may have been more than that, but I do not wish to state with any greater degree of certainty than that. That is my judgment from my acquaintance with the records, and from correspondence I have had.

INCORPORATION OF COMPLAINT.

Respondents answer and say: "That they have no knowledge or information that the said complainant, styled The Reorganized Church of Jesus Christ of Latter Day Saints was incorporated under

the laws of the State of Illinois, on this——day of October, 1872, or afterwards on the——day of June, 1891, it was duly or at all incorporated under the laws of the State of Iowa and on that ground deny it and leave the complainant to its proof. Respondents say, that though said incorporation exist as alleged by plaintiff it has no valid authority to own and control the property which it seeks to obtain from defendants; that said State of Iowa could not confer such authority over real estate in the State of Missouri upon a corporation for the promotion of the tenets of a confessedly religious organization, and that whatever incorporation has, if any, purporting to confer such authority is null and void in so far as it may be invoked to recover the property sought by this action. And that the allegations of plaintiff's bill show that plaintiff is not a proper or necessary party thereto, and that there is a defect of parties plaintiff to which defendant here takes exception on account of which plaintiff ought not to recover in its action.

Amended answer, plaintiff's abstract, page 12:

Complainants omit the following allegation of the amended answer, to-wit: Defendants deny that the State of Iowa or the State of Illinois has any power to confer or did confer upon complainant any right or power to hold or control real property for church purposes or any purpose in the State of Missouri, and that such alleged corporation is authorized to take control of or exercise any authority or power over the property which it seeks to recover from defendant, and substitutes therefor the last thirteen lines, second paragraph of answer on page 12, above.

Extract from the testimony of Joseph Smith, President of the Reorganized Church, &c., on cross-examination as to the incorporation:

Q. Mr. Smith, I believe you are one of the incorporators of the plaintiff in this case? A. Yes, sir.

Q. Where do those incorporators reside? A. Well, I believe the most of them reside there at Lamoni, Iowa.

Q. Most of them reside there at Lamoni? A. Yes, sir.

Q. Well, if there are any of the incorporators that do not reside at Lamoni, Iowa, where do they reside? A. Well, sir, I could not tell you.

Q. It there no way by which that fact can be ascertained? A. I could not tell you without examining the names.

Well, please examine the names and state where they all reside, each and every one of them if you know? A. (Witness takes the copy of the articles of incorporation attached hereto as Exhibit A, and answers as follows): E. L. Kelley resides at Lamoni, B. F. Nicholson at Lamoni, W. W. Blair at Lamoni, Iowa, Robert Winning resides at St. Joseph, Missouri, Alexander Hale Smith resides at Lamoni, Iowa, Robert M. Elvin resides at Lamoni, Iowa, C. H. Burroughs resides at Lamoni, Iowa, D. F. Crane also resides at Lamoni, Iowa, Jasper H. VanMeter at Lamoni, Iowa, Edwin B. Stafford at Lamoni, Iowa, S. D. Shippy resides at Lamoni, Iowa, D. D. Young at Lamoni, Iowa, S. P. Bass at Lamoni, Ed Weedmark at Lamoni, A. K. Anderson at Lamoni, Seth M. Bass at Lamoni, Geo. Derry at Lamoni, J. B. VanMeter now lives at

Kellerton, Iowa, that is a place five or six miles west of Lamoni; William Anderson at Lamoni, John Traxler at Lamoni, Emeline A. Elvin at Lamoni, Minnie A. Anderson at Lamoni, Samuel Ackerly at Lamoni, J. P. Dillon at Lamoni, Ekin Lovell at Lamoni, David Dancer at Lamoni, Edwin A. Blakesly at Galien, Mich., Asa S. Cochrane at Lamoni, Joseph Smith at Lamoni, F. M. Smith at Lamoni, and Henry A. Stebbins also at Lamoni; that is all of them, I believe.

Q. Did these people, whose names you have read, and whose residences you have given, incorporate by authority; did they incorporate of their own free will and accord, or by authority conferred upon them?

Counsel for the plaintiff objects to the question asked the witness on the ground and for the reasons that the same is irrelevant and immaterial, is improper cross-examination, and is not the best evidence of the fact sought to be proven.

Q. What is your answer? A. What is the question?

Q. Did these people incorporate of their own accord, and if not upon or under what authority did they incorporate? A. They incorporated of their own accord by direction of a General Conference, or by permission or instruction of a General Conference of the church.

Q. What General Conference? Will you please point it out to me? A. I think it is in there (referring to the articles of incorporation.)

Q. What I want to know is what General Conference it was that gave this permission, or direction, or authority, whichever it was? A. I think it was the spring conference of 1890, but I am not sure of that. I would not be positive as to that, but I think that was the conference it was.

Q. Have you the minutes of that conference here? A. I do not know whether they are here or not. I haven't them I know.

Q. Well in that action were these parties whose names appear written here, authorized by name to incorporate? No sir, they were not.

Q. Why was that not done? A. Well, sir, it was not necessary. The majority of them were residents and living there at Lamoni, and were members of the church or branch there, and they were there present at the meeting at the time this incorporation took place, and signed the articles of incorporation.

Q. At what meeting was that? A. The meeting held there at Lamoni for that purpose.

Q. At a meeting of the local church or branch at that place? A. Yes, sir, of the local organization.

Q. They met for that purpose? A. Yes, sir.

Q. Were they authorized by that meeting to incorporate? A. They proceeded to adopt the articles of incorporation at that meeting and signed them at that meeting, and I believe that every member that was present at that meeting signed them.

Q. How was that meeting called? A. It was a regular meeting of the branch.

Q. What do you mean when you say a regular meeting of the

branch? A. I mean a meeting of the branch that is held at regular intervals: a regular fixed meeting, the time of the holding of which is fixed. It is a meeting that is held for the transaction of the regular routine business of the branch.

Q. When was this meeting called? A. Saturday afternoon; Saturday evening. It was a stated meeting, and notification had been given of what would take place.

Q. It was assembled by the members of that local branch at Lamoni? A. Yes sir.

Q. And a resolution was passed at that meeting authorizing these gentlemen to effect this incorporation, did they not? A. No sir, that was done by the conference, but the articles of incorporation were presented to the meeting and were debated by the meeting, approved and signed. The people did that.

Q. What people? A. Those present.

Q. Well, were those names that appear here the names of the people who were present and who signed these articles of incorporation? A. Yes sir.

Q. Was there anybody else present except those who did sign the articles of incorporation? A. Not that I know of. I think every person present signed them.

Extracts from Secretary Stebbins' testimony, page 165, plaintiff's abstract.

I recognize page 56 of Exhibit number 5 as a part of the record of the conference of 1891 held at Kirtland, Ohio. It is entitled the Re incorporation of the Church, and reads: "The subject of the reincorporation of the church was taken up, and the following was moved and adopted: That a committee of three be appointed to prepare articles of incorporation in harmony and in conformity with the present incorporation under the laws of the State of Illinois, the same to be used to further incorporate the society in the State of Iowa and other States by vote of any large branch or stake in such States as provided by the laws of the same." President Blair appointed as committee, Brethren Joseph Smith, E. L. Kelley and Robert Winning.

BISHOP KELLEY ON THE INCORPORATION.

Plaintiff's abstract reports on cross-examination of E. L. Kelley by defendants, pages 235, 236, 237, 238, 239, as follows:

CROSS-EXAMINATION.

Yes, sir, I testified that I was Bishop of the Church; I am Bishop of the Reorganized Church of Jesus Christ of Latter Day Saints; that is the name of the church of which I am the Bishop. I am the Bishop of the church of that name, and the church has been incorporated under the laws of the State of Iowa.

Q. Are you Bishop of a corporation? Yes or no will answer that question. A. I am Bishop of the church.

Q. I would like you to answer the question as to whether you are the Bishop of a corporation? A. I have answered the question; I simply state the facts to you, and you can draw your own conclusions.

Q. So you want the notary there to note that you refuse to answer, Yes or No, to the question I have asked you. Is that the way you want your answer to be recorded? A. I want my answer to be recorded that I state the facts, but I am not here to give my conclusions as I understand it.

Q. Well, I must again request you to answer the question as to whether or not you are the Bishop of a corporation entitled "The Reorganized Church of Jesus Christ of Latter Day Saints." Now, you either are or are not, and I ask for an answer to that question. What is your answer to that question? A. I am willing to answer just what I am. I am willing to answer any question you may put to me, by giving you the facts in connection with the question if it is in my power to do so.

Q. Well, I have asked you that question, and I want you to answer it. A. My position is that of Presiding Bishop of "The Reorganized Church of Jesus Christ of Latter Day Saints," and the church as a society was incorporated after I became its Presiding Bishop, in this manner, under the operation of the laws of the State of Iowa.

Q. I repeat the question, are you the Bishop of a corporation? A. I am Bishop of the church, and the church is duly incorporated under the laws of Iowa, and if that makes me the Bishop of a corporation, then I am the Bishop of a corporation, and if it does not, then I am not the Bishop of a corporation. I do the business for the church and the church is incorporated, and as such you might call me the agent of the incorporation.

Yes, sir, the church has the necessary officers provided for in its articles of incorporation, the church officers are its officers, and no others. The officers are those that are mentioned in the articles of incorporation, and provided for by the laws and regulations of the church which is incorporated.

The corporation does not have directors and officers outside the church officers, it has those specified in the articles of incorporation, in so far as it is stated in the articles of incorporation, the officers that are therein specified are entitled to do the business.

This paper, Exhibit 20, purporting to be a certified copy of a deed came into my possession I think it was the same day that it was made here in Independence, the 11th day of June, 1887, and has been in my possession ever since. I was then acting agent for the church in a different capacity, however, but I came into possession of the paper at that time, and have retained its custody ever since. At that time I was not the Bishop of the church. Local organizations like the one here at Independence, Missouri, are sometimes called local churches, and sometimes they are called branches of the church. I could not tell you how many branches there are of my own knowledge without referring to the records,

I know about how many there are generally; there are about four hundred in the United States. I could give an approximate idea of about how many there were in the world; I think in the Canadas there are about twenty or twenty-five, but I do not know with reference to Australia, or the Society or Sandwich Islands, or

Europe either. Personally I am not in a position to tell you the number with any degree of accuracy.

The property of the local branches of the church in Canada is held in part by local trustees, and my instruction has been to the officers there in deeding property to have it deeded directly to the church in its corporate name, as we claim we could and can so hold it by the recognized laws of comity between the two countries in its corporate name.

I would not say for certain that the property here in Independence is in the name of the bishop; I know that it is not in my name, but it may be in the name of the former Bishop of the church, for at the time it was deeded G. A. Blakeslee, of Galien, Michigan, was the Bishop, and it is possible that it is in his name, but I think it was in the name of the Reorganized Church of Jesus Christ of Latter Day Saints. If you wish to know definitely you can ascertain the fact by examining the records.

The titles to a number of the local churches run to Israel L. Rogers, as the trustee and Bishop, when he was the Bishop of the church. That was before the society was ever incorporated and after the appointment of Bishop Blakeslee, some of the deeds run to him as Bishop and trustee, and some were directed to the church in its corporate name, and so it has been since my appointment. There are none legally held in any other way at all, not that I know of.

There are special regulations with reference to property of these branches of the church. It is held for the use and benefit of the society, so long as the society holds together. I mean that the local society, and so long as it is in harmony with the laws of the church. If it should happen that the local society for any reason should depart from the church, the general society would not lose its interest in the property. All this property is brought together, and obtained by the use of the money of the church, and this is where the interest of the general church comes in.

Yes, sir, the general church has an interest in the property of a local branch besides the benefit for the local branch itself. Often the general church aids these societies in building, loans them money, and aids them in various ways. It is owing, in a great measure, to the conditions, whether the loans made to the local churches by the general church is to be repaid. Title to church property is held by the Bishop for the use and benefit of the general church, that is such property as is deeded to the Bishop in trust.

Yes, sir, there is a law of the church giving the Bishop power to sell property; the law is simply what you find in the articles of incorporation already introduced in evidence in this case.

Yes, sir, speaking of the General Conference as the church generally, it does hold property generally; that is, in the sense of holding property other than church buildings. Yes, sir, they hold real estate and personal property, too. It holds it for the use and benefit of the church generally. The general church has church buildings. The building at Kirtland, Ohio, the temple building there at Kirtland, Ohio, is held by the general church, and it is the best and most costly building held by the society. It has other real estate and personal property.

It has one hundred and sixty acres of land in Missouri. It holds the Temple Lot in question in this case, and several other lots here in Independence. Holds one lot just north of the Temple Lot, here in question in Independence, and in a good many other places it holds property. It holds a block in the center of San Bernardino, California, and it holds two lots in Pomona, California. It holds all of it for the use and benefit of the Reorganized Church of Jesus Christ of Latter Day Saints, and it is so stated in the deeds. The church holds property for any and every purpose or use the society may see fit to put it to.

Yes, sir, but it is not expected that the church would go into speculation, and if the Bishop would go into that kind of business he would be dismissed, for he is not permitted to go into the speculative business. Whatever the Bishop does with any of this property is approved by the incorporation. The way the corporation approves, is by or through the church which is incorporated. The action of the Bishop in any of these matters is not as a matter of course approved of; they are liable to be inquired into at any time, for committees are appointed to examine my books and accounts, papers and reports, and I report all the real and personal property at each Annual Conference of the society.

I make my report to the church. I report to this incorporation at Lamoni; yes, sir, for it is the church at Lamoni. The church at Lamoni is the incorporation, and it was duly incorporated by the laws of Iowa, and as such an incorporation I report to it by reporting to the church. The church at Lamoni is the principal church in this incorporation, but this incorporation is not the church at Lamoni alone, for it includes in the society other branches of the church at other places, and as the officer having charge of these things I report to the general association of the church. I reported this present month at the General Conference that was held here at Independence, Missouri.

I am acting here in this case as a representative of the church which incorporated. Both the church and the incorporation are one and is the same thing, and if you want to make a distinction you can do so, but I state to you the fact, the laws of Iowa, as I understand them, make no distinction. In my proceedings here at this conference, and the capacity in which I appeared, I represented the incorporation or the church. The muniments of title to the property of the church are in my possession as an officer of the corporation.

I again answer that I am the Bishop of the Reorganized Church of Jesus Christ of Latter Day Saints, which is incorporated under the laws of Iowa, and if that makes me an officer of a corporation I am one. I believe we observe the laws under which the church is incorporated. I have told you what we do, and it is for the Court to decide that question.

The incorporation was not effected at the time I came into possession of Exhibit 20; at that time the society was incorporated under and by virtue of the laws of the state of Illinois. I have not transferred the possession of this deed, Exhibit 20, to the possession of this incorporation at Lamoni, for the reason that the incorporation was transferred to Iowa; the re-incorporation transferred me from

the incorporation in Illinois to the corporation in Iowa, and I took this deed with me as a matter of course.

I was one of the parties incorporating at Lamoni, and we re-incorporated the society, and the effects belonging to the original incorporation, by that act of re-incorporation were duly made the effects of the incorporation at Lamoni. There was no act of mine transferring to the incorporation at Lamoni, any paper, or muniments of title to real estate, or otherwise except as I have stated, and it was not necessary so to do under the laws of the State of Iowa. So far as the taking the property out of the one hand and putting in another, so to speak, that was never done.

The Bishop is the treasurer of the incorporation, he is the treasurer of the church, and as such he is the treasurer of the incorporation. It has no secretary except the Secretary of the Church. The church has a secretary and as the church is incorporated, he is of necessity the secretary of the incorporation.

LAWS OF IOWA.

For the laws of Iowa, on which the incorporation is based, see pages 279, 280, 281, 282 of plaintiff's abstract.

Not in equity:

And the said respondents submit to the Honorable Court that all and every of the matters in the said complainant's bill mentioned and complained of are matters which may be tried and determined as law, and with respect to which the said complainant is not entitled to any relief from a court of equity and these respondents hope that they shall have the same benefit of this defense as if they had demurred to said bill of complaint.

Proof: Amended bill, page 6, Plaintiff's Abstract:

"And your orator further shows unto your honors that it is the owner in fee-simple, by title absolute of the following described real estate lying and situate in the town, now city of Independence, Missouri, namely: Lots 15, 16, 17, 18, 19, 20, 21, 22, and the triangular strip north of and adjoining said lot 15, all in Woodson & Maxwell's addition to the said town, now city, of Independence, and known as the Temple lot and is entitled to immediate possession thereof, as well as to the rents, profits and the free enjoyment of said possession and ownership without let or hinderance by the defendants or any of them, and yet the said defendants have, by unlawful means, entered into possesssion of said property, and the whole thereof, and refuse to surrender the possession of the same to your orator, although such possession has been promptly demanded and as often denied."

GENERAL DENIAL.

Answer, page 11, plaintiff's abstract.

The said respondents now and at all times hereinafter reserving all means of benfit and advantage of exception to the many errors and insufficiences in said title contained, for answer thereto or unto so much or such parts thereof as these respondents are advised are material for them to make answer unto, they answer and say, &c.

PRAYER OF AMENDED BILL: "And that upon final hearing "your orator may have a decree declaring the and reciting that the "said real estate, and the whole thereof, belongs to, and is the "property of your orator, free and clear of all rights, claims and "interests of the defendants, or any of them; and for such other "and further relief as the equities of the case may require and to "your Honors may seem meet."

And these respondents deny all unlawful combinations in said bill charged, without this, that any other matter or thing material for them to make answer to and not herein sufficiently answered, avoided, or denied is true to the knowledge or belief of the respondents, and which matters and things these said respondents are ready to aver and prove as this court shall direct, and prays to be hence dismissed with their reasonable costs and charges in this behalf most wrongfully sustained.

JOHN N. SOUTHERN,
Solicitor for Respondents.
JAS. O. BROADHEAD,
Of Counsel.

INDEX.

DEFENSE I—Page 5 to 33.

P. A. Refers to Plaintiff's Abstract.

RECORD TITLE OF DEFENDANTS.

PAGE.

Admission of Amended Bill, P. A.....7
" as to Proof and Original Deeds.....7
" as to date of Record of Deeds.....57
" as to Location of Property.....57
" as to Transfer from U. S. 63 A to Jones Flournoy.....—
" as to Transfer of same from Flournoy to Edward Partridge, P. A. 234
" as to Death of Edward Partridge, P. A.....6 and 363
" as to Heirs of Edward Partridge, P. A.....6
Partridge Heirs to James Poole, 63A.....7-8
Poole to John Maxwell, 63A.....8-9
Woods, Yeatman et al vs. James Poole.....10-14
Poole, by Sheriff, to Maxwell.....12-13
Lemmel Edwards to Samuel H. Woodson, 63A.....13-14
Woodson & Maxwell's Addition, part same.....14-17
Plat, Woodson & Maxwell's Addition.....61
Woodson vs. Maxwell Heirs, Partition.....8-10 and 15-17
Lots in Controversy in Woodson & Maxwell's Addition, P. A.....6
Admission by Plaintiff's.....57-58
Lots Fenced, P. A.....174-175, 424, 448 and 450
Lots Numbered 15 to 22.....57
Transfers to Defendants Admitted, P. A.....14-20
Defendant's Chain of Title, P. A.....12-19
Deeds to Lots in Woodson & Maxwell's Addition Offered.....17-32
Sheriff to Heirs of John Kelly, Lot 16.....20-22
Heirs of Kelley to John H. Hedrick, Lot 16.....28-29
Sheriff to John Montgomery, Lot 20.....21-23
Montgomery to John H. Hedrick, Lot 20.....29
Sheriff to Thos. Swope, Lot 21.....24-25
Swope to J. Tindall, Lot 21.....25-26
J. Tindall to John H. Hedrick, Lot 21.....26

John H. Hedrick and wife Lots 16, 20 and 21 to G. Hedrick.....29-30
Sheriff to Jos. C. Irwin, Lots 17, 18, 19 and 22.....23-25
Irwin to Wm. Eaton, Lots 17, 18, 19 and 22.....26
Sheriff to Woodson, Lot 15.....15-16
Woodson to Kean, Lot 15.....27
Kean to Wm. Eaton, Lot 15.....27
Eaton to Granville Hedrick, Lots 17, 18, 19 and 22.....30-31
Authentication, &c.....32

DEFENSE II—Page 33 to 39.

IN TRUST FOR THE CHURCH OF CHRIST.

Pleadings.....34-35
Defendant Name same as Old Church, P. A.....94
Hedrickites and Church of Christ Identified.....36 P. A. 134-135
Hedrickites in 1857.....36-39; 40-41; P. A. 136-137

DEFENSE III—Page 39 to 81.

ADVERSE POSSESSION.

Tax Receipts Identified.....35-39
Work Done.....50-54
Tax Receipts as Exhibits.....54-55
Of other Land in same Tract.....58-59, 60-61
Lots Assessed.....57
Re-offer of Tax Receipts.....57
Identification of Property.....58-62
Plats of Additions on Property.....62
The 63A Occupied.....61-81

DEFENSE IV—Page 81 to 95.

PLAINTIFF'S CHURCH NOT IN SUCCESSION.

Nauvoo Church and Salt Lake Church same.....82-86
Records Taken to Salt Lake.....83-84, 85-93
Name the same.....105, P. A. 105
The same Membership.....84-85
Same Baptism, James Whitehead.....92
Principle of Revelation same.....82-83
Plural Marriage same.....83
Polygamy same at Nauvoo as at Salt Lake.....86-93, P. A. 455, 503, 505

DEFENSE V—Page 98.

FACTIONAL.

The Reorganized Church and the Factions.....93-95
.....P. A. 88-89, 105, 207, 213-214, 407-408
Different Rules of Order and Doctrine.....95, P. A. 159-163

New Revelation.....95–97, P. A. 69, 71, 127, 130–131, 153, 205
A New Bible.....96–98, P. A. 399
Principle of Incorporation.....P. A. 163–164
New Name.....P. A. 68, 104

DEFENSE VI—Page 101 to 105.

ALLEGED INCORPORATION OF COMPLAINANT.
Pleadings.....100–101, P. A. 6, 12
Residence of Incorporators.....101–102
Alleged Authority to Incorporate.....103, P. A. 153–164, 236–238
Alleged Law authorizing Incorporation.....P. A. 279–282
Bishop of a Corporation.....103–105
General Church and Branch Ownerships.....105

DEFENSE VII.

Action at Law.....107

DEFENSE VIII.

General Denial.....108

2001 In the Circuit Court of the United States for the Western Division of the Western District of Missouri.

STATEMENT OF CASE.

The Re-Organized Church of Jesus Christ of Latter Day Saints
vs.
The Church of Christ et al.

This a bill in equity to declare a trust in favor of the complainant, a religious body, as to certain real estate, situate in Independence, County of Jackson, State of Missouri, known as the "Temple Lot." The controversy is between two divisions of what is popularly known as the "Mormon Church."

The lot in controversy was bought in 1832 by one Partridge, Bishop of the then Church of Jesus Christ of Latter Day Saints, with its central organization at Kirtland, Ohio, with funds furnished by said Church for such purpose. In the view of the Church this spot was to be the future site on which was to be erected the great Temple of the Church, and was to be to it the New Jerusalem.

In 1839 said Partridge made the following deed declaratory of said trust:

Know all men, that whereas, there was money put in my hands, to-wit, in the hands of Edward Partridge by Oliver Cowdery, an elder in the Church of Latter Day Saints, formerly of Kirtland, State of Ohio, for the purpose of entering lands in the State of Missouri, in the name of and for the benefit of said Church, and whereas I, Edward Partridge, was Bishop of and in said Church he took said money and funds thus put in his hands and entered
2002 the land in his own name, in the County of Jackson, State of Missouri, in the name of Edward Partridge, the signer of this deed.

"Now know ye, for the furthering the ends of justice, and as I have to leave the State of Missouri, by order of Governor Boggs, and with me also our Church, I do for the sum of one thousand dollars to me in hand paid by said Oliver Cowdery, do give, grant, bargain and sell, to John Cowdery, son of Oliver Cowdery now seven years old; and Jane Cowdery three years, and Joseph Smith Cowdery, one year old, all the lands entered in my name in the County of Jackson, in the District of Lexington, in the State of Missouri, said Edward Partridge, the first party and signer of this deed does also sell, alien and confirm to the aforesaid John Cowdery all the real estate and lands he has both entered as aforesaid, and all he owns in his own name by private purchase and holds by deed of gift, being intended for the use of the Church of Latter Day Saints or otherwise. This sale is to embrace all lots of all sizes, situated in Independence and to embrace the lot known as the Temple Lot, and all other lands of whatever description said Partridge the first party is entitled to in said Jackson County in the State of Missouri. Said Partridge also agrees to amend this deed to said Oliver Cowdery at any time for the purposes aforesaid.

Given under my hand and seal on the date above written.

EDWARD PARTRIDGE, [Seal]

E. G. GATES, Witness.

State of Missouri,
Caldwell County—ss.

"Be it remembered that on the 25th day of March, 1839, before me, the undersigned one of the Justice of the County Court in and for said County, came Edward Partridge, who is personally
2003 known to me to be the same person whose name is subscribed to the foregoing instrument of writing as party thereto, and did acknowledge the same to be his act and deed for the purposes therein mentioned.

In testimony whereof, I have hereunto set my hand and affixed my private seal on the day and year above written.

ELIAS HIGBEE, J. C. C. C."

"The foregoing deed with the acknowledgment thereon from Edward Partridge to Jane Cowdery et al., was filed and duly recorded in my office on the 7th day of February, A. D. 1870.

A. COMINGO, Recorder,
By H. G. GOODMAN, Deputy."

Partridge left the State about that time and died in 1841. One Poole who lived at Independence, Missouri, in 1848 hunted up the heirs, five in number, of said Partridge, in the State of Iowa, and obtained from three of them a purported deed to the 63 acres of land at Independence, so deeded by said Partridge, to Oliver Cowdery, including the Temple Lot, which lot contains about two and one-half acres.

The said trust deed from Partridge was not put on record in said Jackson County, Missouri, until 1870. Other mesne conveyances of this property were made under the Poole deed.

The lot in question remained vacant and unoccupied until 1882, when the respondent church took possession of it claiming title thereto under deeds made to one Hedrick in trust for the respondent church, and by adverse possession. This action was brought within ten years after respondent took possession of the property.

The evidence in the case tends to show that the said grantees under the Partridge deed died during their minority, and that one Marie Louise Johnson is the sole surviving sister and heir of said Cowdery children. On the 9th day of June, 1887, she and her husband, Charles Johnson, executed and delivered a deed of quit claim to said lot to George A. Blakeslee, Bishop of the complainant church, in trust for the benefit of said church; which deed was duly acknowledged on the 9th day of June, 1887, and filed for record on the 10th day of June, 1887, in the Recorder's office of Jackson County, Missouri.

The complainant church was thereafter duly incorporated under the laws of the State of Iowa. The other important facts of the case will sufficiently appear from the opinion herein.

2004 OPINION.

Phillip, J.

I.

Question is made, at the threshold of this case, as to the power of the complaining corporation to maintain this suit. The broad

proposition is asserted that a foreign corporation has no right, under the laws of Missouri, to hold or own real estate in the State. Under the statutes of Iowa, where complainant was incorporated, most liberal and plenary provisions are made for the incorporation of all manner of beneficient, charitable and religious associations. (Chap. 2. Title 9. p. 275, Iowa Stat.) Section 1095 provides that "Any three or more persons of full age, citizens of the United States, a majority of whom shall be citizens of this State, who desire to associate themselves for benevolent, charitable, religious or missionary purposes, may make, sign, and acknowledge before" a prescribed officer, "and have recorded in the office of Recorder of the county in which the business of such society is to be conducted, a certificate in writing, etc., in which shall be stated the name or title by which such society shall be known, the particular business and objects of such society, the number of trustees, directors, etc."

Section 1096 declares that upon the filing for record of such certificate, the persons so signing and their associates and successors, "shall by virtue hereof be a body politic and corporate, — and by that name they and their successors shall and may have succession, and shall be persons capable of suing and being sued, and may have and use a common seal, etc., and they and their successors by their corporate name shall be capable of taking, receiving, purchasing and holding real and personal estate."

2005 Section 1097 provides that such religious associations may nominate and appoint such trustees, directors or managers for the corporation, "according to the usages of the appointing body, etc."

Section 1101 declares that, "any corporation formed under this chapter shall be capable of taking, holding or receiving property by virtue of any devise or bequest contained in any last will or testament." And the only limitation imposed by this statute upon the power of such incorporation to take and hold property is contained in the last clause of the last named section, which declares that, "No person leaving a wife, child or parent, shall devise or bequeath —more than one-fourth of his estate after the payment of debts."

Section 1102 declares that the trustees, etc., of existing religious corporations may, by conforming to the requirements of said section 1095 "re-incorporate themselves or continue their existing corporate powers, and all the property and effects of such existing corporation shall vest in and belong to the corporation so re-incorporated or continued."

This association was incorporated in conformity to this statute. But it is insisted by respondents that the mere incorporation of the religious association did not have the effect, ipso facto, to vest the property of the church in the corporation, so as to authorize the legal entity to sue therefor. The case of Catholic Church vs. Tobein, 82 Mo. 418, is relied on. Tobein by his will devised the property "to the Catholic Church at the city of Lexington, Missouri." Afterward said church was incorporated under the General Statutes. It was held that as the devise was to the church and took effect before the act of incorporation, the mere fact of an incorporation by

State of Missouri,
Caldwell County—ss.

"Be it remembered that on the 25th day of March, 1839, before me, the undersigned one of the Justice of the County Court in and for said County, came Edward Partridge, who is personally
2003 known to me to be the same person whose name is subscribed to the foregoing instrument of writing as party thereto, and did acknowledge the same to be his act and deed for the purposes therein mentioned.

In testimony whereof, I have hereunto set my hand and affixed my private seal on the day and year above written.

ELIAS HIGBEE, J. C. C. C."

"The foregoing deed with the acknowledgment thereon from Edward Partridge to Jane Cowdery et al., was filed and duly recorded in my office on the 7th day of February, A. D. 1870.

A. COMINGO, Recorder,
By H. G. GOODMAN, Deputy."

Partridge left the State about that time and died in 1841. One Poole who lived at Independence, Missouri, in 1848 hunted up the heirs, five in number, of said Partridge, in the State of Iowa, and obtained from three of them a purported deed to the 63 acres of land at Independence, so deeded by said Partridge, to Oliver Cowdery, including the Temple Lot, which lot contains about two and one-half acres.

The said trust deed from Partridge was not put on record in said Jackson County, Missouri, until 1870. Other mesne conveyances of this property were made under the Poole deed.

The lot in question remained vacant and unoccupied until 1882, when the respondent church took possession of it claiming title thereto under deeds made to one Hedrick in trust for the respondent church, and by adverse possession. This action was brought within ten years after respondent took possession of the property.

The evidence in the case tends to show that the said grantees under the Partridge deed died during their minority, and that one Marie Louise Johnson is the sole surviving sister and heir of said Cowdery children. On the 9th day of June, 1887, she and her husband, Charles Johnson, executed and delivered a deed of quit claim to said lot to George A. Blakeslee, Bishop of the complainant church, in trust for the benefit of said church; which deed was duly acknowledged on the 9th day of June, 1887, and filed for record on the 10th day of June, 1887, in the Recorder's office of Jackson County, Missouri.

The complainant church was thereafter duly incorporated under the laws of the State of Iowa. The other important facts of the case will sufficiently appear from the opinion herein.

2004 OPINION.

Phillip, J.

I.

Question is made, at the threshold of this case, as to the power of the complaining corporation to maintain this suit. The broad

proposition is asserted that a foreign corporation has no right, under the laws of Missouri, to hold or own real estate in the State. Under the statutes of Iowa, where complainant was incorporated, most liberal and plenary provisions are made for the incorporation of all manner of beneficient, charitable and religious associations. (Chap. 2. Title 9. p. 275, Iowa Stat.) Section 1095 provides that "Any three or more persons of full age, citizens of the United States, a majority of whom shall be citizens of this State, who desire to associate themselves for benevolent, charitable, religious or missionary purposes, may make, sign, and acknowledge before" a prescribed officer, "and have recorded in the office of Recorder of the county in which the business of such society is to be conducted, a certificate in writing, etc., in which shall be stated the name or title by which such society shall be known, the particular business and objects of such society, the number of trustees, directors, etc."

Section 1096 declares that upon the filing for record of such certificate, the persons so signing and their associates and successors, "shall by virtue hereof be a body politic and corporate, — and by that name they and their successors shall and may have succession, and shall be persons capable of suing and being sued, and may have and use a common seal, etc., and they and their successors by their corporate name shall be capable of taking, receiving, purchasing and holding real and personal estate."

2005 Section 1097 provides that such religious associations may nominate and appoint such trustees, directors or managers for the corporation, "according to the usages of the appointing body, etc."

Section 1101 declares that, "any corporation formed under this chapter shall be capable of taking, holding or receiving property by virtue of any devise or bequest contained in any last will or testament." And the only limitation imposed by this statute upon the power of such incorporation to take and hold property is contained in the last clause of the last named section, which declares that, "No person leaving a wife, child or parent, shall devise or bequeath —more than one-fourth of his estate after the payment of debts."

Section 1102 declares that the trustees, etc., of existing religious corporations may, by conforming to the requirements of said section 1095 "re-incorporate themselves or continue their existing corporate powers, and all the property and effects of such existing corporation shall vest in and belong to the corporation so re-incorporated or continued."

This association was incorporated in conformity to this statute. But it is insisted by respondents that the mere incorporation of the religious association did not have the effect, ipso facto, to vest the property of the church in the corporation, so as to authorize the legal entity to sue therefor. The case of Catholic Church vs. Tobein, 82 Mo. 418, is relied on. Tobein by his will devised the property "to the Catholic Church at the city of Lexington, Missouri." Afterward said church was incorporated under the General Statutes. It was held that as the devise was to the church and took effect before the act of incorporation, the mere fact of an incorporation by

that name, without more, did not have the effect to transfer to the corporation the property devised to the church, as such, any more than if the incorporators had taken some other name; citing the case of Frank vs. Drenkham, 76 Mo. 508, as "directly in point." In the latter case, the conveyance was to a number of individuals, directors of a voluntary joint stock association, "and their successors in office in special trust for the use of the shareholders in said company." Afterward the members of said company were incorporated by act of the Legislature under the name of the "St. Louis and Birmingham Iron Company." Under judgment obtained against the corporation this property was sold, and ejectment was brought predicated of the sheriff's deed. The court held that as no transfer was shown from the grantees in the deed, or from the shareholders in the joint stock company to the corporation, there was nothing to show succession of right in the corporation of the property. But the case here is essentially different.

2006

The theory of the complainant is that this property was acquired originally with church funds, and was and is held in trust for the use of the Church of Jesus Christ of Latter Day Saints, which later took the name of the "Re-organized Church of Jesus Christ of Latter Day Saints." This church, according to its ecclesiastical polity, rules and system of government, at its annual General Conference, April 6th, 1891, directed and authorized the articles of association and incorporation. This conference represented the ecclesiastical body in its entirety. And as stated in the deposition of Bishop Kelley, "The Church at Lamoni, (Iowa), effected the articles of incorporation because that is the central church and all others are simply branches of that church. It is the headquarters, the principal place of business; and was made the principal place of business by the common consent of the body, which is the rule of action of the body."

The articles of association were presented to, voted on and adopted by the authorized delegates of the church. By the sixth article of which it is provided: that,

2007

"All property now held or owned by said church in the name of any person or persons, as trustees or otherwise, including the publication establishment at Plano, Illinois, shall vest in said corporation; and all persons holding such property in trust, for said church, are hereby directed and required to transfer and convey the same to said corporation as the property of said church; and said corporation shall by operation of law succeed to all property now owned by said church or held for its use, and may sue and recover the same in the name of said corporation."

This was the act of transfer of the equitable interest of the members of the church association—the beneficiaries of the trust estate—to the corporation. Such religious bodies are sui generis; and this was the only method by which this equity could be conferred upon the incorporators, by articles in writing, duly adopted and attested at its church meeting. This equity being held by the incorporators, it certainly was competent for them in adopting the articles of incorporation, to provide and declare, as they did in the sixth article

thereof, that the property held or owned by the church in the name of any person or persons, as trustees or otherwise, should vest in said corporation.

II.

I understand the law of comity to be well established that a corporation of one State, if not forbidden by its charter, may exert its powers in any other State of the Union, so as to take and hold real estate therein, unless interdicted by the positive law or declared policy of such other State. Wright vs. Lee, 51 N. W. Rep., 706; same case, 55 N. W. Rep., 931; Barnes vs. Suddard, 117 Ill., 227.

This question was fully considered and settled in the
2008 case of American and Foreign Union vs. Yount, 101 U. S., 352; see also Lancaster vs. Amsterdam, Imp. Co. (N. Y. Court of App.), 35 N. E. Rep., 964.

The respondents invoke section 8 article 2 of the State Constitution of Missouri, for the position that a foreign corporation has no right to hold, or own lands in this State. Said section is as follows:

"That no religious corporation can be established in this State, except such as may be created under a general law, for the purpose of only of holding the title to such real estate as may be prescribed by law for church edifices, parsonages and cemeteries."

This is not inhibitory of the existence of religious corporations in this State; nor is it a denial of their right to hold real estate. It simply limits their creation to "a general law," conformably with another specific provision of the constitution prohibiting special legislation, and restricts such corporations to the purpose of holding title to real estate for church edifices, parsonages and cemeteries. Its purpose was and is to prevent the incorporation of such bodies for the purpose of acquiring real estate for other purpose or use than the reasonable requirements for the prescribed purposes.

The fact that the Legislature of the State has not prescribed the maximum limit of the quantity of real estate to be held by such corporations gives no color to the contention that the State has refused to recognize the right of foreign religious corporations to hold property or transact business within the limits of the State (Cowell vs. Springs, 100 U. S., 59-60; Stephens vs. Pratt, 101 Ill., 206; Thompson vs. Waters, 25 Mich., 224; Merrick vs. Van Santvoordt, 34 N. Y., 221).

But the State statute, Art. 10, G. S. 1889, authorizes
2009 the incorporation of such religious bodies or associations, and in a spirit of marked public liberality. Sec. 2825 provides that "Any association, congregation, society or church organization formed for religious purposes, and any association formed to provide or maintain a cemetery, - and in general any association, society company or organization which tends to the public advantage in relation to any or several of the objects above enumerated, and whatever is incident to such objects, may be created a body corporate and politic by complying with sections 2821 and 2822."

Section 2828 declares: corporations may be formed, under the provisions of this article, to execute any trust, the purpose whereof is within the purview of this article, and may receive and take, by deed

or devise, in their corporate capacity, any property, real and personal, for the use and purposes of such trust, and execute the trust so created."

Section 2833 provides that, "any corporation, the purposes whereof are included in section 2825 hereof, may acquire and hold in his own name such real estate and buildings as may be necessary for assembly, library, laboratory and other rooms requisite for its purposes, and may receive income from such other rooms as may be requisite to the completeness of such buildings; but such income shall be applied to the purpose of such corporation as defined in section 2825." And section 2835 makes specific provisions for a proceeding by quo warranto for inquiring into any misuser of the franchise of such corporation.

The property in question was originally acquired by an agent of this church for the purpose of erecting thereon a temple designed to be the New Jerusalem of this religious order, from which the eyes and yearning desires of this people, through sixty years of exile and wandering, have never been turned nor diverted. To them it
2010 has been as the New Jerusalem to the Israelite and as Mecca to the Moslem. For 62 years it has been known to this sect and the people of Western Missouri, as the "Temple Lot," on which, in the fullness of time, and the fulfillment of prophecy, was to be erected a splendid temple for the gathering of the believers for religious worship and exaltation.

Whether the two and a half acres contained in this lot be more than is necessary for the erection of such temple, is a question the court would not undertake to determine in this collateral proceeding. Such question belongs to the State. Lancaster vs. Amsterdam Imp. Co. supra; R. R. Co. vs. Lewis, 53 Iowa, 101–113; National Bank vs. Mathews, 98 U. S. 621; Chambers vs. St. Louis, 29 Mo. 576; Land vs. Coffman, 50 Mo. 252; Cowell vs. Springs Co., 100 U. S. 56; Jones vs. Habersham, 2 Sup. Ct. Rep. 336.

"The acts of a foreign corporation which has not complied with the requirements of the constitution and laws of the State in relation to such corporations transacting business, owning and disposing of property, – are not void and unenforcible; and said foreign corporation can only in a direct proceeding by the State be prevented from exercising its franchise within the State until it has complied with the constitution and the laws." Wright vs. Lee, 51 N. W. Rep. 706; and in the same case, 55 N. W. Rep. 931, the Supreme Court of Dakota hold that "Although transacting business in this State by such non-complying foreign corporation is a usurpation of power by such corporation, with the State rests the right to elect whether it will acquiesce in such usurpation, or dispute and prevent it.

III.

Was this property in its acquisition impressed with a trust in favor of said church? As both parties claim under Edward Partridge, both are precluded from invoking any other source of title and it is
2011 only necessary to enquire into the character of his tenure.

Although the deed to Partridge did not on its face express any trust estate, the legal title may be impressed with a use for a

third person by evidence *aliunde*. That he bought this property with funds contributed by members of the church and held the title in recognition of the trust, is too clear to my mind to admit of debate. In the first place its acquisition by him was in fulfillment of the revealed will of God, as as accepted by him as a member of the church, in the Book of Doctrine and Covenants. He was a Bishop of the Central Church then at Kirtland, Ohio. As such, he looked after its temporalities. After such a lapse of time it may be difficult to find this and that witness to testify to placing so much money in his hands. But the substantive facts appear in this case in persuasive clearness. The stress of this religious sect's environments rendered it expedient that they should seek asylum in the then remote west, where, as they supposed, unvexed by those who despitefully used them, they might tabernacle in peace. Witnesses testify to the fact of making contributions to this fund and to the common notoriety of raising the money for this purpose. It was discussed in the public assemblies, and report was made to the church showing that $3,000 had been raised for this purpose. And Bishop Partridge came to Independence, Missouri, to acquire lands for the Temple, and settlement of the people of his religion. From the day of the acquisition of this property by Partridge, he, and his church, to the day of his death, in 1841, recognized this lot as church property. It was known as the "Temple Lot." Proof conclusive of this issue is furnished in the fact that Joseph Smith, the founder and head of the church, its recognized Prophet and Seer, himself came to Missouri, and in 1832 held religious services on this site, and solemnly dedicated it
2012 as the spot where the Temple was to rise and shine. Partridge himself participated in this ceremony. And to "make assurance doubly sure" Partridge, on the eve of the expulsion of himself and the people of his church from the State by military force, at the command of the Governor, in 1839, made a deed, embracing this property to the minor children of Oliver Cowdery, his co-worker in the church and companion in misfortune; in which he recited the fact that "there was money put in my hands by Oliver Cowdery, an elder in the Church of Latter Day Saints, formerly of Kirtland, Ohio, for the purpose of entering the lands in the State of Missouri, in the name and for the benefit of said Church." This, no doubt, from the evidence, was the money placed in his hands and reported to the church at Kirtland, Ohio.

IV.

This deed of Partridge to the Cowdery children is assailed on various grounds. It is objected that there is not sufficient evidence of its delivery. The deed proper bears no date, but it was acknowledged on the 25th day of March, 1839. Presumptively it was executed prior thereto, or contemporaneously therewith. Under the ruling of the State Supreme Court, the presumption is that the deed was delivered the day of the acknowledgment. Fontain vs. Boatmen Savings Inst. 57 Mo. 552. It is also the settled rule of the State, that the recording of a deed, duly acknowledged, is presumptive evidence of delivery. Kane vs. McKown, 55 Mo. 198.

There is also in this case other reasonable presumptions of de-

livery. The evidence shows that Partridge and his flock were in 1839, in peril. They fled under military menace from Caldwell County in this State. Filled with apprehension and uncertainty, and anxious for the execution of his sacred trust respecting this property, he fell upon the plan of declaring the trust in this deed, and of making the children of Oliver Cowdery, his tried friend and an elder in the church, the depositaries of the title, believing, no
2013 doubt, that on account of their tender years they would be less exposed to violence and harm, and that on account of their training in the church, they would be worthy and faithful trustees. [It] is therefore, reasonable to conclude that he delivered the deed to some one of them, or to some one for them, before fleeing the State. It is quite inferable, from all the facts and circumstances in evidence, that these children died in their minority. (Presumptions in equity should be more liberally indulged after such a long lapse of time, where the loss of witnesses by death and removals and disappearance often render direct proof impossible.

The recording act of the State statute during this period prescribed no time, inter partes within which a deed should be admitted to record. The writer of this opinion sought unsuccessfully as counsel in Sappington vs. Oechsli et al., 49 Mo. 244, to have the court, on general principles of equity as to third parties giving credit to the ostensible owner of the fee on the faith thereof, hold that a deed should be recorded at least within a reasonable time.

Even had there been no actual delivery of this deed, there is high authority on sound principle, for holding that where a trustee, in order to secure a trust obligation, makes a deed, even to himself as trustee, regularly executed, except recording it, and dies leaving the deed among his papers, it will bind the land effectually as a declaration of trust, and it would be sufficiently delivered for such purpose. Carson et al. vs. Phelps et al., 40 Md. 73.

The State statute, section 4860 authorizes a copy of such recorded deed to be read in evidence, although not recorded within one year after execution, "upon proof of such facts and circumstances
2014 as, together with certificate of acknowledgment or proof shall satisfy the court that the person who executed the instrument is the person therein named as grantor." Aside from the circumstances already recited, the evidence shows that the grantor lived in Caldwell County, Missouri, where the acknowledgment purports to have been taken. He was a conspicuous character there, and naturally enough was known to the county judge, who himself, was a member of the grantor's church. The law always presumes that a public officer does his duty. It is therefore to be presumed that the recorder of Jackson County, in admitting the deed to record, inspected it, and was satisfied of its original character. I therefore admit the deed in evidence.

V.

This deed clearly enough declares a specific trust for the church. The criticisms made by counsel in this connection, are strained. They do violence to the declared honest purpose of the grantor. It is contended for instance, that the description of the land is uncer-

tain. After other particularities, the deed concludes as follows: The sale is to embrace all lots of all sizes situated in Independence, and to embrace the lot known as the Temple Lot, and all other lands of whatever description said Partridge, the first party, is entitled to in Jackson County, in the State of Missouri." The "Temple Lot" was thus not only susceptible of ascertainment and identification, but the evidence shows it was as well known to the people of Independence as the public square.

It is next suggested that the grantor acknowledged in this deed the receipt of $1,000 from Oliver Cowdery as purchase money for the land; and that this discharged the land from the trust as the Church presumably received the benefit of the money and it can not both hold the money and the land. This, it seems to me is a
2015 non sequitur. If Oliver Cowdery in fact saw fit to pay Partridge $1,000 to so convey the land in trust, how does that destroy the existence of the trust, even if it had been made to appear by the evidence (which it does not) that Partridge turned the money over to the church? But the deed taken in its entirety, shows clearly enough that the meaning of this acknowledgment was not that the grantor was then receiving $1,000 from Cowdery, but it is to be read and undstood in connection with the opening sentence of the instrument, which declared that said Cowdery, as Elder of the Church, had put money in the grantor's hands. Cowdery knew as well as any living man that the "Temple Lot" had been bought by Partridge for the Church, and that Partridge had come to Missouri as the Bishop and agent of the Church, to acquire lands for its benefit and use. The deed shows on its face that it was very inartificially drawn, but shows throughout the purpose of the grantor to secure this property to the Church. It winds up with the significant sentence, "Said Partridge also agrees to amend this deed to said Oliver Cowdery at any time for the purposes aforesaid."

VI.

The respondents claim title first, through a deed of conveyance from three out of five of the heirs of Edward Partridge, and second by adverse possession. As the basis of the record title they offered in evidence a certified copy from the Recorder's office of Jackson County, of what purports to be a deed from three of said heirs, of date May 5th, 1848, to one James Poole. The first objection to this deed, is that it was not acknowledged properly. The point of this objection is that the Clerk of the Circuit Court certified the acknowledgment under his private seal, there being no seal of the court provided. By section 16, page 221, title Conveyances, Statute
2016 of 1845, in force when this acknowledgment was taken, it is provided that, "Every instrument in writing whereby any real estate is conveyed, or my be effected in law or equity, shall be acknowledged or proved and certified in the manner hereinafter prescribed."

Section 19 prescribed that such certificate shall be "when granted by a court, under the seal of the court; when granted by the clerk of the court, under the hand of the clerk and seal of the court of

which he is clerk; when granted by an officer who has a seal of office, under the hand and official seal of such officer; when granted by an officer who has no seal of office under the hand of such officer."

The language of the statute is too clear for debate, that when the clerk of the court takes an acknowledgment it must be "under the seal of the court of which he is clerk." A justice of the peace was authorized to take acknowledgments of deeds, and he could certify without such seal of office. He was the "officer" doubtless, in the mind of the legislature.

As a persuasive legislative interpretation of the correctness of this conclusion, the same statute, section 20, page 332, provides when the clerk may use his private seal, and that is in the instance of the "authentication of any record, process or proceeding, re-required by law to be authenticated by the seal of this court." As a deed is neither a record, process nor proceeding, this statute has no reference to the acknowledgment of deeds. Sections 4892 and 4893 R. S. 1889, making deeds recorded thirty years evidence, does not help the infirmity. In the first place said section 4892 applies only to the instance of a deed "executed and acknowledged in conformity with the provisions of any law in force in this State—at the time of its execution and acknowledgment;" and then it is only admitted without further proof of the execution thereof, and of course
2017 has reference to the instance where the original deed is offered in evidence. The latter section applies to the case of the admissibility of a copy, including "the certificate of acknowledgment;" but the copy is admissible only "when it shall be shown to the court by oath or affidavit of the party wishing to use the same, or of any one knowing the fact, that such instrument is lost or not within the power of the party wishing to use the same." Crispin vs. Hannavan, 72 Mo. 548. No such proof respecting the loss of the original was offered by the respondent.

Section 4869 of the same chapter, which pertains merely to the matter of the execution of a deed, being an act in pari materia, must be construed in connection with the above sections of the statutes in order to avoid palpable absurdity and contradiction. It was never designed by the Legislature to apply to the instance of a recorded deed without acknowledgment. This provision appeared in the Revised Statute of 1855 section 58, p. 733. Judge Scott, a recognized authority, without a superior in the State, in expounding statute law, in Garnier vs. Barry, 28 Mo., 449-50, the first case in which the construction of this statute was presented to the Supreme Court expressly held that it did not apply to an imperfectly acknowledged deed. He said, "If the deed was not properly recorded for the want of the necessary certificate of the identity of the grantor, then it was not recorded within the meaning of the section, and it is as though the deed had not been put upon the record." And this decision further holds that it should be made to affirmatively appear that the parties setting up such deed made claim of title or enjoyment thereunder. The respondents case would be bad even in this latter respect. Any contrary adjudication of this statute is a mere inadvertence, into which the ablest jurist will at times fall.
2018 As already suggested, sections 4892-93 would have been mere

surplusage if the Legislature intended any deed whether acknowledged or not, and the copy thereof could be read in evidence after appearing of record ten years, if only any person made claim thereunder. Courts have no power, by mere construction to nullify statutes that are constitutional and consistent.

Section 4864 cannot avail the respondents in this case. That section makes the record of a deed made "one year before this law takes effect—neither proved or acknowledged" notice thereof to all subsequent purchasers or encumbrancers.

This provision in substance first appeared in the session acts of 1847, section 8, p. 95, and it was carried into the statute of 1855, section 46, p. 731. It had application only to a deed recorded prior to the enactment. Bishop vs. Schneider, 46 Mo., 473. As the Poole deed was not obtained until 1848 it did not apply to it. The statute of 1855 and subsequent similar statutes were a mere continuation of the act of the General Assembly of 1847, and therefore had no reference to a deed not recorded prior to 1847. Bishop vs Schneider, 46 Mo., 473; Campbell vs. Laclede Gas Company, 84 Mo., 352. That statute was repealed in 1887 (Session Acts 1887, p. 183, Section 1), and in lieu thereof said section 4864 was enacted. Its only effect is to impart notice by such record to subsequent purchasers and does not affect a bona fide title or right, like that under the Partridge deed made in 1839 and recorded in 1870. Gatewood vs. Hart, 58 Mo., 261.

A yet more fatal objection to this deed as a valid conveyance against the unrecorded deed from Partridge of 1839 is the fact that no evidence whatever was offered tending to show that Poole paid a valuable consideration for this deed, or that any subsequent purchaser paid any valuable consideration. To constitute an innocent purchaser in such case it is not sufficient that it should ap-
2019 pear that a deed was executed, but proof must go further and show affirmatively that a valuable consideration was paid, and that too before the prior deed was placed of record The recital of the receipt of alleged purchase money in the deed is not sufficient proof of the payment of the purchase money as against third parties. Simmons Creek Coal Company vs. Doran, 142 U. S , 417–537, and cases cited. Bishop vs. Schneider et al., 46 Mo., 473. Sylloman vs. King, 36 Ia., 207–213.

The respondents next reply upon ten years adverse possession of this property. Conceding that the Poole deed and others following thereon, constituted a color of title, there must be joined with it adverse possession. Avery vs. Adams, 69 Mo., 603. Such possession must not only be adverse, but it must be unbroken for a period of ten consecutive years. Moore vs. Harris, 91 Mo., 617. Olwine vs. Holman, 23 Pa. State, 279; Malloy vs. Burden, 86 N. C., 25. The statute of this State, section 6768, is but expressive of the better common law rule, that a possession of a part of a tract of land under color of title, to extend to other lands not actually occupied, must be in the name of the whole tract claimed, coupled with the exercise of usual acts of ownership, over the whole tract claimed.

The evidence in this case shows that about 1851 Woodson and Maxwell platted about one-fourth lying north of Walnut street—of

the 63 acre tract laying it out into streets, and alleys and lots, which included the "Temple Lot;" and it may be conceded to respondents that a part of this 63 acres outside of the Temple Lot was fenced and perhaps some of the lots sold; but it is not sufficient that a party under a colorable deed should occupy one lot where a tract is divided up into lots with separate streets, and acquire title by limitation to a lot not connected and not occupied by merely claiming title thereto. The segregation of the land into
2020 parcels and distinct lots with dividing streets broke the continuity of the tract of 63 acres, and necessitated some open visible acts of ownership over each parcel. Leeper vs. Baker, 68 Mo., 402.

It is too clear for debate that this Temple Lot, in controversy was never fenced nor occupied until these respondents entered in 1882 and began to put a wire fence around it. It is true there are some witnesses who testify to mere impressions about a fence being somewhere about this lot in 1847. If so it was not put there by Poole, or any one claiming under him. The statements of these witnesses are entirely too indefinite and conjectural to predicate an adverse holding thereon. It is not sufficient that improvement should be shown to have been on or about the lot. It must appear affirmatively that they were made "by a party claiming adversely" and it must be continuous for ten years. Doolittle vs. Tice, 41 Barb. 181.

The platting of the land into lots and streets was an act of ownership, but as the streets lay outside of the Temple Lot little importance can be attached to that, unless followed up with some visible acts of dominion over that lot. The mere payment of taxes by separate parties on separate lots without more, did not amount to an adverse holding. Chapman vs. Templeton, 53 Mo. 465. Raymond vs. Morrison, 59, Ia. 371. McDermott vs. Huffman, 70 Pa. State, 131.

It does not appear that Maxwell who bought from Pool, in 1848, did any act of ownership on this property outside of the fact that he and Woodson, by some arrangement not disclosed in the evidence, laid off the tract of 63 acres into lots and streets about 1851. It next appears from a decree made in the Circuit Court of Jackson County, in 1859, that Woodson claimed to have made a contract of purchase with Maxwell for that portion of the tract lying south of Walnut street, which did not embrace the Temple Lot.
2021 Maxwell died in 1856. So he could not have held possession for ten years; and there is no evidence of any possessory act by his heirs or any one else under him. The suit of Woodson was against the heirs of Maxwell in a partition proceeding. And how the court got into the decree therein made in 1859, any part of the Temple Lot against the express finding that Woodson had bought from Maxwell only the land south of the street running south of the Temple Lot is inexplicable. That part of the decree was a mere brutum fulmen. Recitations made in the partition proceedings and deeds are not binding on strangers. Warren vs. Syme, 7 W. Va. 474.

No deeds were made under this partition sale until 1867. During

all this time there is nothing shown to satisfy the mind of the Court, of a single act of ownership over a foot of the Temple Lot. About the time of the making of these deeds, under the partition proceedings, one J. R. Hedrick began to buy up these lots in the interest of Granville Hedrick, President for the defendant church, in trust for said church, who as it will appear hereafter, had notice of the trust on said Temple Lot, and did not take actual possession thereof until 12 years after the trust deed from Partridge was put on record, and without taking steps to remove said cloud on the title.

VIII.

Even if the Poole deed were admitted in evidence, it would only affect three-fifths of the lot, and it is impossible to reasonably escape the conclusion that he and all the parties claiming under him had notice of the trust character of the Temple Lot.

It is a wise rule, predicated of sound public policy, and nearly always promotive of the ends of justice, announced by the Supreme Court in Benoist vs. Darby, 12 Mo. 206:

"Where particular knowledge of the fact is sought to be brought home to a party, evidence of the general reputation and be-
2022 lief of the existence of that fact among his neighbors, is admissible to the jury as tending to show that he also had knowledge as well as they. It is next to impossibility in very many cases, to fix a positive knowledge of a fact upon an individual, notwithstanding the interest he may have in being correcty informed, and doubtless is informed thereof, and we cannot see the injustice of permitting a party to raise a presumption of knowledge in such case by showing that the community are informed on the subject, and hence the party interested may also have similar knowledge."

Courts will take judicial notice of matters of public history. They will also admit for the purpose of notice a matter of local history on proof aliunde tending to show its truth. The appearance and location of the Mormons, so-called, at Independence, Missouri, and the selection of the Temple Lot was as notorious in Western Missouri as the famous "Order No. XI." of the late Civil War.

The local community was stirred to its depths with intensest excitement over the fact of the proposed erection on this site of the central temple of this sect as their New Jerusalem, and the gathering around it on the contigious 63 acres of the Believers. It led to open armed hostilities between them and the Gentiles. The testimony of quite a number of old residents gentlemen of the highest character, as well as the testimony of many of respondent's witnesses, show indisputably that this lot was generally known and recognized in that community as the "Temple Lot." Its public dedication as such, by Joseph Smith the founder, Prophet and Seer of the Church, was itself an event so noteworthy, that it is incredible that it should not have been known, and been long the subject of common talk in the community. Partridge was a conspicuous character in the Church, and his children were followers. The name "Temple Lot" has adhered to this piece of property, on
2023 one of the principal thoroughfares of the city of Independence, through all these years. And the circumstances de-

tailed by Emily, the daughter of Partridge, under which the deed was executed to Poole, carry persuasive evidence to my mind, that he knew he was after acquiring this property covertly, and that he was really acting in the matter in the interest of Maxwell, to whom he at once conveyed. When Woodson and Maxwell, themselves old settlers, and conspicious characters of the county, platted this ground, they designated the street bounding this lot on the east, "Temple Street." They must have known they were trying to reduce to speculative interest a spot sacred to this church. They assumed, doubtless, that those people violently expelled from the State and under popular odium, would not have the temerity to claim their own, and to carry out the purpose of the dedication of this lot.

Granville Hedrick, the head and founder of the respondent organization, was himself, up to 1857, a conspicuous member and minister of the complainant organization. He knew all about the trust character of this property, and his purpose was, in buying up the supposed outstanding titles, to preserve the property to its trust use. So impregnated with this thought were his followers that the leader and trustee for this property testified in this case as follows:

Q. Is it true that you claim and hold, and have always so claimed and held since you have been the trustee, to hold the property in trust for the legal succession of the church that was organized in 1830?

A. In no other way have we held it than for the church, and we claim to be the church in legal succession from 1830, down to the present. We are holding it in trust for the church, which is represented by us, and which we claim is the church that was organ-
2024 ized by Joseph Smith on the 6th day of April, 1830, as history records it. We claim to hold the property in that way as being part and parcel of the church organized at that time.

The respondent Hill, who holds whatever title the respondents have to this property, testified that he came to Independence, Missouri, in 1868, "not because of any special temporal benefit" but because "the Saints were to gather here in Independence, or Zion as it is called. I had read the revelation in the Book of Doctrine and Covenants, in reference to the Temple property here, in Independence, beginning with July, 1831. I did not have to try to find it (the lot) for it was here plain enough to be seen. I found the Temple property myself, and it was known as the Temple Lot when I came here."

While it is true that a person purchasing land from one who appears by record deed to be the owner in fee is not bound by equities in favor of a stranger to the deed, yet, if he have notice of equities *dehors* the record, he is as effectually bound thereby as if such equities were incorporated in the deed.

"The taking of a legal estate after notice of a prior writing makes a person a mala fides purchaser;—and actual notice embraces all degrees and grades of evidence, from the most direct and positive proof, to the slightest circumstance from which a jury would be warranted in inferring notice." Simmons Creek Coal Co. vs. Doran, 142 U. S. 437-438.

There is perhaps not a Mormon on the American continent possessed

of any intelligence, who has not known, from his connection with the church, the history of the Temple Lot at Independence. And it would be about as reasonable to suppose that an Israelite could become the purchaser of a lot in Jerusalem and claim that he was an innocent purchaser against the design of his people to re-establish there the new Jerusalem as to say these respondents are innocent purchasers.

2025 It remains to be ascertained who are the true beneficiaries of this trust. It is a mere play on words, a clutching after shadows, for respondents to quibble about the precise name by which the Mormon Church was known in its early history. As well say that the denomination of Christians now known as "The Christian Church" has lost their identity, because in their early history they were called Campbellites. The identity, unity and sameness from 1830 to 1844 of the Mormon Church are too clear for debate. Now and then, by this and that person, it was called "The Church of Christ," "Church of Latter Day Saints," and "The Church of Jesus Christ of Latter Day Saints." The terms were employed interchangeably. As applied to this issue it is rather a question of identity of doctrine. The temple built at Kirtland, Ohio, the central rendezvous between 1830 and 1835, was inscribed on the portal with the words, "The Church of Jesus Christ of Latter Day Saints." This was the public, authoritative recognition of the name by which they chose to be known.

Beyond all cavil, if human testimony is to place any matter forever at rest, this church was one in doctrine, government and purpose from 1830 to June, 1844, when Joseph Smith, its founder, was killed. It had the same federal head, governing bodies and faith. During this period there was no schism, no secession, no "parting of the ways," in any matter fundamental, or affecting its oneness.

The only authorized and recognized books of doctrine and laws for the government of the church from 1830 to 1846 were the Bible, the Book of Mormon and the Book of Doctrine and Covenants. The Book of Doctrine and Covenants which consisted principally of claimed divine revelations to Joseph Smith, was the edition published at Kirtland, Ohio, in 1835, and at Nauvoo in 1845.

2026 No possible question could be made but that had this church with its central governing power resident at Nauvoo, asserted right of control over this property up to 1845, it would have been recognized by the ecclesiastical body and by the courts of chancery, as the beneficiary of the trust recognized by Edward Partridge from 1832 and declared by him in his trust deed of 1839.

Joseph Smith was killed at Carthage, Illinois, in June, 1844. He was the president and inspiring spirit of the church. His violent death struck with dismay the hearts of his followers. And out of the confusion incident thereto was born disorder, schism and ambition for leadership. Disintegration set in, and the church split into factions, which under the lead of different heads, scattered to different parts of the country. Among the "Quorum of Twelve"—representing the Apostles—was one Brigham Young, a man of intellectual force, shrewd and aggressive, if not audacious. Naturally enough, such a man gathered around him the greater numbers and it was an

easy matter for him to seize the fallen reins of the presidency. He led the greater portion of Mormons out to what is known as "Winter Quarters" near Omaha, and thence to Salt Lake Valley in Utah, then a dependency of Old Mexico. From this settlement has sprung the powerful ecclesiastical body known as the Salt Lake or Utah Church. While the respondents are wary of claiming alliance with this Salt Lake Church, it is evidently the "power behind the throne" in the defense of this suit; and claim is made by respondents' counsel that it in fact absorbed the Mormon Church, and is the real successor to the ancient Church.

There can be no question of the fact that Brigham Young's assumed presidency was a bold and bald usurpation. The Book of Doctrine and Covenants (printed in 1846), page 411, containing a revelation to Joseph Smith, January 19th, 1841, gave unto them "my servant Joseph to be a Presiding Elder over all my church, to be a
2027 translator, a revelator, a seer and a prophet; I give unto him for councilors, my servant Sidney Rigdon and my servant William Law, that these may constitute a quorum and first presidency to receive the oracles for the whole church. I give unto my servant Brigham Young, to be a president over the twelve traveling council." So that Brigham was but president over the "Twelve"—a traveling council. The Book clearly taught that the succession should descend lineally and go to the first born. Joseph Smith so taught, and before his taking off, publicly proclaimed his son Joseph, the present head of the complainant church, his successor, and he was so anointed.

The Book also contains the following (when referring to Joseph Smith):

"But verily, I say unto you, that none else shall be appointed unto the gift except it be through him, for if it be taken from him he shall not have power, except to appoint another in his stead; and this shall be a law unto you that you receive not the teachings of any that shall come before as revelations or commandments; and this I give unto you that you may not be deceived that you may know they are not of me. For verily I say unto you he that is ordained of me shall come in at the gate and be ordained as I have told you before to teach those revelations that you have received, and shall receive through him whom I have appointed."

Brigham Young's assumption of this office (under the claim of something like a transfiguration), was itself a departure from the law of the church.

The Book of Mormon itself inveighed against the sin of Polygamy. True it is that Brigham Young taught that these denunciations of the Book were leveled at the Indians, but I confess to an utter
2028 inability to interpret human language if this be correct. In Chapter 1, Book of Jacob, in speaking of the people of Nephi, the favored people, they are arraigned for growing hard of heart, and "indulge themselves somewhat in wicked practices, such as like unto David of Old, desiring many wives, and concubines, and also Solomon, his son." And in Chapter 2, same Book, after alluding to the filthiness, evidently, of the Indian tribes, it says: "Behold the Lamanites, your brethren, whom ye hate, because of their filthiness,

and the cursings which have come upon their skins, are more righteous than you, for they have not forgotten the commandment of the Lord, which was given unto our fathers, that they should have save it were one wife, and concubines they should have none. And now this commandment they observe to keep; wherefore, because of this observance in keeping this commandment the Lord God will not destroy them, and one day they shall become a blessed people."

How it can be that the Lamanites please God by sticking to one wife and the Nephites displease Him by imitating David and Solomon in multiplying wives, and yet Polygamy is to be a crown of righteousness in the teachings of the Angel Mormon challenges my power of comprehension. It requires transfiguration to do so.

Conformably to the Book of Mormon, the Book of Doctrine and Covenants expressly declared "That we believe that one man should have but one wife and one woman but one husband." And this declaration of the Church on this subject reappeared in the Book of Doctrine and Covenants, edition of 1846 and 1856. Its first appearance as a dogma of the Church was in the Utah Church in 1852.

2029 Claim is made by the Utah Church that this doctrine is predicated of a revelation made to Joseph Smith in July, 1843. No such revelation was ever made public, during the life of Joseph Smith, and under the law of the Church it could not become an article of faith and belief until submitted to and adopted by the Church. This was never done.

No more complete and caustic refutation of this claim made by Brigham Young can be found than in Exhibit "W" in this case, in a book entitled "The Spiritual Wife System Proven False," issued by Granville Hedrick, the head of the respondent church in 1856. He ridiculed the pretension of Brigham Young, that he had this revelation, unproclaimed, locked up in his private chest for nine years. He says, "Now, how strangely inconsistent, that the revelation should be given nine or ten years before its time, and have to lie eight or nine years under his patent lock before it would be time to proclaim it. Here, then we have a specimen of an abortive revelation, come before its time, and had to be put in the sacred desk under a patent lock for eight or nine years and shown occasionally,—just often enough to get the thing used to it, so that when it got old enough it could go abroad. So much for his curious revelation, come in an abortion—got burned up—then locked up—and now has gone forth to damn everybody that don't believe in it. Why! it is a perfect phoenix."

When the present president of the Salt Lake Church, Wilford Woodruff, was on the witness stand, he testified that on the 15th of November, 1844, there was no marriage ceremony in the Church except that published in the edition of 1835. He was then asked, why the Church of which he is president, in the publication of the Book of Doctrine and Covenants, in the Salt Lake edition of 1876, eliminated the section on marriage as found in the 1835 edition and in all editions thereof published up to 1876 and inserted in lieu

2030 thereof the claimed revelation on Polygamy of July, 1843.

"Answer. I do not know why it was done. It was done by

the authority of whoever presided over the church, I suppose. Brigham Young was the president then."

The Utah Church further departed from the principles and doctrines of the original church by changing in their teachings the first statement in the Article of Faith, which was, "We believe in God, the Eternal Father and in his Son, Jesus Christ and in the Holy Ghost," and in lieu thereof taught the doctrine of Adam—God Worship," which, as announced in Journal of Discourses by Brigham Young, is as follows: "When our Father Adam came into the Garden of Eden, he came into it with a celestial body and brought Eve, one of his wives, with him. He helped to make and organize this world. He is Michael, the Anchangel, the Ancient of Days—about whom holy men have written and spoke—He is our Father and our God and the only God with whom we have to do."

It has introduced societies of a secret order, and established secret oaths and covenants, contrary to the Book and teachings of the old church. It has changed the duties of the president, and of the Twelve, and established the doctrine to "Obey Counsel" and has changed the order of the "Seventy or Evangelists."

X.

The next important and interesting question is, does the complainant church represent the beneficiaries of this property?

In controversies of this character, respecting the rightful ownership of church property, the civil judiciaries have nothing to do with the question as to which faction expounds the sounder theology or moral philosophy, and which best accords with reason and common sense. A good chancellor may be an indifferent theologian; and when he should lay aside the ermine for the surplice he
2031 might prove more bigot than justiciary. As said in Smith vs. Pedigo, 33 N. E. Rep., 777, "Religious doctrines and practices are listened to by the courts solely as facts upon which civil rights and the right to property are made to depend, regardless of the ultimate truth or soundness of such doctrines, practices and beliefs."

In case of disorganization and factional divisions, of an ecclesiastical body, the settled rule of the civil courts is that the "title to church property—is in that part of it which is acting in harmony with its own law, and the ecclesiastical laws and usages, customs and principles, which were accepted among them before the dispute began, and the standards for determining which party is right." The right of ownership abides with that faction, great or small, which is "in favor of the government of the church in operation, with which it was connected at the time the trust was declared."

McRoberts vs. Moudy, 19 Mo. App. 26; Roshi's Ap. 69 Pa. St. 462; Baker et al. vs Thales, 9 Pick. 488; Whitlick vs Whitelick, 83 Ind. 130.

The Courts will adjudge the property "to the members, however few, in numbers they may be, "who adhere to the form of church government, or acknowledge the church connection, for which the property was acquired." (Judge Strong's lecture on Relation of Civil Law to Church Property, page 49-59.)

Justice Caton in Farraria et al. vs Vanconcellos et al., 31 Ill. 54–

55, aptly states the rule to be, "That where a church is erected for the use of a particular denomination or religious persuasion, a majority of the members cannot abandon the tenets and doctrines of the denomination and retain the right to the use of the property, but such secessionists forfeit all right to the property, even if but a single member adheres to the original faith and doctrine of the church. This rule is founded in reason and justice—Those who adhere to the original tenets and doctrines, for the promulgation
2032 of which a church has been erected, are the sole beneficiaries designed by the donors; and those who depart from and abandon those tenets and doctrines, cease to be beneficiaries, and forfeit all claim to the title and use of such property."

No matter therefore, if the church at Nauvoo became a prey to schisms after the death of Joseph Smith, and presented as many frightful heads as did the dragon which the Apostle John saw in his vision on the Isle of Patmos, if there was one righteous left in Sodom, the promise of the covenant and of the law of the land is to him. It is neither good law nor Bible history to say that because the saints became scattered and without an organism, the faithful lost the benefit of the church property. Forsooth the children of Israel were carried captive to Babylon—"the mother of harlots and the abomination of the earth"—they did not cease to be children of the covenant nor lose their interest in Jerusalem.

A considerable number of the officers and members of the church at Nauvoo did not ally themselves with any of the factions and wherever they were they held on to the faith, refused to follow Brigham Young to Utah, and ever repudiated the doctrine of Polygamy, which was the great rock of offense on which the church split after the death of Joseph Smith.

In 1852, the scattered fragments of the church, the remnants of those who held to the fortunes of the present Joseph Smith, son of the so-called "martyr" gathered together sufficiently for a nucleus of organization. They took the name of "The Re-Organized Church of Jesus Christ of Latter Day Saints" and avowed their allegiance to the teachings of the ancient church; and their epitome of faith adopted, while containing differences in phraseology in its essentials is but a reproduction of that of the church as it existed from 1830 to 1844. To-day they are 25,000 strong.

2033 It is charged by the respondents, as an echo of the Utah Church, that Joseph Smith, "the Martyr," secretly taught and practiced polygamy; and the Utah contingent furnishes the evidence and two of the women to prove this fact. It perhaps would be uncharitable to say of these women that they have borne false testimony as to their connection with Joseph Smith; but in view of all the evidence, and circumstances surrounding the alleged intercourse, it is difficult to escape the conclusion that at most they were but sports in "nest-hiding." In view of the contention of the Salt Lake party, that polygamy obtained at Nauvoo as early as 1841, it must be a little embarrassing to President Woodruff of that organization when he is confronted, as he was in the evidence in this case, with a published card in the church organ at Nauvoo, in October, 1842, certifying that he knew of no other rule or system of marriage than

the one published in the Book of Doctrine and Covenants, and that the "secret wife system" charged against the church, was a creature of invention by one Dr. Bennett, and that they knew of no such society. That certificate was signed by the leading members of the church, including John Taylor, the former President of the Utah Church. And a similar certificate was published by the Ladies' Relief Society of the same place signed by Emma Smith, the wife of Joseph Smith, and Phoebe Woodruff, wife of the present President Woodruff. No such marriage ever occurred under the rules of the church, and no offspring came from the imputed illicit intercourse, although Joseph Smith was in the full vigor of young manhood, and his young wife, Emma, was giving birth to healthy children in regular order and was enceinte at the time of Joseph Smith's death.

But if it were conceded that Joseph Smith and Hiram, his brother, did secretly practice concubinage, is the church to be charged with these liaisons, and the doctrine of polygamy to be predicated thereon of the church? If so, I suspect the doctrine of polygamy
2034 might be imputed to many of the Gentile churches. Certainly it was never promulgated, taught nor recognized, as a doctrine of the church, prior to the assumption of Brigham Young.

It is next charged against the complainant church that it has added to the articles of faith other revelations of the Divine will, alleged to have been made to Joseph Smith, the present head of the complainant church. If so, how can this be held to be heretical or a departure, when in the epitome of faith of the ancient church is this article:

"We believe all that God has revealed, all that He does now reveal, and we believe that He will yet reveal many great and important things pertaining to the Kingdom of God." And in the Book of Doctrine and Covenants paragraph 2, section 14, it is taught that such revelations might come through him whom the prophet might ordain.

In the very nature of the doctrine of the church, that God in the fullness of time makes known His will to the church by revelation, additional revelations were to be expected. No specification is made by learned counsel as to wherein the alleged new revelations declare any doctrine at variance with that taught in antecedent revelations.

It is next charged that the complainants have a new Bible. The basis for this is, that Joseph Smith, the founder of the Church, was as early as 1830 engaged in a translation of the Bible, which he is alleged to have completed about 1833 or 1834. This work seems to have been recognized also in a revelation in section 13, paragraph 15, and in section 58 The evidence shows that this manuscript was kept by his wife and delivered to the present Joseph Smith, her son, and was published by a committee of the church. It is not claimed by Joseph Smith that this translation is a substitute for the King James translation, nor has it been made to appear that it in-
2035 culcates any new religious tenet different from that of the ancient church. In this day of multifarious and free translations of the Bible it should hardly be imputed a heresy in this church to take some liberties with the virgin Greek and Hebrew. It is also charged that the complainant church has only eleven rep-

resenting the Quorum of Twelve. I believe the New Testament records it as a historical fact that "Peter stood up with the eleven," after the apostacy of Judas Iscariot. There is nothing in the Code of the present Church to prevent the filling of the "Twelve."

There are some other minor objections to the present organization, the answer to which is so obvious that it scarcely need be made.

XI.

Who are the respondents and in what do they believe? Looking at their answer in this case, and their evidence the idea occurs that in theory they are ecclesiastical nondescripts, and in practice, "Squatter Sovereigns." They repudiated polygamy, while looking to Salt Lake City for succor. They deny in their answer that this property was ever bought for the church or impressed with a trust therefor, and yet, when their head men were on the witness stand, they swore they are a part and parcel of the original church, founded and inspired by Joseph Smith, "the Martyr," and that to-day they hold the property in question in trust for that church.

They are commonly called "Hedrickites" because their head is Granville Hedrick, who himself was a member of the complainant organization as minister, and participated actively in its General Conference as late as 1857, receiving the "right hand of fellowship" and moving the conference to works of evangelization in his region of the country. It is inferable from the testimony in this case that they reject measurably the standard Book of Doctrine and
2036 Covenants, and according to the testimony of respondent Hill, they "repudiate the doctrine taught by the church in general after 1833, 1834 and 1835." And also the law relating to "Tithes and Offerings" and the doctrine of baptism for the dead, which were taught by the Mother Church. They also seem to reject the law relating to the Presidency, and of the "Twelve Traveling High Council," and also the "Quorum of Seventy Evangelists."

They are but a small band, and their seizure of the Temple Lot and attempt thus to divert the trust, invoke the interposition of a court of equity to establish the trust and prevent its perversion.

XII.

LACHES.

It is urged by the respondents that the claim of complainant is stale, and that a court of equity will not afford relief where party complaining has been guilty of laches. There are several answers to this objection. In the first place, this is an express trust, in favor of complainant, arising on the Partridge deed of 1839. The statute of limitation does not rule against an express trust. There was no repudiation of the trust by the trustees. Laches is a question determined by the circumstances of the particular case.

The delay in bringing this action is not inexcusable. The beneficiaries of the trust were driven from the State in 1838–9 by military force, and were not permitted to return to the State. A public hostile feeling and sentiment were excited against them, which would have blazed up from the slumbering fires at any time there-

after prior to the Civil War, had they returned here and attempted to occupy this property. No one better knew this than the respondents when they laid hands to this property. The complainants
2037 were not here to "stand by" while parties were giving and receiving deeds to this property. No improvements were made on, and no visible possession taken of, the Temple Lot until 1882, within ten years of the institution of this suit, and when the trust deed had been of record 12 years. Up to this hostile action of respondents, the complainants had a right to assume that the trust character of this property was intact, and that the lot was open for their entry at any time when the auspicious hour came to build on it.

In the lauguage of Chief Justice Fuller, in Simmons Creek Coal Company vs. Doran, 142 U. S. 444, "There was no delay, therefore, in the assertion of its rights after they were invaded." See also Burke vs. Bachus, (Minn.) 53 N. W. Rep. 458.

XIII.

A court of equity has jurisdiction in this case. It belongs to it to remove clouds from title, "the relief being granted on the principle of quia timet." It is peculiarly its province in a case like this to vindicate the trust, to determine the real beneficiaries of the trust estate, and to prevent its diversion.

Decree will go in favor of complainant, establishing the trust in its favor against respondents, removing the cloud from the title, enjoining respondents from asserting title to the property, and awarding the possession to the complainant.

(Signed) JNO. F. PHILIPS, Judge.

Kansas City, Mo., Aug. 3, 1894.

2038 Miss Adelaide Utter,
Clerk U. S. Court, Kansas City.

We agree that in transmitting the record to the Clerk, J. D. Jordan, of the Circuit Court of Appeals in "Church Case," that you may send all exhibits in your possession, whether marked filed or not.

Case No. 1720.

Respectfully,

P. P. KELLEY,
SMITH McPHERSON,
Solicitors for Complainant.
JOHN N. SOUTHERN,
Solicitor for Respondents.

Kansas City, Mo. Aug. 3, 1894.

Miss Utter,
Clerk U. S. Circuit Court.

In addition to other matters you may if you please, send to Court Appeals one copy each of the abstracts used by Judge Philips.

SMITH McPHERSON,
P. P. KELLEY,
Solicitors for Respondents.
JOHN N. SOUTHERN,
Solicitor for Complainants.

2039 In the Circuit Court of the United States for the Western Division of the Western District of Missouri.

The Re-organized Church of Jesus Christ of Latter Day Saints,
1720 against
The Church of Christ at Independence, Missouri, et al.

It being necessary and proper in the opinion of the presiding Judge of this court in this cause that the original of the exhibits in this cause should be inspected on appeal by the Circuit Court of Appeals, it is hereby ordered that the original exhibits in this cause be sent with the transcript by express to the Clerk of said Court of Appeals, and by said Clerk safely kept and returned after the disposition of the case upon appeal. Said exhibits to be sent are as follows:

Original Tax Receipts.

Exhibit	U. S.	Blue Print.	
	V. S.	"	
	X. S.	"	
	Y. S.	"	
	Z. S.	"	
	A.	Doctrine and Covenants.	
	E.	"	1835.
	H.	"	1846.
	J.	"	1880.
	J.	"	1852.
	—	"	1891.
	C.	Holy Bible.	
	K.	Times & Seasons.	
	L.	"	
	DD.	Book of Mormon,	1830.
	F.	" "	1874.
2040	One,	Journal of Discourses.	
	Two,	Latter Day Saints' Messenger & Advocate.	
	Three,	Evening & Morning Star.	
	Four,	Rules of Order & Debate.	
	W.	Spiritual Wife System Proven False.	
	D.	A Few Choice Examples of Mormon Practices.	
	30.	Saints' Herald.	
	106.	The Truth Teller.	

July 18, 1894.
(Signed.) JNO. F. PHILIPS,
U. S. Dist. Judge.

* * * * * * * * *

Received Aug. 7, 1894, and filed Aug. 11, 1894. John D. Jordan, Clerk.

And on the eleventh day of August A. D. 1894, an appearance of Mr. C. O. Tichenor, as counsel for Appellants, was filed in the Clerk's office of said Circuit Court of Appeals in the words and figures following:—

United States Circuit Court of Appeals, Eighth Circuit. No. 516, December Term, 1894.

The Church of Christ at Independence, Mo., et al., Appellants,
vs.
The Reorganized Church of Jesus Christ of Latter Day Saints,

The Clerk will enter my appearance as Counsel for the Appellants. C. O. TICHENOR.

ENDORSED: "U. S. Circuit Court of Appeals, Eighth Circuit. December Term, 1894, No. 516. The Church of Christ, etc., et al., Appellants vs. The Reorganized Church of Jesus Christ of Latter Day Saints. Appearance. Filed August 11, 1894. John D. Jordan, Clerk. C. O. TICHENOR, Counsel for Appellants."

And the fifteenth day of August A. D. 1894, an appearance of Mr. J. N. Southern, as counsel for Appellants, was filed in the Clerk's office of said Circuit Court of Appeals in the words and figures following:—

United States Circuit Court of Appeals, Eighth Circuit. No. 516. December Term, 1894.

The Church of Christ at Independence, Mo., et al., Appellants,
vs.
The Reorganized Church of Jesus Christ of Latter Day Saints.

The Clerk will enter my appearance as counsel for the Appellants, JOHN N. SOUTHERN.

ENDORSED: "U. S. Circuit Court of Appeals, Eighth Circuit. December Term, 1894. No. 516. The Church of Christ, etc., et al., Appellants vs. The Reorganized Church of Jesus Christ, etc., Appearance. Filed Aug. 15, 1894. John D. Jordan, Clerk.
"JOHN N. SOUTHERN, Counsel for Appellants."

And on the twenty-fifth day of September A. D. 1894, an appearance of Mr. E. L. Kelley, as counsel for Appellee, was filed in the Clerk's office of said Circuit Court of Appeals in the words and figures following:—

United States Circuit Court of Appeals, Eighth Circuit, No. 516, December Term, 1894.

The Church of Christ at Independence, Missouri, et al., Appellants,
vs.
The Reorganized Church of Jesus Christ of Latter Day Saints,

The Clerk will enter my appearance as Counsel for the Appellee.

E. L. KELLEY.

ENDORSED: "U. S. Circuit Court of Appeals, Eighth Circuit. December Term, 1894. No. 516. Church of Christ at Independence, Missouri, et. al., Appellants vs. Reorganized Church of Jesus Christ of Latter Day Saints. Appearance. Filed Sept. 25, 1894. John D. Jordan, Clerk. E. L. KELLEY, Lamoni, Iowa, "Counsel for Appellee."

And on the fourth day of October A. D. 1894, an appearance of Mr. Frank Hagerman, as counsel for Appellee, was filed in the Clerk's office of said Circuit Court of appeals in the words and figures following:—

United States Circuit Court of Appeals, Eighth Circuit, No. 516, December Term, 1894.

The Church of Christ at Independence, Mo., et al., Appellants,
vs.
The Reorganized Church of Jesus Christ of Latter Day Saints.

The Clerk will enter my appearance as Counsel for the Appellee, Reorganized Church of Jesus Christ of Latter Day Saints.

FRANK HAGERMAN.

ENDORSED: "U. S. Circuit Court of Appeals, Eighth Circuit. Dec. Term, 1894. No. 516. The Church of Christ, etc., Appellants, vs. The Reorganized Church of Latter Day Saints. Appearance. Filed Oct. 4, 1894. John D. Jordan, Clerk.

"FRANK HAGERMAN, Kansas City, Mo., "Counsel for Appellee."

And on the twentieth day of October A. D. 1894, an appearance of Mr. P. P. Kelley, as counsel for Appellee, was filed in the Clerk's office of said Circuit Court of Appeals in the words and figures following:—

United States Circuit Court of Appeals, Eighth Circuit. No. 516, December Term, 1894.

Church of Christ at Independence, Missouri, et. al., Appellants,
vs.
Reorganized Church of Jesus Christ of Latter Day Saints.

The Clerk will enter my appearance as Counsel for the Appellee.

P. P. KELLEY.

ENDORSED: "U. S. Circuit Court of Appeals. Eighth Circuit. December Term, 1894. No. 516. Church of Christ at Independence, Missouri, et al., Appellants vs. Reorganized Church of Jesus Christ of Latter Day Saints. Appearance. Filed Oct. 20, 1894. John D. Jordan, Clerk.

"P. P. KELLEY, Counsel for Appellee."

And on the thirtieth day of November A. D. 1894, an appearance of Mr. L. Traber, as counsel for Appellee, was filed in the Clerk's office of said Circuit Court of Appeals in the words and figures following; to-wit:—

United States Circuit Court of Appeals, Eighth Circuit. No. 516, December Term, 1894.

The Church of Christ at Independence, Mo. et al., Appellants,
vs.
The Reorganized Church of Jesus Christ of Latter Day Saints, Appellee.

The Clerk will enter my appearance as Counsel for the Appellee.

LAFAYETTE TRABER, of Counsel for Appellee.

ENDORSED: "U. S. Circuit Court of Appeals, Eighth Circuit. December Term, 1894. No. 516. The Church of Christ, Independence, Mo., et al., Appellants vs. The Reorganized Church of Jesus Christ, etc., Appellee. Appearance. Filed Nov. 30, 1894. John D. Jordan, Clerk.

"L. TRABER, of Counsel for Appellee."

And on the eleventh day of December A. D. 1894, an appearance of Mr. G. Edmunds, as counsel for Appellee, was filed in the Clerk's office of said Circuit Court of Appeals in the words and figures following;—

United States Circuit Court of Appeals. Eighth Circuit. No. 516, December Term, 1894.

Church of Christ, Independence, Mo., Appellant,
vs.
Reorganized Church of Jesus Christ, of Latter Day Saints, Appellee.

The Clerk will enter my appearance as Counsel for the Appellee.

G. EDMUNDS, Solr. for Appellee. Carthage, Ill.

ENDORSED: "U. S. Circuit Court of Appeals, Eighth Circuit. December Term, 1894, No. 516. Church of Christ, Independence, Mo., Appellant vs. Reorganized Church of Jesus Christ of Latter Day Saints, Appellee. Appearance. Filed December 11, 1894. John D. Jordan, Clerk.

"G. EDMUNDS, Carthage, Ills. Counsel for Appellee."

And on the fifteenth day of January A. D. 1895, an appearance of Mr. Smith McPherson, as counsel for Appellee, was filed in the

Clerk's office of said Circuit Court of Appeals in the words and figures following:—

United States Circuit Court of Appeals, Eighth Circuit. No. 516, December Term, 1894.

The Church of Christ, Independence, Mo., Appellant,
vs.
The Reorganized Church of Jesus Christ of Latter Day Saints,

The Clerk will enter my appearance as counsel for the Appellee.
SMITH MCPHERSON.

ENDORSED: "U. S. Circuit Court of Appeals, Eighth Circuit. December Term, 1894. No. 516. The Church of Christ, Independence, Mo., Appellant, vs. The Reorganized Church of Jesus Christ, etc. Appearance. Filed Jan. 15, 1895. John D. Jordan, Clerk.
"SMITH MCPHERSON, Counsel for Appellee."

And on the twenty-fifth day of January A. D. 1895, in the record of the proceedings of said Circuit Court of Appeals, is an entry in said cause in the words and figures following, to-wit:—

United States Circuit Court of Appeals, Eighth Circuit. December Term, 1894. Friday, January 25, 1895.

The Church of Christ at Independence, Missouri, et al., Appellants,
No. 516 vs.
The Reorganized Church of Jesus Christ of Latter Day Saints, Appellee.

Appeal from the Circuit Court of the United States for the Western District of Missouri.

This cause having been called for hearing, on motion forty-five minutes additional time was granted to each party for the argument thereof. Thereupon argument was commenced by Mr. C. O. Tichenor in behalf of Appellants and continued by Mr. Frank Hagerman in behalf of the Appellee and the hour of adjournment having arrived before the conclusion thereof, further argument was postponed until to-morrow morning.

And on the twenty-sixth day of January A. D. 1895, in the record of the proceedings of said Circuit Court of Appeals, is an order of submission in said cause in the words and figures following, to-wit:—

United States Circuit Court of Appeals, Eighth Circuit. December Term, 1894. Saturday, January 26, 1895.

The Church of Christ at Independence, Missouri, et al., Appellants,
No. 516 vs.
The Reorganized Church of Jesus Christ of Latter Day Saints. Appellee.

Appeal from the Circuit Court of the United States for the Western District of Missouri.

This cause having been called this day for further hearing, argument was continued by Mr. Frank Hagerman and Mr. E. L. Kelley in behalf of the Appellee and concluded by Mr. John N. Southern in behalf of the Appellants. Thereupon this cause was submitted to the Court upon the transcript of record from said Circuit Court and the briefs of Counsel filed herein.

And on the thirtieth day of September A. D. 1895, an opinion of said United States Circuit Court of Appeals was filed in said cause in the following words, to-wit:—

UNITED STATES CIRCUIT COURT OF APPEALS

EIGHTH CIRCUIT.

No. 516.—MAY TERM, A. D. 1895.

The Church of Christ at Independence, Missouri, Richard Hill, Trustee, Richard Hill, Mrs. E. Hill, George Frisbie, Mrs. E. Frisbie, Nannie Frisbie, Daniel Bauder, and G. D. Cole,

Appellants,

vs.

The Re-Organized Church of Jesus Christ of Latter Day Saints,

Appellee.

Appeal from the Circuit Court of the United States for the Western District of Missouri.

Mr. C. O. Tichenor and Mr. John N. Southern for the Appellants.
Mr. Frank Hagerman and Mr. E. L. Kelley (Mr. P. P. Kelley, Mr. L. Traber and Mr. George Edmunds were with them on briefs) for the Appellee.

Before CALDWELL, SANBORN, and THAYER, Circuit Judges.

STATEMENT.

This was a suit in equity which was brought by the Re-Organized Church of Jesus Christ of Latter Day Saints, the appellee, to obtain control and possession of lots 15, 16, 17, 18, 19, 20, 21 and 22 in Woodson and Maxwell's addition to the city of Independence, Missouri. The suit was brought against the Church of Christ at Independence, Missouri, Richard Hill, Trustee, Richard Hill, Mrs. E. Hill, George Frisbie, Mrs. E. Frisbie, Nannie Frisbie, Daniel Bauder and G. D. Cole, the appellants, who were at the time in possession of the lots in question and were using a small church edifice erected thereon as a house of worship. The complainant, The Re-Organized Church of Jesus Christ of Latter Day Saints, is a corporation of the State of Iowa having its principal place of busi-

ness at Lamoni in that State; it alleged that it was the equitable owner of the several lots in controversy and derained its title thereto in the following manner, that is to say: It averred that the lots were conveyed to one Edward Partridge on December 19, 1832, by a deed which in form conveyed an estate in fee simple, but that in point of fact said Edward Partridge purchased the property with money furnished for that purpose by the Church of Jesus Christ of Latter Day Saints formerly of Kirtland, Ohio, and that from and after the purchase of the same he held the title thereto in trust for the use and benefit of said church; that on March 28, 1839, said Partridge conveyed said property to Jane Cowdery, Joseph Smith Cowdery and John Cowdery, in trust for the use of the Church of Jesus Christ of Latter Day Saints formerly of Kirtland, Ohio, and in and by said deed recited that he had theretofore acquired the property with money furnished by said church and that he had theretofore held the title thereto in trust for its use and benefit; that on March 28, 1839, said Jane Cowdery, Joseph Smith Cowdery and John Cowdery, the grantees named in said trust deed, were minor children of Oliver Cowdery; that said minor children died intestate before attaining their majority, leaving as their heirs their mother, Elizabeth Ann Cowdery, widow of Oliver Cowdery, and a married sister, Marie Louise Johnson; that Elizabeth A. Cowdery, the mother of said minors, subsequently conveyed all her interest in the property in controversy to her said daughter, Marie Louise Johnson, and that on June 9, 1887, said Marie Louise Johnson and her husband conveyed said property to George A. Blakeslee, Bishop of the Re-Organized Church of Jesus Christ of Latter Day Saints in trust for the use and benefit of said church; that said George A. Blakeslee died in the year 1890, and that one E. L. Kelley was thereupon appointed Bishop of said Re-Organized Church of Jesus Christ of Latter Day Saints.

The bill of complaint further averred that after the death of said Edward Partridge, to wit: on May 5, 1848, his widow, Lydia Partridge, and three of his children conveyed the lots in controversy to James Pool notwithstanding the fact that they had no title thereto by reason of the previous conveyance of the same on March 28, 1839, to the minor children of Oliver Cowdery; that said James Pool, shortly thereafter, conveyed said property to John Maxwell, and that, by virtue of several other purchases and mesne conveyances, the Pool title to the premises in controversy became vested in one Granville Hedrick in trust for the Church of Christ of Latter Day Saints, which said last named church the bill averred to be the same church, under a different name, as the Re-Organized Church of Jesus Christ of Latter Day Saints.

The bill further averred that Granville Hedrick subsequently died, and that in an *ex parte* proceeding begun in the Circuit Court

of Jackson County, Missouri, Richard Hill, one of the defendants, was appointed trustee to hold the property and execute such trusts as may have been reposed in Granville Hedrick.

It was next averred, in substance, that the Church of Jesus Christ of Latter Day Saints was first organized in the State of New York in the year 1830; that it removed thence to Kirtland, Ohio, in 1831; that a branch of said church was established at the town, now City, of Independence, Missouri, in 1832, and another branch thereof at Nauvoo, Illinois, some years later, and that it was while a branch of said church was thus established at Independence, Missouri, that the premises now in controversy were acquired by Edward Partridge for the use of said church as heretofore stated.

It was further averred that said church while established at Nauvoo, Illinois, about the year 1846, was broken up and became divided into factions, part of the members going to Salt Lake, Utah, under the leadership of Brigham Young, and the residue of the members locating at different points in the States of Illinois, Wisconsin and Michigan under the leadership of various persons; that eventually those members of the church who adhered to the true faith as taught in 1832 and to subsequent authentic revelations, and who did not follow Brigham Young to Utah, became consolidated into the complainant corporation under the name of the Re-Organized Church of Jesus Christ of Latter Day Saints, and that by virtue of continuing to hold the true faith the complainant church was the owner of all the property in controversy.

The bill further averred that the defendant church, to-wit: the Church of Christ at Independence, Missouri, which had obtained possession of the property in controversy and was using it as a place of worship, consisted of less than twenty members; that it had no organization elsewhere than at the city of Independence, Missouri, and that it had departed from the true faith of the Church of Jesus Christ of Latter Day Saints, originally organized in New York, in that said defendant church and its members denied all the articles of faith adopted by the mother church after the year 1835, and insisted that after the year 1834 Joseph Smith, the original founder of the church, was a fallen prophet and that his teachings subsequent to that date were false and heretical.

The bill prayed for a decree, declaring, among other things, that the real estate in controversy and the whole thereof belonged to and was the property of the Re-Organized Church of Jesus Christ of Latter Day Saints, free and clear of all rights, claims and interests of the defendants or any of them therein.

The answer to the bill of complaint denied many of the allegations therein contained. Among other things the defendants denied that the complainant church was the owner of any of the lots of land described in the bill of complaint to which it laid claim. They

denied that Edward Partridge acquired the title to said lands in trust for the Church of Jesus Christ of Latter Day Saints or that he ever conveyed the same to the three minor children of Oliver Cowdery in trust for the purposes stated in the bill of complaint, or for any other purpose. Besides denying some other material allegations of the bill, the defendants pleaded substantially the following facts: that James Pool purchased the property in controversy from Lydia Partridge, the widow of Edward Partridge, and from Eliza M. Partridge, Emily D. Partridge and Caroline E. Partridge, the children of Edward Partridge, in the year 1848, paying therefor the sum of three hundred dollars; that at the time of making said purchase said Pool had no notice whatever that any other person or persons claimed to have any interest in the property and that the deed conveying the same to said James Pool was duly recorded in the proper Registry office of Jackson County, Missouri, on June 16, 1848; that James Pool shortly afterwards sold and conveyed said property to John Maxwell who was also an innocent purchaser of the same for value, and that by virtue of numerous other conveyances thereafter made, which were specifically described in the defendents' answer, the title to lots 16, 20 and 21 originally acquired by James Pool from the heirs of Edward Partridge became vested in John H. Hedrick prior to November 8, 1869, and that the title of said James Pool to lots 15, 17, 18, 19 and 22 became vested in one William Eaton prior to November 5, 1877. The answer further averred that on November 8, 1869, and on November 5, 1877, John H. Hedrick and wife and William Eaton and wife severally conveyed the lots by them respectively owned as aforesaid to Granville Hedrick in trust for the defendant church, that is to say: The Church of Christ at Independence, Missouri, and that said Granville Hedrick continued to hold the property so acquired upon such trust until his death in September, 1890, after which date the defendant Richard Hill was appointed trustee to hold the said property upon the same trust.

The defendants further alleged in their answer, in substance, that the great body of the members of the original church, termed the Church of Jesus Christ of Latter Day Saints, after the breaking up of that church at Nauvoo, Illinois, followed Brigham Young to Utah Territory; that a few separated from the main body, remained behind and followed various factional leaders or spiritual advisors; that dissenters from these various factional organizations eventually organized the so-called Re-Organized Church of Jesus Christ of Latter Day Saints, and that said last named church since its organization had propagated "a combination of tenets and doctrines peculiar to its organization by and through a system unknown to the adherents of the Church of Christ of Latter Day Saints from which it claims to have descended."

The answer also alleged that the complainant church had never exercised any authority or control over the several lots in controversy, but that, in point of fact, the defendant church, that is to say: the Church of Christ at Independence, Missouri, by its members and its trustee had for more than twenty years held possession thereof, openly and notoriously, and had paid all the taxes on said property.

In the circuit court there was a decree in favor of the complainant. By the terms of the decree it was adjudged, among other things "That the Re-Organized Church of Jesus Christ of Latter Day Saints * * * is a corporation duly and regularly organized under the laws of the State of Iowa, and as such includes in its corporate capacity the whole of the membership thereof, wherever found, and that the complainant has the right to maintain this action in its corporation capacity. That the property in controversy, to-wit, lots 15 to 22 inclusive in Woodson & Maxwell's addition to the city of Independence, in the County of Jackson, State of Missouri, is and stands charged with a trust in favor of complainant, and that complainant is the owner of the equitable title in and to said land, the possession of which is now held by the respondents. * * * That the purported deed from three of the five heirs of Edward Partridge to James Pool, was not acknowledged according to law, and the record thereof imparted no notice; and that neither said respondents nor any person through whom they claim title ever had actual or constructive possession of said property until about the month of September, 1882, and within ten years of the bringing of this suit. * * * That the said complainant is the owner of the property in controversy and that said respondents nor either of them, have any legal or equitable interest therein and are not entitled to the possession thereof, and that complainant, as such owner is entitled to the immediate possession thereof. * * * That the absolute title to said property be and is vested in complainant and that it is entitled to the immediate possession thereof, free and clear of all rights, claims or interests of the respondents or any of them. * * * That if upon demand by complainant upon respondents and a refusal to obey the decree or order of this court, complainant shall be entitled to a writ of assistance from the Clerk of this court, upon proof made by affidavit of such demand and refusal to obey, which writ shall command the Marshal of this court to eject the defendants and each and all of them from said land, to-wit: lots 15, 16, 17, 18, 19, 20, 21 and 22 in Woodson & Maxwell's addition to the city of Independence, Jackson County, Missouri, and put complainant in possession thereof."

From the foregoing decree the defendants have prosecuted an appeal to this court.

THAYER, J., after stating the case as above, delivered the opinion of the court.

The first question that deserves consideration is, whether by the allegations of its bill and the evidence offered to support it, the plaintiff corporation, hereafter termed the Re-Organized Church, succeeded in showing that it was vested with such a title to the premises in controversy as was adequate to maintain the action and to recover the possession of the property from those who were then holding and occupying it. The plaintiff corporation was organized on June 6, 1891, at Lamoni, Decatur County, Iowa, under the general laws of that State relating to "corporations other than those for pecuniary profit." (McClain's Annotated Code of Iowa, 1888, title 9, chap. 2. pp. 413, 414.) At the date of its organization as a corporation (according to the allegations of the bill) the legal title to the premises in controversy was vested either in the heirs of George A. Blakeslee, a former Bishop of the Re-Organized Church, or in E. L. Kelley, his successor in office. It was so vested by virtue of the deed said to have been executed by Marie Louise Johnson and her husband on June 9, 1887, whereby they undertook to convey the premises in dispute to said George A. Blakeslee, Bishop, and to his successor in office, as trustee, in trust for the use and benefit of the Re-Organized Church according to the laws and usages of the same. The bill of complaint was obviously framed on the theory that this latter deed vested in George A. Blakeslee, as Bishop of the Re Organized Church upon the trust aforesaid, the title originally conveyed by Edward Partridge to the three minor children of Oliver Cowdery by his deed of March 28, 1839, because said Marie Louise Johnson was the only surviving heir of said children in whom the title in trust had become vested by descent. The plaintiff church so far as the proof shows took no steps before the institution of this suit to acquire the legal title thus vested in the heirs of George A. Blakeslee, or in the present Bishop of the Re-Organized Church, by the deed of Marie Louise Johnson and her husband. It is contended, however, that such action was unnecessary for the reason that the articles of association adopted by the members of the Re-Organized Church on April 6, 1891, operated to vest the plaintiff corporation with an equitable title to the premises in dispute, on the strength of which title it could oust adverse occupants of the land and recover the possession thereof by a suit in equity.

We think that this position is untenable. A complainant who has only an equitable title to land cannot maintain a suit in chancery to recover the possession of the land from an adverse occupant, unless such occupant holds the legal title and the complainant seeks to obtain it, or unless the adverse occupant acquired possession of

the land under the alleged equitable title or is so connected therewith that it may be asserted against him. *Fussell* v. *Gregg*, 113 U. S. 550, 554, and cases there cited. None of these latter conditions appear to exist in the present case. According to the averments of the bill, the person in whom the legal title is now vested in trust for the members of the Re-Organized Church is not before the court. The bill does not concede that the defendants who are in possession and who are holding the premises in dispute under a conveyance by the heirs of Edward Partridge to James Pool of date May 5, 1848, have any title to the premises, either legal or equitable. On the contrary, it was expressly averred in the bill that, at the time of the conveyance to James Pool, "the widow and children of said Partridge had no ownership in said land nor any interest in trust." Besides, it was alleged by the plaintiff corporation, and the circuit court so found, that James Pool was not an innocent purchaser from the Partridge heirs, and that all subsequent purchasers of the Pool title bought with notice of that fact. This placed the defendants in the attitude of mere trespassers upon the premises in controversy, and according to the rule last stated, they could not be ousted of possession by a proceeding in equity at the instance of a suitor who at most only claimed an equitable interest in the property which was acquired by the incorporation of the Re-Organized Church in a foreign state. Whether such act of incorporation had the effect of transferring to the plaintiff corporation an equitable interest in the premises in controversy, the same being land situated in a foreign state, we need not stop to inquire, for, in our opinion, the equitable interest so acquired, whatever may have been its nature, was not sufficient to support an action for the recovery of the possession from an adverse occupant who claimed under an independent title, to-wit: under the conveyance to James Pool made by the heirs of Edward Partridge on May 5, 1848, and who denied the existence of the trust said to have been declared or created by the deed of Edward Partridge to the Cowdery children of date March 28, 1839. Under the pleadings and the evidence the situation is briefly as follows: The plaintiff corporation alleges in effect that the legal title to the premises is now vested in the heirs of George A. Blakeslee or in E. L. Kelley, the present Bishop of the Re-Organized Church, in trust for the use and benefit of the members of the latter church, and that said Re-Organized Church is the legitimate successor of the Church of Jesus Christ of Latter Day Saints, in whose favor a trust in the premises was originally created, because the members of said Re-Organized Church hold the same faith and practice the same rites. On the other hand the defendants aver that they purchased the property from persons who owned the Pool title, and that the legal title to the premises is now well vested in Richard Hill in trust for the use and benefit of

the defendant church, to-wit: the Church of Christ at Independence, Missouri. The defendants also deny the authenticity of the deed said to have been executed by Edward Partridge on March 28, 1839, in favor of the Cowdery children. They also deny the existence of the trust thereby declared or created.

The case, therefore, is not one where the title to church property is undisputed and the trust upon which it was originally conveyed is admitted and a controversy has arisen between rival church factions as to which is the proper beneficiary of the trust, a controversy growing out of the fact that one or the other faction has abandoned the original faith or has altered the form of church government. In such cases, no doubt, a court of equity has jurisdiction to inquire into matters of faith and discipline, and to determine, in view of such inquiry, who is the proper beneficiary, and, as such, entitled to the use, custody and control of the church property. But in the suit at bar the respective parties assert different legal titles held by different persons upon different trusts or for the use of different religious sects or congregations. The most important question presented by the record would seem to be whether the legal title now said to be held by the heirs of George A. Blakeslee or by E. L. Kelley, his successor in office, for the use and benefit of the Re-Organized Church, is superior to the legal title said to be held by Richard Hill in trust for the Church of Christ at Independence, Missouri, and that is a question which should be determined by a court of law. Moreover, it would seem that the settlement of that question will, at the same time, determine upon what trust, if any, the property in controversy is now held.

There is another reason, we think, why a court of equity ought not to lend its aid at this late day to enforce the trusts declared by the alleged deed of Edward Partridge to the children of Oliver Cowdery, deceased. That deed though it purports to have been executed and acknowledged by Partridge in the month of March, 1839, was not recorded until February 7, 1870, prior to which latter date no one seems to have been aware of its existence. The original deed, which is quoted in full in the margin*, was not produced

---

* "Edward Partridge,
to
Jane Cowdery, at al.

KNOW ALL MEN, that whereas there was money put in my hands, to-wit,—in the hands of Edward Partridge, by Oliver Cowdery, an elder in the Church of Latter Day Saints, formerly of Kirtland, State of Ohio, for the purpose of entering lands in the State of Missouri, in the name of, and for the benefit of said church; and, Whereas, I, Edward Partridge was Bishop of, and in said church he took said money and funds thus put in his hands and entered the land in his own name, in the county of Jackson, State of Missouri, in the name of Edward Partridge, the signer of this deed,

Now know ye that for the furthering the ends of justice, and as I have to

at the trial of the case, and the evidence failed to show who had possession of the same or whether it was still in existence. The land embraced by the description in that conveyance is a tract containing about sixty-three acres which is now situated in the heart of the City of Independence, Missouri. The eight lots in controversy in this suit, which contain altogether about two and one-half acres, are a part of the sixty-three acre tract and are referred to in the deed as the "Temple Lot." The deed for the same property that was executed by the widow and children of Edward Partridge on May 5, 1848, was filed for record and was recorded in Jackson County, Missouri, on June 16, 1848. It purported to convey to James Pool, for an expressed consideration of three hundred dollars, a tract of land described by metes and bounds containing 63 43-100 acres. This tract was subsequently sub-divided into five additions to the City of Independence, Missouri, by persons who claimed title to the same under the conveyance to James Pool of date May 5, 1848. The first of these additions which embraces the lots in controversy was made by Woodson and Maxwell by a plat duly filed and recorded as early as March 31, 1851. Two other additions were carved out of the tract and plats thereof were filed in the years 1866 and 1868. The residue of the tract became additions to the City by plats which were approved by the city authorities and filed during the years 1886 and 1887, respectively.

Since the tract was thus sub-divided into additions and attached to the city of Independence, hundreds of persons have bought lots therein in reliance on the Pool title. Streets and alleys have been opened through the tract and many buildings and other improvements have been erected at great expense to the numerous occupants of the property. These improvements began, as it seems, long prior to the year 1870, and have continued without interruption to the present date. The record further shows that the lots in con-

---

leave the State of Missouri, by order of Governor Boggs, and with me also our church, I do for the sum of one thousand dollars, to me in hand paid by said Oliver Cowdery, do give, grant, bargain, and sell to John Cowdery, son of Oliver Cowdery, now seven years old; and Jane Cowdery, three years, and Joseph Smith Cowdery one year old; all the lands entered in my name in the county of Jackson, in the district of Lexington, in the State of Missouri. Said Edward Partridge the first party and signer of this deed does also sell, alien, and confirm to the aforesaid John Cowdery all real estate and lands he has both entered as aforesaid, and all he owns in his own name by private purchase and holds by deed of gift, being intended for the use of the Church of Latter Day Saints or otherwise. This sale is to embrace all lots of all sizes, situated in Independence, and to embrace the lot known as the Temple Lot, and all other lands of whatever description said Partridge the first party is entitled to in said Jackson County, in the State of Missouri. Said Partridge also agrees to amend this deed to said Olivery Cowdery at any time for the purposes aforesaid.

Given under my hand and seal on the date above written.

E. G. GATES, Witness. EDWARD PARTRIDGE. (Seal)"

troversy became the subject-matter of a suit in partition between the heirs of John Maxwell, deceased, and Samuel H. Woodson, in the year 1859, and that, by virtue of the decree in that suit, said lots were subsequently exposed for sale and some of them were actually sold and conveyed to the respective purchasers. It should be stated in this connection that John Maxwell purchased the Pool title to the sixty-three acre tract originally owned by Edward Partrigde as early as August 3, 1848. He entered into a contract with Samuel H. Woodson in February, 1851, by virtue of which the latter acquired an interest in the property, and, after the death of Maxwell and after the laying out of Woodson & Maxwell's addition, Woodson brought the aforesaid suit in partition against the heirs of Maxwell which resulted in the decree of partition last mentioned and in a judicial sale of the premises in controversy.

The evidence shows that the title asserted by the defendants to the lots in controversy was acquired by Granville Hedrick, as trustee of the Church of Christ, from John H. Hedrick and wife and from William Eaton and wife on November 8, 1869, and on November 5, 1877, substantially as alleged by the defendants in their answer. John H. Hedrick and William Eaton appear to have acquired their respective titles to the lots in controversy, through persons who purchased the lots at the partition sale aforesaid under decree in the case of *Samuel H. Woodson* vs. *The Heirs of John Maxwell*, deceased. The title thus asserted by the defendants under the Pool deed of May 5, 1848, is the same paper title, so far as the record discloses, under which every lot of land lying within the sixty-three acre tract originally owned by Edward Partridge is now held by the numerous persons who, during the last thirty years, have settled on the tract and have erected improvements thereon. Moreover, it is the only record title that was generally recognized as conferring any interest in said tract of land for more than forty years before the present suit was instituted. The claim, therefore, which is now preferred by the plaintiff church under the deed of March 28, 1839, to the minor children of Oliver Cowdery, operates as a cloud upon the title to the entire tract. It is doubtless true that many of the occupants of the property in question, whose titles are clouded by the present litigation, could, if put to the test, show a good title to the respective lots of land by them occupied by adverse possession for more than ten years; but as is well known, the improvement of property is frequently delayed or prevented and the market value thereof is often seriously impaired, especially if, as in this instance, it is city property, by a cloud cast upon the record title, which can only be removed by proof of adverse occupancy for the period necessary to confer a title by the statute of limitations.

It is also a significant fact that from the year 1867 to the pres-

ent time the two trustees of the defendant church, to-wit: Granville Hedrick and Richard Hill, and the persons under whom they claim title, have paid all the taxes that have been assessed against the several lots now in controversy. The taxes so paid amount to a considerable sum. In the meantime, no one seems to have questioned the title under which the trustees claimed to hold said property, or their right of occupancy until June 11, 1887. At the latter date a notice was served on the defendant, Richard Hill, by George A. Blakeslee acting as Bishop and trustee of the Re-Organized Church, requiring him to cease making further improvements on the property in controversy and to surrender the possession thereof to the Re-Organized Church. The suit at bar to enforce this demand was not commenced, however, until five years thereafter, to-wit: on August 6, 1891. It is also a noticeable circumstance that some years before the commencement of the present suit, but how long before the evidence does not definitely disclose, a congregation of the Re-Organized Church erected a house of worship at Independence, which is situated across the street from the lots in controversy and entirely outside of the sixty-three acre tract originally owned by Edward Partridge, which is now claimed to be held in trust for the use and benefit of the Re-Organized Church.

In view of the foregoing facts, we think that the plaintiff church and those whom it claims to represent have been guilty of such laches as should bar them from all relief in the forum of equity, even though it appeared that the premises in controversy were originally held in trust by Edward Partridge for The Church of Jesus Christ of Latter Day Saints, and even though it appeared that the Re-Organized Church is at this day the legitimate successor of the original beneficiary. It behooves all persons who claim an interest in real property which is situated within the limits of a large town or city and is rapidly coming into demand and appreciating in value, to be active and vigilant in the assertion of their rights thereto. A person claiming an interest in such property cannot remain silent and inactive for a long period while third parties are buying, selling, improving, and otherwise dealing with the property as their own, in reliance on a record title that is perhaps defective, and then be permitted to assert his own claim thereto in a court of equity. Courts of equity will not take such action as will discredit a title that has been dealt in for years and recognized as valid, and on the validity of which the fortunes of many persons may depend, unless their aid is invoked by a suitor who shows a clear equitable right nor unless he has been diligent in making his rights known and prompt in seeking relief when they were invaded. It is hardly necessary to observe that this is a familiar equitable rule founded upon sound considerations of public policy which has been frequently stated and applied, especially by the federal courts. *Badger*

v. *Badger*, 2 Wall. 87, 95; *Godden* v. *Kimmel*, 99 U. S. 201; *Galliher* v. *Cadwell*, 145 U. S. 368; *Felix* v. *Patrick*, 145 U. S. 317; *Naddo* v. *Bardon*, 4 U. S. App. 642; *Lemoine* v. *Dunklin County*, 10 U. S. App. 227; *St. Paul, Stillwater, & Taylors Falls Railroad Co.* v. *Sage*, 4 U. S. App. 160; *Wetzel, et al.*, v. *The Minnesota Railway Transfer Co.*, —— U. S. App. ——, Id. 12 C. C. A. 490, 65 Fed. Rep. 23.

It is urged, however, that the plaintiff church and those persons in whose behalf it sues are not guilty of laches for three reasons: first, because the founder of the trust and his adherents, commonly called Mormons, were driven out of the State of Missouri in the years 1838 and 1839 by military force and found it dangerous to return; second, because the defendants and those through whom they claim have not occupied the lots in controversy, continuously, for a period of ten years since their title thereto had its inception, and, third, because the suit is one to enforce the provisions of an expressed trust. We think that none of the reasons so assigned can be deemed a sufficient excuse for the failure to institute this proceeding at an earlier day. More than twenty years elapsed after the deed of Edward Partridge to the Cowdery children was filed for record in Jackson County before the bill of complaint in the present suit was filed, and during that period no obstacles seem to have stood in the way of a speedy assertion of the same title and claim to the property in controversy that is now asserted. It admits of no doubt, we think, that it was as well known in 1870 as it is now that the entire tract of land originally owned by Edward Partridge, embracing the lots in controversy, was then held by numerous persons who claimed to be the absolute owners of the property under the conveyance executed by the heirs of Edward Partridge to James Pool on May 5, 1848. The larger part of the tract had already been platted as additions to the city of Independence, Missouri, a portion thereof including the lots in controversy had been partitioned and sold in the suit betweeen Samuel H. Woodson and the heirs of John Maxwell, deceased, and buildings and other improvements had then been erected, or were shortly thereafter erected, on all parts of the tract. While there may have been flaws in the record title of those who thus claimed to own the lots in controversy and other portions of the tract, yet the acts aforesaid amounted to a denial of the alleged trust and they were of such character that they should have inspired prompt and decisive action on the part of those who claimed to be beneficiaries of the trust as soon as they discovered authentic evidence of their alleged rights. We conclude, therefore, that in view of the open denial of the trust for more than twenty years, the members of the Re-Organized Church have acquiesced too long in the assertion of adverse rights to the property in controversy, to be now heard to complain, even if we should concede that they were not guilty of laches before the deed to the Cowdery children was

discovered and placed of record and before the alleged trust affecting the property became generally known.

With reference to the contention that laches is not available as a defense to this action because the defendants have not occupied the premises in controversy continuously for a period of ten years since the inception of their title—it seems sufficient to say, that the plea of laches is frequently available in equity even when the defendant has not been in possession of the property sued for, for a sufficient period to confer a title by the statute of limitations. Under a variety of circumstances, especially where property has rapidly appreciated in value, or it has been improved by those in possession, or where the rights of third persons will be seriously affected by a decree, courts of equity will refuse to interfere even when the facts are such that the plea of the statute of limitations could not be maintained at law. *Wetzel et al.*, v. *The Minnesota Railway Transfer Co.*, —— U. S. App. ——, Id. 12 C. C. A. 490; *Galliher* v. *Cadwell*, 145 U. S. 368, and cases there cited. This principle applies in suits to enforce an express trust, where the trust has been openly denied, as well as in suits to enforce a constructive trust. In the case at bar it is conceded that besides paying taxes the defendants built a church on the lots in suit in the year 1882 and that they have occupied it continuously since that day as a house of worship. No notice of an existing adverse claim to the property was given to the defendants while the structure in question was being erected, nor for more than five years thereafter, although, as it seems, a congregation of the Re-Organized Church occupied another church edifice in close proximity to the premises and were doubtless well aware of the improvements that were being made on the property in controversy. Besides, the title by which the defendants claim to hold the lots in suit is the same title by which a much larger tract of land within the city of Independence has apparently been held for more than forty years, and the relief prayed for as against the defendants, cannot be granted, without impairing the value and clouding the record title to much other valuable property situated within the city. Under these circumstances, we think that laches is a good and sufficient defense to the action, even though the defendants did not actually occupy the lots in controversy for the full term of ten years before this suit was commenced.

In accordance with the views herein expressed, the decree of the circuit court will be reversed and the cause will be remanded with directions to dismiss the bill of complaint.

Filed September 30, 1895.

A true copy.

Attest:

Clerk U. S. Circuit Court of Appeals, Eighth Circuit.

And on the thirtieth day of September A. D. 1895, in the record of the proceedings of said Circuit Court of Appeals, is a decree in said cause in the words and figures following, to-wit:—

United States Circuit Court of Appeals, Eighth Circuit. May Term, 1895. Monday, September 30, 1895.

The Church of Christ at Independence, Missouri, Richard Hill, Trustee, Richard Hill, Mrs. E. Hill, George Frisbie, Mrs. E. Frisbie, Miss Nannie Frisbie, Daniel Bauder and G. D. Cole as members of and doing business under the name of the Church of Christ at Independence, Missouri, Appellants,
No. 516 vs.
The Reorganized Church of Jesus Christ of Latter Day Saints, Appellee.

Appeal from the Circuit Court of the United States for the Western District of Missouri.

This cause came on to be heard on the transcript of the record from the Circuit Court of the United States for the Western District of Missouri and was argued by counsel.

On consideration whereof, it is now here ordered, adjudged and decreed by this Court, that the decree of the said Circuit Court, in this cause, be, and the same is hereby reversed, with costs; and that the Church of Christ at Independence, Missouri, Richard Hill, Trustee, Richard Hill, Mrs. E. Hill, George Frisbie, Mrs. E. Frisbie, Miss Nannie Frisbie, Daniel Bauder and G. D. Cole as members of and doing business under the name of the Church of Christ at Independence, Missouri, have and recover against the Reorganized Church of Jesus Christ of Latter Day Saints the sum of Three Hundred Forty and 65-100 Dollars for their costs in this behalf expended and have execution therefor.

It is further ordered that this cause be and the same is hereby remanded to the said Circuit Court with directions to dismiss the bill of complaint.

September 30, 1895.

And on the twenty-first day of November A. D. 1895, a petition for rehearing was filed in said cause in the words and figures following, to-wit:—

United States Circuit Court of Appeals, Eighth Circuit.

The Church of Christ at Independence, Mo., et al., Appellants,
No. 516 vs.
The Reorganized Church of Jesus Christ of Latter Day Saints, Appellee.

APPELLEE'S MOTION FOR REHEARING.

Appellee moves the court for a rehearing:—

1. Because the court misconceived the case in saying that the trust in controversy could be established at law. and in overlooking the proposition that a court of equity is always open to impress a legal title with a pious use.

2. Because the court erred in directing a dismissal on a defense not pleaded, i. e., adequacy of a remedy at law, instead of following the settled rule of remanding with leave to amend the bill.

3. Because the court, in applying the doctrine of laches to a case where land is impressed with a pious use, ignored and overlooked the fact that the doctrine, upon grounds of public policy, is never applied to such a case.

FRANK HAGERMAN, for Appellee.

I, Frank Hagerman, do hereby certify that I am counsel for appellee; that the foregoing motion for rehearing and suggestions in support thereof are made in sincerity and good faith and in my opinion said motion is well founded in point of law.

FRANK HAGERMAN.

ENDORSED: "Filed Nov. 21, 1895. John D. Jordan, Clerk."

And on the ninth day of December A. D. 1895, an opinion of said United States Circuit Court of Appeals on the Petition for rehearing was filed in said cause in the following words, to-wit:—

UNITED STATES CIRCUIT COURT OF APPEALS

EIGHTH CIRCUIT.

No. 516.—December Term. A. D. 1895.

The Church of Christ, at Independence, Missouri, et al., Appellants,
vs.
The Reorganized Church of Jesus Christ of Latter Day Saints, Appellees.

Appeal from the Circuit Court of the United States for the Western District of Missouri.

ON PETITION FOR REHEARING.

per curiam.

It is contended in behalf of the Reorganized Church that the doctrine of laches as heretofore applied is not applicable to the case at bar, because a bill of complaint was filed to enforce a charitable trust. It is urged in substance that because the land in controversy was originally acquired for the benefit of a religious society, it necessarily became impressed with a charitable trust and that no lapse of time, however great, will serve to bar an action that is brought to enforce a trust of that nature. The same proposition was stated in the original brief, filed by counsel for the appellee, one or two authorities were cited in its support and the proposition was duly considered. Little dependence, however, seemed to be placed on the proposition in the oral argument, and for that reason we did not consider it necessary to discuss the subject in the opinion heretofore filed. But inasmuch as counsel for the appellee have erroneously assumed in the petition for a rehearing that the doctrine which was invoked to avoid the defense of laches was entirely "overlooked and ignored" it now becomes necessary to notice it.

It is a general rule that laches on the part of its officers will not be imputed to the government and that no period of delay on the part of the sovereign power will serve to bar its right either in a court of law or equity when it sees fit to enforce it for the public benefit. *United States* v. *Kirkpatrick*, 9 Wheaton, 720; *Gaussen* v. *United States*, 97 U. S., 584; *United States* v. *Insley*, 130 U. S. 263; *United States* v. *Winona & St. Peter R. R. Co.* 67 Fed. Rep. 969, 971. There are some English cases in which the Court of Chancery has interfered with the management of a certain class of charitable

trusts, although the grievances complained of were of long standing. The *Attorney General* v. *Mayor de Coventry*, 2 Vernon's Chan. Rep. 2; *Attorney General* v. *Mayor of Bristol*, 2 Jacob & Walker's Rep. 294; *Attorney General* v. *Christ's Hospital*, 3 Mylne & Keen's Rep. 344; *The Attorney General* v. *The Corporation of Beverley*, 6 DeGex M. & G. Rep. 256. See also *Incorporated Society, etc.* v. *Richards*, I Connor & Lawson's Rep. 58. In one or two of these cases laches was relied upon, in part, as a defense, and with reference thereto the remark was made, in substance, that when the court sees clearly the intention of the founder of a charity, no argument founded on length of time can prevail against it. These were cases, however, in which information had been filed by the Attorney General to enforce clearly defined charitable trusts in which the public had some interest. With one exception the trusts were not denied, and the suits were against certain municipal corporations who held property that had been devoted to certain charitable uses, which was being administered in a manner not authorized by the founder of the charity. Besides, in these cases, no sufficient reason founded on lapse of time was shown, why the abuses complained of should not be corrected. In this country the doctrine is well established that although laches is not ordinarily a defense to a suit brought by the government, yet that it is a defense, even as against the government, when it brings a suit solely for the benefit of a private individual, or when it sues to enforce a right of its own growing out of some ordinary commercial transaction. *United States* v. *Beebe*, 127 U. S. 338; *Cooke* v. *United States*, 91 U. S. 389; *Union Pacific R. R. Co.* v. *United States*, 67 Fed. Rep. 975, 979. While it is no doubt true that charitable trusts are highly favored by the law, and that a court of equity will sometimes entertain a bill after a long period of delay to correct the administration of a charitable trust which is being administered contrary to the plain intent of the founder, yet it is equally true that when the intent of the founder of a charitable trust is not clearly manifest, length of time and aquiescence in a particular mode of administration will always be taken as good evidence of the founder's purpose and of the manner in which the trust ought to be administered. *Attorney General* v. *Mayor de Coventry*, 2 Vernon's Chan. Rep. 396, 398. *The Dublin Case*, 38 N. H. 459, 512. To this extent do the authorities go but no further.

We fail to see that the principle which may fairly be extracted from the decisions is sufficient to sustain the broad contention of the Reorganized Church that the doctrine of laches cannot be invoked by the appellant as a defense. It is most probable, we think, that very much of the property described in the alleged deed of Edward Partridge to the Cowdery children was intended for secular, rather than for pious uses, while it is not certain that any portion of the property was intended to be used exclusively to promote the cause of religion. The suit at bar cannot be regarded as a suit to enforce the due administration of a charitable trust in the ordinary sense. On the contrary, it is a controversy between rival church sects or congregations to obtain the possession of certain real estate to the end that they may each devote it, in their own way, to pious uses. It is one of those controversies, therefore, in which the public at

large have no immediate concern. Moreover, as the State of Missouri is not a partisan in matters of faith, but guarantees perfect religious freedom to all its citizens, and is precluded by its constitution (Art. 2, Sec. 7) from lending aid or support either "directly or indirectly" to "any church, sect, or denomination of religion," it is manifest that the state could not maintain a suit to recover the property in controversy for the use and benefit of the Reorganized Church either upon the theory that it is the duty of the state to see that property conveyed to pious uses is faithfully administered or upon any other theory. The state, and the public whom it represents, have no more interest in the pending litigation than they have in any other suit between private parties because there is no public interest at stake to be either conserved or protected.

In view of these considerations and the state of facts disclosed by the present record, it is impossible to assign any substantial reason why the doctrine of laches should not be applied to the case at bar precisely as it is applied in other suits between private persons.

Such in brief are the views that were entertained when the former opinion was announced and that are still entertained. It may be conceded that because the members of the Church of Jesus Christ of Latter Day Saints, commonly called Mormons, were driven from the state by force, and subsequently became widely scattered, and divided into factions by different revelations of the divine will, therefore the doctrine of laches should be less rigidly enforced than it would be under other conditions. But neither the circumstances last mentioned, nor the fact that the property if recovered is to be devoted to pious uses, are sufficient to relieve the Reorganized Church from all blame because of its long delay and want of diligence. That branch of the Mormon Church termed Hedrickites, who are now in possession of the property, took steps to recover it as far back as the year 1869 and probably some years prior to that date. Acting on the assumption, no doubt, that the Pool title to the 63 acre tract was valid and would probably be upheld by the courts, they saw fit to purchase that title to the premises in controversy. They have since paid all the taxes on the property, have erected a house of worship thereon and have been in the undisturbed possession thereof for more than ten years up to the present day. In the meantime, that is to say for more than twenty-five years last past, The Reorganized Church has not only been a duly organized religious society, having bishops and councils for the management of its affairs, but it has had ample opportunity to assert and enforce its claim to the property in question either in the local or the Federal Courts. It has failed to take any action in that behalf until it is too late to entertain its claim without doing gross injustice to others, and under such circumstances a court of equity will not interfere.

With reference to the suggestion contained in the petition for a rehearing that the degree of the Circuit Court should have been reversed with leave to amend the bill, it is only necessary to say, that such action would probably have been taken but for the fact that it seemed evident, after a full consideration of the testimony, that the

bill of complaint could not be so amended as to avoid the defense of laches. For that reason it was deemed best to avoid further litigation and expense by directing the Circuit Court to dismiss the bill.

We also note that the thought intended to be expressed by a single paragraph found in the original opinion seems to have been misconceived by counsel for the appellee. In concluding the discussion of the first question considered in the opinion, this expression was used: "Moreover, it would seem that the settlement of that question will at the same time determine upon what trust, if any, the property in controversy is now held." Counsel for the appellee have assumed in a petition for a rehearing that by this is meant that a court of law is the proper forum in which to determine questions of trust; but nothing could be more at variance with the thought intended to be expressed. We merely intend to suggest that if the person, who as the bill showed, held the legal title to the land in controversy, in trust for the Reorganized Church, should bring an action of ejectment to recover the property from the pretended trustee in possession, who, as the bill alleged, had no title, but was merely a trespasser, and should succeed in such suit in recovering the possession, there would probably be no occasion thereafter for asking a court of equity to determine who was the proper beneficiary. The remark was intended to emphasize the fact according to the averments of the bill there was no apparent difficulty in maintaining a suit in ejectment which would settle the entire controversy, inasmuch as the bill alleged in substance that the legal title in trust was vested either in the heirs of Blakeslee, or in the present bishop of the Reorganized Church, whereas the parties in possession of the property were alleged to be mere trespassers. A person who holds the legal title to property, in trust for a religious sect or congregation, may doubtless maintain an action of ejectment against a person in possession who has no title, either legal or equitable. We think that the paragraph of the opinion in question, when judged by the context, is not liable to mislead and is not subject to any just criticism.

The petition for a rehearing is accordingly denied.

Filed December 9, 1895.

And on the ninth day of December A. D. 1895, in the record of the proceedings of said Circuit Court of Appeals, is an order denying the Petition for Rehearing in the words and figures following, to-wit:—

United States Circuit Court of Appeals, Eighth Circuit. December Term, 1895. Monday, December 9, 1895.

The Church of Christ at Independence, Missouri, et al., Appellants,
No. 516. vs.
The Reorganized Church of Jesus Christ of Latter Day Saints, Appellee.

Appeal from the Circuit Court of the United States for the Western District of Missouri.

This cause came on this day to be heard upon the petition of Appellee, above named, for a rehearing.

On consideration whereof, it is now here ordered by this court, that the petition of Appellee for a rehearing in this cause, be, and the same is hereby denied.

December 9, 1895.

United States Circuit Court of Appeals, Eighth Circuit.

I, John D. Jordan, Clerk of the United States Circuit Court of Appeals, Eighth Circuit, do hereby certify that the foregoing 735 pages contain a true copy of the record as printed by stipulation of parties and on which the cause was heard in this court and full, true and complete copies of all the proceedings and record entries, including the opinions of said Circuit Court of Appeals in the case of The Church of Christ at Independence, Missouri, et al., Appellants vs. The Reorganized Church of Jesus Christ of Latter Day Saints, Appellee, No. 516, May Term, 1895, as the same remain upon the files and records of said United States Circuit Court of Appeals.

In Testimony Whereof, I hereunto subscribe my name and affix the seal of said United States Circuit Court of Appeals, at the City of St. Louis, Missouri, this eighteenth day of December A. D. 1895.

(Seal)

JOHN D. JORDAN, Clerk U. S. Circuit Court of Appeals Eighth Circuit.

Not in Oct 96 - [illegible]

Office Supreme Court, U. S.
FILED
JAN 14 1896
JAMES H. McKENNEY,
CLERK.

Not in Oct 96 - [illegible]

IN THE SUPREME COURT OF THE UNITED STATES.

OCTOBER TERM, 1895.

(No. 849)

THE CHURCH OF CHRIST AT INDEPENDENCE, MISSOURI, ET AL., APPELLANTS AND RESPONDENTS.

vs.

THE REORGANIZED CHURCH OF JESUS CHRIST OF LATTER DAY SAINTS, APPELLE AND PETITIONER,

PETITION FOR CERTIORARI.

STATEMENT AND BRIEF FOR PETITIONER.

FRANK HAGERMAN,
P. P. KELLEY, AND
SMITH M'PHERSON,
SOLICITORS FOR PETITIONER.

IN THE SUPREME COURT OF THE UNITED STATES.

OCTOBER TERM, 1895.

(No. _____)

THE CHURCH OF CHRIST AT INDEPENDENCE, MISSOURI, ET AL., APPELLANTS AND RESPONDENTS.

vs.

THE REORGANIZED CHURCH OF JESUS CHRIST OF LATTER DAY SAINTS, APPELLE AND PETITIONER,

PETITION FOR CERTIORARI.

STATEMENT AND BRIEF FOR PETITIONER.

STATEMENT.

The Reorganized Church of Jesus Christ of Latter Day Saints as complainant, filed in the Circuit Court of the United States for the Western District of Missouri a bill in equity (Rec. 4–11) against the Church of Christ at Independence, Missouri, Richard Hill as Trustee, and other persons as members of the defendant church, the general nature and object of which was to establish a trust in and recover certain church property at Independence, Jackson County, Missouri.

The property so sought to be charged and recovered is generally known as the "Temple Lot." The bill was amended (Rec. 27) so as to aver that complainant had only an equitable interest and not the legal title, and after an answer (Rec. 11–25) with no suggestion therein of a defect of parties or claim of an adequate remedy at law, there was a general replication. (Rec. 25.) Much testimony (Rec. 37–679) was taken upon both sides. An elaborate and able opinion was written by Judge Philips (Rec. 681–707) and reported

in 60 Fed. Rep., 937, in which the entire merits of the controversy were gone into, and upon which a decree (Rec. 28–31) was entered in favor of the complainant.

Defendants appealed to the Circuit Court of Appeals for the Eighth Circuit (Rec. 33–37) to which court the original exhibits were, pursuant to rule of that court, duly certified. (Rec. 708.) Printed abstracts having been used in the Circuit Court, by stipulation of counsel and order of the Court of Appeals (Rec. 1, 2) the same were there used in lieu of a transcript of the original testimony.

The Circuit Court of Appeals, without any reference to the merits, reversed the decree below and remanded the cause with directions to dismiss the bill (Rec.) upon two grounds: 1. That equity had no jurisdiction because there was an adequate remedy at law; and 2. Because complainant was guilty of laches. (See also 70 Fed. Rep. 179.) A petition for rehearing (Rec.) was duly filed and overruled (Rec.), and an application for a writ of certiorari is now made to this court to certify the case here.

The bill as amended (Rec. 4–11, 27) averred substantially these facts:—

1. Complainant, a corporation organized under the laws of Iowa in 1891, is the equitable owner of certain lots in Independence, Missouri, known as the "Temple Lot," and defendants are in possession thereof claiming title thereto.

2. The common source of title is Edward Partridge who on December 19, 1832, acquired the legal title thereof; but the same was acquired and bought by him with the money of the Church of Latter Day Saints, then of Kirtland, Ohio, contributed for that purpose.

3. March 28, 1839, Partridge by deed conveyed the property to Jane Cowdery, Joseph Smith Cowdery, and John Cowdery, infant children of Oliver Cowdery, in trust for the original Mormon Church, reciting therein the trust upon which Partridge held the title. The Cowdery children died and on May 29, 1886, their mother, then a widow, made conveyance of her interest therein to her daughter, Marie Louise Johnson, who, with her husband, on June 9, 1887, conveyed all her interest to George A. Blakeslee as Bishop of and in trust for complainant's church. In 1890 Blakeslee died and E. L. Kelley succeeded him as such Bishop.

4. On May 5, 1848, Lydia Partridge, widow of Edward Partridge, then deceased, and three of his children—Eliza M., Emily D., and Caroline — made a quitclaim deed of the property to James Pool, the latter taking with notice of the trust. By mesne convey-

ances the Pool title, with notice of the facts to each grantee, passed to Granville Hedrick as Trustee for the use of and in trust for the Church of Christ, of Latter Day Saints, which in truth was complainant's church. Afterwards Hedrick died, and the Circuit Court of Jackson County, Missouri, in pursuance of State statute, in an ex parte proceeding, appointed Richard Hill as trustee and as the successor of Hedrick, and any title and ownership he now has in and to said premises is as the holder in trust for complainant.

5. The Church of Jesus Christ of Latter Day Saints was organized in New York in 1830, and in 1831 removed to Kirtland, Ohio.

In 1832 a branch was established at Independence, Missouri; afterwards at Far West, Missouri; and thereafter at Nauvoo, Illinois; and complainant's church has in the United States now four hundred branches or local churches, with a total membership of 25,000, and included therein is a church at Independence with 700 members.

Defendant's church was not organized and did not come into existence until 1863.

6. Complainant's church is the same church, teaching the same doctrines and belief, as did said original church of Kirtland, Ohio, and is the same church association in fact, except that it has been incorporated and taken the name of Reorganized Church of Jesus Christ of Latter Day Saints, a reorganization taking place because from 1844 to 1846 the Original Church became divided into various factions, many of which taught doctrines at variance with and contrary to the doctrines of the Original Church, but all members who adhered to the original faith banded themselves together into complainant's Reorganized Original Church. Defendant's church has less than twenty members and denies the doctrine and faith of the Original Church.

7. Ever since Partridge in 1832 purchased the Temple Lot the property has been generally and publicly known and reputed to be church property, and from 1832 to 1886, with the exception of the time that it was occupied by the Original Church, it was vacant and unoccupied, and was recognized for a great many years by the public authorities, whose duty it was to assess and collect taxes, as church property and not taxable.

8. Complainant asks that all interest owned or claimed by defendants or any of them be declared to be held in trust for it, and the defendants be decreed to convey to it all title claimed by them, and that upon final hearing it may have a decree declaring and reciting that the property belongs to it free and clear of all rights,

claims, and interests of defendants, and for such other and further relief as the equity of the case may require.

The answer (Rec. 11–25) consisted of specific denials and admissions, claimed the property as the successor of the Original Church and pleaded the statute of limitations, and that defendants claimed title under innocent purchasers for value; but there was no such defense pleaded as that there was an adequate remedy at law or that there was any defect of parties. Among other things the answer claimed that the defendants' church was the true follower of the Book of Mormon, while complainant's church was identical in its teachings with that headed by Brigham Young in Utah, and had abandoned the original faith by teaching and practicing polygamy.

The decree of the Circuit Court (Rec. 29, 30) was that complainant, in its corporate capacity, included the whole membership of the Original Church wherever found and was its successor, for which Original Church Edward Partridge acquired the property in trust, and as such it was entitled to the ownership and possession thereof.

The following is a general outline of the facts disclosed by the proofs:—

1. On April 6, 1830, Joseph Smith and others, in New York, organized a church of which he afterwards became president, prophet, and leader, and so continued until his death, June 27, 1844. This church was an unincorporated association, and was first located at Kirtland, Ohio, where a temple was erected and the general business transacted.

A settlement was also made at Independence, Jackson County, Missouri, from whence, by mob violence, the members were driven into Caldwell County, Missouri, in 1834, locating at and near a place called Far West. In 1838, and in the spring of 1839 these people were, by orders of Governor Boggs, who as a private citizen led the mob in Jackson County, and upon the penalty of extermination if they refused to go or ever returned, driven from the State and located at Commerce (afterwards called Nauvoo), in Illinois.

2. The Original Church thus formed adopted a code for its government, as to doctrine and tenets, established upon the Holy Bible, Book of Mormon, and certain claimed revelations from God, afterwards compiled with acts and resolutions of the church, and published under the title "Book of Doctrine and Covenants," the editions of 1835, 1845, 1852, and 1876, being in evidence as exhibits.

The doctrine and tenets presented, among others, the following: Faith, repentance, baptism for remission of sins, laying on of hands for confirmation, industry, sobriety, and virtue; gather-

ing together for mutual aid, advice, and assistance; advising all to marry but prohibiting more than one wife; resurrection of the dead, and eternal judgment.

The government of the church was vested in a presidency consisting of a president and two counselors; a quorum of twelve called "apostles," and having a president; a quorum of seventy or quorums of seventies, each having a president, and when more than one quorum of seventies, a president of the presidents of the quorums of seventies, elders, priests, teachers, and deacons, and a bishop who was the financial officer of the church. These, with the members not holding office, at the central place and at the several branches, formed one complete, whole church.

From its organization down to the death of Joseph Smith on June 27, 1844, this church, with its doctrines and officers, continued without change or any dissensions. It was variously called the "Church of Christ," "Church of Christ of Latter Day Saints," and "Church of Jesus Christ of Latter Day Saints," but all meaning and standing as and for the organization of 1830, no changes having been made therein or additions thereto, except such revelations as were transmitted to and adopted by the church in accordance with church rules, and published in the Book of Doctrine and Covenants.

3. On June 27, 1844, Joseph and Hyrum Smith were killed by mob violence at Carthage, Illinois. Joseph Smith, at the date of his death, was the president, and Hyrum Smith was one of his counselors. Sidney Rigdon, the other counselor, was at the time, absent in the East, and there arose contentions among officers as to who should become the president and leader. The true successor was Joseph, eldest son of Joseph Smith, because being the first-born of his father, he was according to the church doctrine his heir and legitimate successor; and, by revelation to the father, adopted by the church, he had been appointed as such, and that he had in fact been baptized, anointed, and declared the successor. Young Joseph being but twelve years of age, and too young to rule a regency was suggested. A majority of "The Twelve" assumed that that quorum was the temporary head of the church and its president, Brigham Young, temporarily the chief officer. In this view, a majority of the church located at Nauvoo concurred, but later, Young who had led the party that followed him as far west as Kanesville, Iowa Territory, and then to Utah, usurped the presidency, and became the permanent head of that branch of the church.

4. During the time intervening between 1844 and 1846 there

came the break or disintegration of the church. Sidney Rigdon, one of the counselors of Joseph Smith in the presidency, John E. Page, Lyman Wight, William B. Smith, three of "The Twelve" and many officers and thousands of members, refused to adopt the view taken by Young and his followers.

J. J. Strang, an old member, established headquarters in Wisconsin, claiming to be the true head. William B. Smith established headquarters, and claimed to be the head, as did also Lyman Wight, and many others. Each faction claimed to be the true church, and the original membership was thus divided. Later in 1864, Granville Hedrick, who had been a member of the church as early as 1842, and later took part with the Reorganized Church, complainant herein, started the society represented by defendants.

Brigham Young led his followers to Utah, and the organization there formed will be called the Utah Church.

Granville Hedrick organized in McLean County, Illinois, under the name of the "Church of Christ" and claimed to be the true succession. His followers were called "Hedrickites," and the defendant church claims to be a part thereof.

5. In 1852 various branches or factions of the church which had remained true to the original faith and which had refused to follow Brigham Young's lead, called a conference at Beloit, Wisconsin, for consultation and then and there the church was reorganized, with the doctrines as taught up to the time of Joseph Smith's death and the disorganization of the leading quorums of the church. This organization believed that Joseph, the son, was the legitimate successor of his father and would at the proper time assume his proper duties and functions. In this belief they continued until, at a convention of its members, held at Amboy, Illinois, on April 30, 1860, Joseph Smith, then a matured man, was formally ordained as president and the church became fully organized with the same offices as existed in the original church, and its membership consisted of those of the original church who refused to follow Brigham Young. They then numbered about 7,000, at the time of trial about 25,000, and now number 50,000. The name adopted was "The Reorganized Church of Jesus Christ of Latter Day Saints," and this is the complainant herein.

It is unnecessary to consider any other division of the church as none other has made any claim to the property, nor does it appear that there is any other division which adheres to the faith of the Original Church.

6. The law is that where a church acquires property, and afterwards divides into factions, that body which adheres to the original

faith, even if in the minority, succeeds to the property. This being true, the great question in the case is whether the church of complainant, or that of the Hedrickites, or that of Utah, adheres to the original faith.

That the doctrine of the Original Church is the identical doctrine, teaching, and belief of complainant's church is overwhelmingly established by the evidence.

And if we omit the claim of defendants that the Original Church taught polygamy, we may say such evidence is without dispute. More than this, the same officers and the kind of organization are provided for by the complainant.

In addition to this, Joseph Smith, now president of complainant's church, and a son of Joseph Smith, founder of the Original Church, was publicly designated, proclaimed, and set apart, according to the church doctrine as his successor in office, and the church books taught that the position thus descended.

7. The Utah Church disregarded the doctrine of the Original Church in this: it taught and practiced the doctrine of polygamy, of blood atonement, of Adam-God worship, and instead of following the laws of the church regularly adopted by the quorums and body of the church, and published in the Book of Doctrine and Covenants, there was substituted in its stead the rule "that the members of the church should obey the Council of Twelve in all things."

The Hedrickites or defendant church, consisting of 13 or 14 members, and never having a membership exceeding 100, differs from and fails to adhere to the Original Church faith and organization in this: it fails to conform to the organization of the Original Church; it fails to provide for or to contemplate but rejects the idea of a Presidency consisting of a president and two counselors, a Twelve and Seventies. It has no apostles. It has no prophets, and claims no power in its president as a prophet, seer, or revelator. Its president is created by vote. More than all this it rejects and ignores all the revelations and acts of the church in general after 1833, 1834, and 1835 It rejects the law relating to tithes and offerings, the doctrine of baptism for the dead, and the Book of Doctrine and Covenants. Indeed, there appears to be no standard of doctrine, no church books, and no records, so far as is disclosed by the testimony.

The doctrine of polygamy was discountenanced by the Original Church, and the doctrine taught was monogamy.

No revelation was valid unless submitted to and adopted by a vote of the church.

The overwhelming weight of evidence is that polygamy was not taught, but on the other hand publicly denounced.

The Utah Church, in 1852, had presented to it by Brigham Young a purported revelation claimed to have been received by Joseph Smith for the adoption of polygamy, and that church then adopted the practice. The date of the revelation was said to be 1843.

But as will be hereafter shown this claim was a barefaced fraud, invented to retain Young in power.

The most that can be said of the Utah Church claim from any standpoint of the evidence accepting without limit statements of defendant's witnesses is not that polygamy was a church doctrine, but that Joseph Smith privately taught it.

The Utah Church claims the temple lot as the sacred ground for its church. Its departure from the original faith prevents it from making any legal claim, but its active participation in the case for the defendant and a letter of the former president of defendant church admitting the receipt of aid from Utah produces a conviction that the defendants, with a membership of thirteen before the withdrawal of Hall and his family are not contesting the complainant's claim, representing a membership of 25,000, except as a blind and for the benefit of the Utah Church; so the trial court found.

8. So much then for the parties and the church doctrine before proceeding with a history of the property. A revelation adopted by the church declared that it was to acquire in Independence these lots for the purpose of the erection of a temple for public worship as early as 1831, and that surrounding land was to be acquired and peopled by the members of the church.

Therein is found the ground for the contention of every member of the original society. Upon this subject all are united in belief.

Accordingly funds were raised by contributions from church members and placed in the hands of one Partridge, then bishop and financial officer of the church. Partridge came West and acquired the property in 1832, taking the title in his own name to sixty-three acres which included the Temple Lot.

The title had to be taken by an individual because the state constitution then in force forbade an incorporation for church purposes.

Joseph Smith with others at his direction came to Independence and held services on the ground, dedicating the Temple Lot.

By everyone since that time, the property has been known as the "Temple Lot" and the place to which the Mormons expected to

return. Until 1882 it stood as vacant and unoccupied property and was not claimed by any individual.

In 1833 the church followers were driven from Jackson County into Caldwell County, and in April, 1839, by order of the Governor, and after some bloodshed, they were driven from the State. The Governor's order was to exterminate all members of the church.

On the eve of going in 1839, and as if inspired by the thought that the title should be saved, and that it was unsafe to trust the title to anyone whose life was in danger, Partridge made a deed to the three infant children of Oliver Cowdery, March 25, 1839, but not recorded until 1870, in which he declared the trust in the strongest terms, especially mentioning the Temple Lot.

In 1841 Partridge died, leaving a widow and five children.

In 1848, one Pool, then living in Jackson County, went to the home of the Partridge heirs and secured a deed from the widow and three of the five children, purporting to quitclaim the whole of the sixty-three acres. Pool was then in debt, and no sooner had he obtained the deed than it was seized by creditors and sold on execution. The Pool deed was not properly acknowledged and hence never legally recorded.

In 1851 the land was platted into town lots, and the lots comprising the Temple Lot were neither claimed nor occupied until 1882 when defendants fenced it, and in 1887 erected a small church building thereon, worth probably one hundred dollars.

Various mesne conveyances were made until about 1867, when one Eaton and one Hedrick began to buy up the outstanding titles under Pool to the Temple Lot, and about the same time the Partridge deed was put on record. Titles acquired by Eaton and Hedrick were vested in Granville Hedrick as trustee for the Church of Christ of Latter Day Saints—the name of the Original Church; afterwards Hedrick died and defendant, Richard Hill, was in an ex parte proceeding in the state court substituted as trustee. In 1887 Bishop Blakeslee of complainant's church received a deed for the property from the heirs of the Cowdery children, and served a written notice of the claim of his church on Hill; Blakeslee in 1890 died without conveying. In 1891 the complainant's church was incorporated under the laws of Iowa, and thereupon filed this bill.

Hill in his testimony admits that he holds the property for the Original Church, but claims that the Hedrickites are a part thereof.

ARGUMENT.

1. COMMON SOURCE OF TITLE.

It is averred in the bill (Rec. 5) and admitted in the answer (Rec. 13), that on December 19, 1832, Edward Partridge acquired the legal title to the land in question, the complainant claiming that he took it in trust for the Original Church (Bill, Rec. 5), and the defendants denying that fact. The deed to Partridge (Rec. 266) is in fee simple, disclosing nothing as to any trust, but, as said by Judge Philips (Rec. 688), it is a plain principle that "the legal title may be impressed with a use for a third person by evidence *aliunde*."

We proceed to consider whether the property was in fact of a trust nature.

2. PARTRIDGE IN FACT ACQUIRED THE PROPERTY IN TRUST, AND THIS IS SHOWN INDEPENDENTLY OF ANY DEED.

Of this there cannot be the shadow of a doubt. Upon this subject Judge Philips (Opinion, Par. 111, Rec. 688, 689) clearly states the case as established by the proofs.

An understanding of the facts will only result in clearly demonstrating the correctness of the opinion, and it is surprising that the facts are so clearly established when it is remembered that the trust was created more than sixty years prior to the trial, and the Utah Church, which was behind the defense in the case, (Ev. Littlefield, Rec. 364, 365; Priscilla Staines, 416; Letters of Hall, 513–515; see conduct of Joseph F. Smith, one of the First Presidency of the Utah Church, Rec. 375, 376, 378,) carried off and kept the records of the Original Church, (Ev. Whitehead, Rec. 62, 63, 67, 68; Blair 165; Woodruff, 323,) so that they were concealed from the inspection of the court.

The Original Church was founded in New York, upon April 6, 1830, and Joseph Smith became the leader, president, and prophet thereof. It was an unincorporated, religious body, and was first located at Kirtland, Ohio, where a temple was built and the general work directed. Of the church Partridge was, in fact, the Bishop (Ev. Woodruff, Rec. 326; William B. Smith, 124; H. Rathbun, Sr., 247), and as such was the financial officer, who was to hold the titles to all church properties. (Ev. W. B. Smith, Rec. 124; Stebbins, 199.) At an early date there was a revelation, formally adopted by the church and published in the Book of Doctrine and Covenants (Ex. E. Par. 1, Sec. 27), which (Rec. 253, 254) is in this language:—

"Hearken, O ye elders of my church, saith the Lord your God, who

have assembled yourselves together according to my commandments, in this land which is the land of Missouri, which is the land I have appointed and consecrated for the gathering of the saints: wherefore this is the land of promise, and the place for the city of Zion. And thus saith the Lord your God, if you will receive wisdom here is wisdom. Behold the place which is now called Independence, is the center place, *and the spot for the Temple is lying westward upon a lot which is not far from the courthouse: wherefore it is wisdom that the land should be purchased by the saints;* and also every tract lying westward, even unto the line running directly between Jew and Gentile. And also every tract bordering by the prairies, inasmuch as my disciples are enabled to buy lands. Behold this is wisdom, that they may obtain it for an everlasting inheritance."

In revelation 18 (Book of Doctrine and Covenants, page 130) is this:—

"And let my servant Sidney Rigdon consecrate and dedicate this land, and the *spot of the temple*, unto the Lord."

It is a conceded fact that the Temple Lot referred to in these revelations is that which is here in controversy (Ev. Rathbun, Rec. 254; Woodruff, 326; Hill, 476, 477), and in the church book, among the exhibits, *Times and Seasons*, page 662, there is quite an article upon the subject.

Every follower of the church, no matter how far he has departed from the original religious faith, nor to what faction he may belong, believes implicitly in this revelation, and that the temple site is the central place of the church upon which the temple is to be erected.

It is not a question as to whether this ought to be the belief of any church; it is sufficient to say that it is, and therein is found the reason for the vigorous contest for the possession of this particular property actually worth a very small sum in money value.

It was in fact publicly dedicated by Joseph Smith, the latter in 1833, writing in the official church paper, *Times and Seasons*, Vol. 5, Exhibit O, at page 450:—

On the third day of August, the spot for the Temple, a little west of Independence, was dedicated in presence of eight men, among whom were myself [Joseph Smith], Sidney Rigdon, Edward Partridge, W. W. Phelps, Oliver Cowdery, Martin Harris, and Joseph Coe. The 87th Psalm was read, and the scene was solemn and impressive. On the 4th I attended the first conference in the land of Zion. It was held in the house of Bro. Joshua Lewis, in Kaw Township, in presence of the Colesville branch of the church. The Spirit of the Lord was there. On the 7th I attended the funeral of Sister Polly Knight, the wife of Joseph Knight, Sen. This was the first death in the church in this land, and I can say a worthy member sleeps in Jesus till the resurrection.

After the church was located at Kirtland, Ohio, a settlement

was made in Jackson County, Missouri. Pursuant to the revelation just quoted, money was contributed by members of the church, and with this Partridge came to Jackson County for the purpose of acquiring property, and it was the general understanding of the church then, and has been since of every faction or division thereof, that the property in controversy was acquired with the church funds thus contributed. The record abounds with proofs to this effect. (Ev. W. B. Smith, Record 124, 125, 128, 129; W. W. Blair, 169, 170; Emily D. P. Young, 209; John Taylor, 220–222; Hiram Rathbun, Sr., 253, 254, 263–265; John H. Thomas, 288, 290; W. Woodruff, 326, 327; J. C. Kingsbury, 366; Jos. B. Noble, 397; Richard Hill, 476, 477, 478; John H. Taylor, 481.) And while it is true that no one testifies that he saw Partridge actually pay the money, yet he came to Jackson County for that purpose (Ibid.) and was actually there. (Ev. Rathbun, Record 247, 248; Emily D. P. Young, 210; Robert Weston, 204, 282, 283; John Taylor, 220, 221.) From 1831 to 1833 church meetings were held on the lot; (Ev. Rathbun, Record 247, 248; Taylor, 220;) To show how clearly the trust was proven, permit us to review the testimony at some length. Wm. B. Smith, eighty years of age (Record 123), a brother of Joseph Smith and a member of the Original Church from the beginning (Ibid.), testified (Record 124) as follows:—

The church at that time and from 1832 had an officer known as a Bishop. His name in 1832 was Edward Partridge. I knew him personally; he lived at Kirtland, Ohio, when I did. From Kirtland, Ohio, he came to Jackson County, Missouri, in the year 1832, probably between '32 and '33.

The duties of the office of Bishop were to hold the treasures of the church and to have the same at his command to dispose of according to the direction of the church in conference. I think he held that position until the time of his death: I do not know when he died.

What caused him to come to Missouri was, he was authorized by the church at Kirtland, Ohio, after collections of money had been made for the purpose of coming here, into Jackson County, Missouri, to purchase land for the church, and especially to purchase a place for the Temple Lot. I call to mind that we enlisted a special number of the church to attend to the purchase of land for the church, and that the other parties interested in relation to money matters in connection with the church fund were Sidney Gilbert, N. K. Whitney, F. G. Williams, John Carl, William Marks, John Carter, Reynolds Cahoon, and Titus Billings.

These parties raised the funds that were lodged with the Bishop for the purpose of purchasing lands in Jackson County, Missouri. I was personally acquainted with these men. They were among the first members of the church. William Marks, at that time, held the office of high priest. I don't know what office the other parties held, but they were the ones

selected to gather the money together for the purpose of lodging it in the hands of Bishop Partridge to purchase this land in Jackson County, Missouri, and the Bishop afterwards did purchase the land.

Again at pages 128, 129:—

I can name some individuals that I know gave Edward Partridge, the Bishop of the church, money before he came to Missouri, to help pay for the purchase of the land for the church. My father gave him some money, N. K. Whitney gave him some—I could not say how much—and Sidney Gilbert. There may have been others that I personally knew at the time that I don't call to mind now.

The general understanding and report to the church of the facts concerning the amount of money that was raised by the committee that was appointed show that there was contributed for the purpose of purchasing the land, quite a sum of money, the exact sum, of course, I can't remember. I know that Edward Partridge came west for the purpose of purchasing land for the church and that the land was purchased. My recollection is that the amount of money that was called for to purchase land for the church was something like three thousand dollars, and my understanding is and was that the amount called for was paid in 1832. I don't know whether any persons except members of the church at Kirtland contributed or not.

William Marks also contributed to the fund for the purchase of the land, and it has always been my understanding that for the amount of money he contributed for the benefit of the church and purchase of land here in Jackson county that he got a deed to the temple in Kirtland. That was placed in his hands to secure him for the money he had placed in the hands of the Bishop to purchase land in this country. Mr. Marks was a member of the church; he would not have been in this land deal if he had not been. He was also an officer in the church.

The title of the temple property in Kirtland was put in the name of William Marks to secure him for a part of the money that was sent out into Missouri for the purpose of purchasing this land for the temple, and the purchase of a printing press for the printing office, and material of that kind for the printing establishment.

At page 134:—

I know of my own knowledge that a man was appointed for the purpose of purchasing the property in controversy. The money was collected and placed or deposited in his hands, and he was sent out into this county to purchase lands, and he did purchase it. Now these are facts that I know as I know anything; but still it is a fact that I did not see the money paid over, nor did I see him when he purchased the land; but it is here and shows for itself that he did purchase it.

It was not a mere rumor that the money was used in purchasing this land. It was a matter of general conversation and knowledge. It was bought with money that was contributed, too, when I was a member of the church.

Emily D. P. Young, who was a daughter of Partridge (Record 208), a wife of Brigham Young (Record 652), and from whom Pool bought, testified (Record 209, 210) thus:—

Neither myself, nor any of my brothers and sisters, nor my mother while she was living ever made any claim to the property. We never did make any claim. As I say, I don't remember; I don't think we ever laid any claim to that property as being ours, for we never felt that way or thought that it could be ours. I never thought that the property was ours or thought that it belonged to us.

I don't remember the party with whom the deal was made saying anything about the kind of property it was. I understood at the time and have always understood, and supposed he understood the character of the property thoroughly—understood perfectly the state of things.

I executed the deed with the understanding that the property was not our individual property, but was property held by my father for the use and benefit of the church; and I executed the deed with the understanding at the time that the party to whom it was being conveyed understood the character and nature of the property that was being conveyed to him.

John Taylor, one of the members of the Original Church (Record 220), testified (Record 221, 222), thus:—

My understanding was that this property was church property. That was my understanding; but as to who entered the land or bought it, I cannot say. Edward Partridge took me to the corner stone, or the stone that marked the Temple, he and Mr. Morley together, and said that was the place where the Temple was to be built. That was the first time I ever saw that piece of ground, it was called the Temple Block, there in Jackson County, Missouri.

According to my understanding the land was purchased with church moneys, because Edward Partridge told me he had contributed his money along with the other members of the church. The understanding was that the members of the church who came there and located were expected, under the rules of the church, to consecrate their property, or a part of it, for church purposes. The purpose for which their contribution of property was accepted from the members was to purchase lands. Edward Partridge showed me the chest the church funds were in; and I saw him take money out of it, and I saw him put money into it.

I know where the property is that is in litigation in this suit. I stood on the ground, and Bishop Partridge showed me where it was, and I quarried rock there on that ground too; that is, the ground that had been dedicated for the Temple, and that stone was there too and marked the place as a landmark, and I understood it from both him and Morley.

Hiram Rathbun, Sr., (Record 261, 262,) said:—

The meetings of the church at that time were held in a log house that they used as a schoolhouse, and the meeting house was located either on the Temple Lot or very near it. I would not say that it was right on the

Temple Lot; but if it was not on it, it was very near by it; and in pleasant weather in the summer time and the fall when they were having two-days' meetings at a time, they had them on the Temple Lot in the woods.

Edward Partridge himself stated publicly the same thing, that it was set apart and dedicated for a temple, for the worship of God. I have heard him state that publicly. These declarations of Partridge were made right there on the ground where the meetings were held. At the meetings would be the times that they would speak specially about it. They seemed to speak of it as being a sacred spot.

John H. Thomas (Record 288) said:—

Yes sir, I know that Jackson County, Missouri, had particular attractions for the Mormon people. They had been taught, and the revelations were recorded in their standard books, that it would be a center place or gathering point for all the Latter Day Saints. We believe it will be a center place for the church; that is what our books teach. We believe it will eventually be; and all Latter Day Saints have always held to that belief, and hold it so yet. Wherever they are anywhere in the world they believe that yet. They believe that the Lord is preparing to gather his people together in the latter days, before the coming of Christ; that is the faith of all the members of the church that I have ever met with yet.

W. W. Blair, who has been active in the faith since 1857 (Record 139), said (Record 169, 170) this:—

Yes sir, I claim as an officer and member of the Church of Jesus Christ of Latter Day Saints that the temple property here in Independence should inure to the church proper; and I believe and make that claim because I believe in the principles of the gospel I have enumerated and what follows. We understand that the Original Church in its inception indorsed all that led up to these principles, or all that these principles led up to, and which in their development were afterwards taught to the church, and they were the natural outgrowth of the original, fundamental principles. That is a matter of history from 1830 up to 1844.

Wilford Woodruff, the successor of Brigham Young, and head of the Utah Church (Record 323), practically admits the trust (Ibid 326) by saying:—

At that time the Temple Block was supposed to be and was claimed by the church as church property, but how or in what way, I don't know. I don't know whether there has ever been a time from that day to this that the church has not claimed the Temple Property as church property.

Of course the church has looked upon that Temple Block as a place to build a temple upon, according to a certain revelation given at an early date in the church, and that is about all I can claim about it, or can answer to the question. That revelation is recorded in the Book of Doctrine and Covenants in the 1835 edition.

Jos. C. Kingsbury, a witness for defendants, who was with the

church in 1832 (Record 365), on cross-examination and without objection said (Ibid. 366) this:—

I know this, that Bishop Whitney said to me that he had sent money out there to buy land for the church, told me that after I went with the church. After I had joined it, I went with him and lived with him a while, and that is what he told me about it. He sent it up to buy land, sent it to Bishop Partridge.

Joseph B. Noble who joined the church in 1832 and testified for defendants (Record 396) said (Ibid. 397, 398) this:—

Edward Partridge was the first Bishop of the church I know of. Yes, sir, there was some money raised for the purpose of buying land in Missouri, at the time I was in Kirtland, Ohio, and it was sent to Bishop Partridge in Missouri.

William Marks was a prominent man in the church at that time, and a moneyed man at that time too. N. K. Whitney and Edward Partridge were both bishops in 1833, at the time they were raising money to buy land in Missouri; might have been a little before or a little after 1833.

There was some money raised for that purpose and sent to Missouri, and I learned afterwards that land was bought, and the land was set apart and dedicated for the Temple.

I heard about that, and that it had been dedicated to the church. I heard it preached from the pulpit, but how deep, and how far, and to what extent, I do not know now.

John H. Taylor, who was another witness for the defendants, said (Record 481) this:—

It was called the Temple Lot because it was understood that the Mormons claimed the ground and expected to return here and build a magnificent temple on the ground, and that that place would be the place of ascension on the last day.

Besides this, old settlers not of the Mormon faith, declare in the strongest terms, that the purpose for which the lots were held was a matter of the greatest public notoriety. (Ev. Wm. M. Clay, Record 205; Isaac N. Rodgers, 173; Robert Weston, 203; Wm. R. Wilson, 478-480; Thomas Maxwell, 452-454;) William McCoy, a banker, who has lived at Independence fifty years (Ibid. 505), said:—

I am acquainted with the property in controversy in this case known as the Temple Lot or Property. I know where it is located. I have been acquainted with it ever since my residence here and have known it all the time I have resided here. People generally called that property in speaking of it, the Temple Property. It was known by the name of the Temple Ground or Temple Property, or the Temple Lot or the Old Temple Lot; for it was variously called by these varying names by different people at different times, but it has always been distinguished as the Temple Property in some way or other, at least ever since I have been here; and that is fifty

years and over. Fifty years ago it was known as the Temple Lot or Temple Property.

Isaac N. Rodgers, another banker who has lived at Independence since 1848 (Record 173), said:—

I know the property here in Independence, Missouri, that is in litigation in this case. It is what is known as the Temple Lot. I know that property. I think I have known that piece of ground since 1853 or 1854. I have known it since about that time as the Temple Lot. People generally called the lot in speaking of it, the Temple Lot. That is the name the people generally and usually bestowed on that lot in speaking of it since the time I first knew it in 1853. That is what I have always heard it called,—the Temple Lot.

Robert Weston, who has lived in Jackson County sixty years (Record 204), said:—

Yes, sir, I have known the Temple Lot very well since 1833 or along about that time, perhaps it was a little before or a little after that time that I first knew, but at any rate it was about that time and I have known it very well ever since that time.

The people generally in speaking of that property called it the Temple Property. I never heard it spoken of in any other way than the Temple Lot. That is what it is always called by everybody that I knew anything about. The people always called it the Temple Lot, that is what they said about it.

William R. Wilson, defendant's witness, who has lived in Jackson County since 1839, said (Record 478, 479):—

I said I had been here in this county ever since I was two or three years old; moved from Clay County over on this side of the river when I was three years old. I am fifty-six years old now; have been in this county fifty-three years; that would bring me here in 1839. I remember hearing something said here about that time about the Mormons and their having been driven away from here; I certainly did; there was considerable talk here about that occurrence. I heard about the Temple Property at that time; knew where it was located at that time; have known where it was located ever since I was big enough to know anything.

It has always been called the Temple Lot ever since I have been here. If anybody had come to me during any of the time that I have lived here and asked me to point out the Temple Lot I could have done it. I should have gone out here by the Mormon church and pointed out that lot across the street that is inclosed.

I know the church or building I think that you mean, but I do not know who it belongs to; it is there in the lot that we call the Temple Lot. If anybody, any stranger or other person had come to me and wanted to see the Temple Lot or sacred spot that was designated for the Temple, I would have shown them that piece of ground that is inclosed down there, and has that little church building on it. I have showed it to people a great

many times. I have shown that lot to great many people as the Temple Lot, and told them that it was the Temple Lot. I do not know that I could point out the boundaries, except it was known as the Temple Property.

Everybody knew it by that name, and pointed it out as the Temple Property; but at the same time, while I knew it was the Temple Property I do not know that I could have gone to work and pointed out its exact boundaries. I know though that it has been known as the Temple Lot, ever since I have been here. That piece of ground that has the little church building on it, has always been called the Temple Lot ever since I have been big enough to know anything; I remember that right well. . . . Yes, sir, I would have been able to designate that particular spot of ground as the Temple Lot at the time, before there were any streets laid out or opened up through there.

Yes, sir, I could have gone on that ground without any trouble, but I could not have given any boundary to it. There were no streets laid off there when I first knew it, nothing but the road; we called them roads then.

I do not know just exactly how far this ground that is fenced now extended west, or how far it came east; but I remember, I know right well, that on that point of land there along the Westport road, and right across the street from where the Mormon stone church is now, and that point of land there was always known and called the Temple Lot. I know that right well, for that was always designated as the Temple Lot.

I do not know how far it extended south; there was nothing marking the boundaries. The Westport road would mark the boundary on the north. I do not know anything about how many acres there was, or anything of the kind. I just know what has always been called the Temple Lot since I have been here. Everbody knew that it was the sacred spot that was to be the place for the Temple. . . . Yes, sir, it is true that that particular spot of ground called the Temple Property slopes in every direction of the compass, and the highest point on the lot is designated on the map, and I could tell when I was on the highest point.

Richard Hill, Bishop of the defendant church (Record 460), and the person who as trustee, claims to hold the title for the church by virtue of a proceeding in the State court to substitute him as successor to Granville Hedrick (Ibid. 578), testified (Ibid. 468) thus:—

I am the trustee of this property in controversy; I hold it as trustee for the Church of Christ,—the Church of Christ organized the 6th day of April, 1830, of which Joseph Smith, Junior, the Seer, was the President. Yes, sir, he is the one who organized the church on the 6th day of April, 1830, as I understand it. We hold the property in trust for the church; we claim to be a part and parcel of that church, and hold this property in trust for that church, for the church that is in succession.

Of course I claim that we claim to be the original church, and we hold it for the church.

Q.—Is it not true that you claim, and hold, and have always so claimed

and held since you have been the trustee, to hold the property in trust for the legal succession of the church that was organized in 1830?

A.—In no other way have we held it than for the church, and we claim to be the church in legal succession from 1830 down to the present. We are holding it in trust for the church which is represented by us, and which we claim is the church that was organized by Joseph Smith, on the 6th day of April, 1830, as history records it. We claim to hold this property in that way, as being part and parcel of the church organized at that time.

And again at page 476:—

I came here on account of a particular place spoken of in the Book of Doctrine and Covenants, that is what brought me here: and it was with reference to that particular spot of ground that was claimed by the original church. I did not come here because of any special temporal benefit I expected to receive, but on account of the teaching I had been taught to gather here in this country. We called it "Gathering to Zion." I got that information partly from the Book of Doctrine and Covenants, and partly from having it preached to me, and other information that was taught and preached to me by members of the original church. The Saints were to gather here in Independence, or Zion, as it is called. I had read the revelation in the Book of Doctrine and Covenants with reference to the Temple Property here in Independence, given in July, 1831, with reference to certain Temple Property here in Jackson County, Independence.

When I came here I went and tried to find that particular property, and it was here plain enough to be seen. I did not have to try and find it, for it was here plain enough to be seen, and it was no particular trouble to find it. I found the Temple Property myself; came right by it when I came up from the depot. I knew it in various ways; I knew it by seeing it and examining it for myself, and other ways.

Again at pages 477, 478:—

All these revelations with reference to Zion I believe in them and accept them as correct, but I give them a qualified approval by way of accepting them. I believe them like this, as far as I understand them. I did not claim to have a correct understanding of all then, and I do not claim to have a correct understanding now.

Yes, sir, there is one thing that I did understand, and that is that this place here was appointed as a gathering place for the Saints. We believe that revelation, and we understood that revelation and believed it. That revelation speaks of a gathering place for the Saints, and a place for the erection of the Temple, and we believe that, of course; believed that it came as a divine revelation from God.

Certainly we do, and through Joseph Smith the prophet and seer; and when that revelation says that the place for the Temple is westward from the courthouse, I understand by it just what it says,—that that was the place selected by God and designated by him through the revelation given through Joseph Smith as the place for the Temple.

When I came here I do not know that I was terribly anxious to see the

place that was supposed to be the Temple Lot. I probably had some curiosity to see it. I had some curiosity to see it. I had curiosity enough to find out and look up the particular spot of ground which had been designated by God Almighty as the place for the erection of the Temple.

If, therefore, there is one thing plain in this case, it is that upon these facts, and without more, this property was actually acquired and held by Partridge for the church. And it is not strange that the title was taken to the Bishop, because at the time the State Constitution provided "that no religious corporation can ever be established in this State" (Const. Mo., 1820; Art. 13, Sec. 6), and, hence the only way a title could have been then acquired was by some individual taking it in trust.

We have been thus particular to deal with this branch of the case so that the court might see that independently of the solemn written declaration of trust which we are about to consider, the facts are sufficiently established to declare a trust independently thereof.

3. THE TRUST IS EVIDENCED BY A WRITTEN DECLARATION FROM PARTRIDGE.

February 7, 1870, there was filed for record a written conveyance or declaration of trust from Partridge to the infant children of Oliver Cowdery in the following words:—

Know all men, that whereas there was money put in my hands, to wit, —in the hands of Edward Partridge, by Oliver Cowdery, an elder in the Church of Latter Day Saints, formerly of Kirtland, State of Ohio, for the purpose of entering lands in the State of Missouri, in the name of, and for the benefit of said church; and, Whereas, I, Edward Partridge was Bishop of, and in said church he took said money and funds thus put in his hands and entered the land in his own name, in the county of Jackson, State of Missouri, in the name of Edward Partridge, the signer of this deed.

Now know ye that for the furthering the ends of justice, and as I have to leave the State of Missouri, by order of Governor Boggs, and with me also our church, I do for the sum of one thousand dollars to me in hand paid by said Oliver Cowdery, do give, grant, bargain, and sell to John Cowdery, son of Oliver Cowdery, now seven years old; and Jane Cowdery three years, and Joseph Smith Cowdery one year old, all the lands entered in my name in the county of Jackson, in the district of Lexington, in the State of Missouri. Said Edward Partridge the first party and signer of this deed does also sell, alien, and confirm to the aforesaid John Cowdery all real estate and lands he has both entered as aforesaid, and all he owns in his own name by private purchase and holds by deed of gift, being intended for the use of the Church of Latter Day Saints or otherwise. This sale is to embrace all lots of all sizes, situated in Independence, and to embrace the

lot known as the Temple Lot, and all other lands of whatever description said Partridge the first party is entitled to in said Jackson county, in the State of Missouri. Said Partridge also agrees to amend this deed to said Oliver Cowdery at any time for the purposes aforesaid.

Given under my hand and seal on the date above written.

E. G. GATES, Witness. EDWARD PARTRIDGE, [SEAL.]

STATE OF MISSOURI, } ss.
Caldwell County. }

Be it remembered, that on the 25th day of March, 1839, before me, the undersigned, one of the Justices of the County court in and for said County, came Edward Partridge, who is personally known to me to be the same person whose name is subscribed to the foregoing instrument of writing as party thereto, and did acknowledge the same to be his act and deed for the purposes therein mentioned.

In testimony whereof I have hereunto set my hand and affixed my private seal on the day and year above written.

ELIAS HIGBEE, J. C. C. C.

The foregoing deed with the acknowledgment thereon from Edward Partridge to Jane Cowdery, *et al.*, was filed and duly recorded in my office on the 7th day of February, A. D. 1870.

A. CUMINGO, Recorder.
By H. G. GOODMAM, Deputy.

To show the persuasive nature of the instrument and that the facts attending the transaction proved the actual execution of the instrument, if such proof be necessary, a certified copy of the deed only being offered in evidence, it becomes necessary to go somewhat into detail.

After the members of the church had been in Jackson County about two years, and after the acquisition of the property, they were driven by mob violence into Clay County, Missouri, from whence they moved into Caldwell County and located at or near Far West. While a review of the outrages perpetrated upon these people might be of interest, it is probably sufficient to here say that the facts stated are without dispute. (Ev. Brackenbury, Rec. 263, 264; Robt. Weston, 281, 283; H. Rathbun, Sr., 248–251, 260, 261; Martha A. Hall, 310; Jacob Gregg, 319–321; Wilford Woodruff, 325, 326; W. L. Wilson, 478, 479.)

In the latter part of 1838 Governor Boggs issued an order expelling these people from the state, sending the state militia under Generals Clark and Doniphan. For some unaccountable reason the record discloses that this order has mysteriously disappeared and is no longer among the papers of the state. (Rec. 314.) Boggs probably in sober thought became ashamed of the record it made. Suffice it to say that early in the spring of 1839 all the members of the church were forcibly driven from the state and located at

Nauvoo, Hancock County, Illinois. The grossest outrages were perpetrated, the lives of all of the faith endangered, their leaders imprisoned, and their property, without any law therefor, absolutely confiscated under the pretense of paying the expenses of the state in what has since been known as the Mormon war. (Ev. Robt. Weston, Rec. 284; H. Rathbun, Sr., 251–253, 259, 260; Mary Eaton, 300, 302; Wilford Woodruff, 326; Mercy R. Thompson, 375; Jos. B. Noble, 398; Speech of Gen. Clark, 316; See also Times and Seasons, Original exhibits K and L for a history of the occurrences.)

Governor Boggs, while a private citizen, had led the mob which in 1833 expelled these people from Jackson County. After he became governor he issued an order that they should be exterminated. The military leader refused to literally carry out the order of the governor, and in a treaty with the Mormon leaders placed the conditions of their leaving in the following writing:—

Gentlemen:—You whose names are not attached to this list of names, will now have the privilege of going to your fields to obtain corn for your families, wood, etc. Those that are now taken will go from thence to prison, be tried, and receive the due demerit of their crimes; but you are now at liberty, all but such charges as may be hereafter preferred against you. It now devolves upon you to fulfill the treaty that you have entered into, the leading items of which I now lay before you.

The first of these you have already complied with, which is, that you deliver up your leading men to be tried according to the law.

Second, that you deliver up your arms; this has been attended to.

The third, is that you sign over your properties to defray the expenses of the war; this you have also done.

Another thing yet remains for you to comply with, that is, that you leave the State forthwith; and whatever your feelings concerning this affair, whatever your innocence, it is nothing to me.

General Lucas, who is equal in authority with me, has made this treaty with you. I am determined to see it executed.

The orders of the Governor to me were, that you should be exterminated, and not allowed to continue in the State; and had your leaders not been given up and the treaty complied with before this, you and your families would have been destroyed, and your houses in ashes.

There is a discretionary power vested in my hands, which I shall try to exercise for a season. I do not say that you shall go now, but you must not think of staying here another season, or of putting in crops; for the moment you do, the citizens will be upon you. I am determined to see the Governor's message fulfilled, but shall not come upon you immediately.

Do not think that I shall act as I have done any more; but if I have to come again because the treaty which you have made here shall be broken, you need not expect any mercy, but extermination, for I am determined that the Governor's order shall be executed.

As for your leaders, do not once think, do not imagine for a moment, do not let it enter your minds, that they will be delivered, or that you will see their faces again; for their fate is fixed, their die is cast, their doom is sealed.

I am sorry, gentlemen, to see so great a number apparently intelligent men found in the situation that you are; and oh, that I could invoke the Spirit of the unknown God to rest upon you, and deliver you from that awful chain of superstition, and liberate you from those fetters of fanaticism with which you are bound.

I would advise you to scatter abroad, and never again organize with bishops, presidents, etc., lest you excite the jealousies of the people, and subject yourselves to the same calamities that have now come down upon you. You have always been the aggressors; you have brought upon yourselves these difficulties by being disaffected, and not being subject to rule, and my advice is, that you become as other citizens, lest by a recurrence of these events, you bring upon yourselves irretrievable ruin. (Record 316.)

The real reason for these people being expelled from the State was their antislavery views. In one of the exhibits, a church paper published at the time (See Messenger and Advocate, 354) it appears that when the Mormons were, by mob violence, forcibly expelled from Jackson County they passed into the adjoining County of Clay, and there said to some of the leading citizens that if permitted to abide there temporarily they would leave whenever the people called upon them so to do. After they had been there about six months there was a public meeting of the citizens of Clay County, at which a committee was appointed, headed by David Atchison, whom this court will recognize as the greatest slavery advocate that the West ever had, and a memorial was prepared to read to the Mormon leaders, calling upon them to adhere to their promise and leave the county and giving as a reason therefor that the Mormons did not believe in slavery. We quote from that memorial:—

These are some of the reasons why these people have become objects of the deepest hatred and detestation to many of our citizens. They are Eastern men, whose manners, habits, customs and even dialect, are essentially different from our own; they are non-slaveholders, and opposed to slavery; which, in this peculiar period, when abolition has reared its deformed and haggard visage in our land, is well calculated to excite deep and abiding prejudices in any community where slavery is tolerated and practiced.

A petition was circulated in Jackson County in 1833, calling upon the people to assist in expelling the Mormons from the county. The paper thus circulated and signed gave as the reason for the expulsion of these people that the Mormon Church thought the freed negro and mulatto could be saved and that such a doctrine would corrupt the slaves and injure the slave system. In that paper as

published in the church record at that time (The *Evening Star*, p. 227) these reasons are thus assigned:—

More than a year since, it was ascertained that they had been tamper ing with our slaves, and endeavoring to sow dissensions and raise seditions amongst them. Of this their Mormon leaders were informed, and they said they would deal with any of their members who should again, in like case offend, but how specious are appearances, in a late number of the *Star*, published in Independence by the leaders of the sect, there is an article inviting free negroes and mulattoes from other States to become Mormons and remove and settle among us; this exhibits them in still more odious colors. It manifests a desire on the part of their society, to inflict on our society an injury that they know would be to us entirely insupportable, and one of the surest means of driving us from the county; for it would require none of the supernatural gifts that they pretend to, to see that the introduction of such a cast amongst us, would corrupt our blacks and instigate them to bloodshed.

Oliver Cowdery, father of the infants named in the Partridge deed, was one of the superintendents of the church in Missouri, had contributed largely to the purchase of the church lands, and his family was in Caldwell County at the time. (Ev. Rathbun, Rec. 259.) History records that he was one of the witnesses to the plates written in hieroglyphics from which was transcribed the Book of Mormon. (See also church record, *Times and Seasons*, p. 354.)

Now with the governor's order for extermination and the belief in the sacred nature of the property, what is more natural than that Partridge should desire to impress the trust where it would be safe, and how likely it was, in times of trouble at least, that innocent children would be spared? Hence the conception of there fixing the title. And as if then realizing that there might be informalities in the writing, the deed recites that it shall be amended at any time on demand. It was acknowledged before Elias Higbee as County Judge (Rec. 274) who in fact held that office (Rec. 225, 315) and was in Caldwell County and a member of the church (Ev. Woodruff, Rec. 335; John Taylor, 225). In the church record, (*Times and Seasons*, 287,) it appears that after the Mormons reached Illinois he was a candidate for alderman on the Mormon ticket. And in the *Times and Seasons*, at page 387, it is recited that he was high in office at the general church conference in 1840. The deed was witnessed by E. G. Gates, also a member of the church, who, with Partridge, was in Caldwell County at the time. (Ev. Taylor, Rec. 225; W. Woodruff, 335.) It is natural to suppose that the deed was thereafter kept with the records of the church. All these records were carried off by Brigham Young of the Utah Church (Ev. Whitehead, Rec. 62,

63; Blair, 165. Woodruff, 323) which believes in the sacredness of the property (Ev. Woodruff, Rec. 326) and is in reality defending this case in the name of the defendants. (Ev. Littlefield, Rec. 364, 365; Priscilla Staines, 416; Hall's letters, 513-515; Conduct J. F. Smith, 375, 376, 378.) Besides this the document evidently got in with the records of the church at Nauvoo, for in the church record (*Times and Seasons* June, 1841, at pages 127, 128) there is an obituary notice of the death of Partridge containing, among other things, the following:—

> Died—In this place on the 27th day of May, Bishop Edward Partridge, aged 46 years. In recording the death of this our brother, we record the death of one of our earliest, most faithful, and confidential members. . . . No man had the confidence of the church more than he. His station was highly responsible; *large quantities of property ever entrusted to his care. Deeds and conveyances of lands to a large amount, were put into his hands, for the benefit of the poor, and for church purposes; for all of which, the directest account was rendered, to the fullest satisfaction of all concerned.*

If Partridge had not at that time accounted for this temple property such a notice would never have been published in the church records. The deed has never been in the possession of complainant nor its church. (Ev. Kelley, Rec. 277.) It was not recorded until February 7, 1870. (Rec. 274.) About the same time, November 12, 1869, Granville Hedrick as trustee acquired three of the lots for the Original Church (Rec. 575) and about the same period William Eaton, a member of the Original Church and afterwards a member of the Hedrickite Church (Ev. Mary Eaton, Rec. 303; Alma Owens, 458, 460; Richard Hill, 472) was busily engaged in buying outstanding titles to the other lots (Rec. 571, 572) which in 1877 he conveyed to Hedrick as a church trustee. (Rec. 576, 577.)

Now the Utah Church on account of its departure in faith could not claim the property, but if backing and acting in concert with the Hedrickites, is it not a natural inference that, in attempting to clear up the title in trust for the Original Church of which the Hedrickites were claiming to be the successors, this deed of 1839 should be placed of record to fortify and strengthen that title?

More than this, a county judge took his acknowledgment, an attesting witness subscribed his name, and the recorder of Jackson County filed the instrument. The presumption is that these men performed their duties and acted properly. (Addis *v.* Graham 88 Mo. 197; Lenox *v.* Harrison 88 Mo. 491.)

We therefore submit that no mind can study this record and not be convinced that this instrument was executed and stands as a solemn declaration of trust, and that no member of the Mormon

church, regardless of the faction to which he belonged could have become an innocent purchaser for value.

4. THE CERTIFIED COPY OF THE COWDERY DEED WAS ADMISSIBLE IN EVIDENCE.

Complainant, not being able to produce the original Cowdery deed, offered in evidence a certified copy of the original as recorded. If this was *prima facie* evidence, then the deed is proven, because no rebutting proof was offered. In passing it may be remarked that there is no requirement in the Missouri law as to time after execution within which a deed must be recorded. So that so far as the immediate question is concerned, it is immaterial that the instrument, although executed in 1839, was not recorded until 1870. Chapter 62 (Rev. Stat. Mo. 1889), under the head of evidence, contains sections 4859, 4860, and 4863, reading as follows:—

Sec. 4859.—Any deed of conveyance, duly acknowledged or proved and recorded, according to any law in force at the time of taking such acknowledgment or proof, although not declared by such law to be evidence, shall be received in evidence, if it appear to have been duly recorded in the proper office, within one year from its date, and more than twenty years from the time it is offered in evidence.

Sec. 4860.—Such deed or conveyance, acknowledged or proved and recorded, according to law, though not recorded within one year from the date thereof, or twenty years before it is offered, may be read in evidence, upon proof of such facts and circumstances as, together with the certificate of acknowledgement or proof, shall satisfy the court that the person who executed the instrument is the person therein named as grantor.

Sec. 4863.—Whenever any deed, conveyance or other evidence of title, or a copy thereof, shall be offered in evidence, under the provisions of any of the preceding sections, and objected to, the party objecting may introduce evidence to show that the original is not what it purports to be, or that it was not executed by those in whose name it purports to have been executed, or that the copy offered is not a true copy of the original; and the court shall determine thereon, and admit or reject the instrument, according to the evidence.

It will be observed that section 4859 refers to cases of deeds recorded at a time when the law did not declare the instrument as thus recorded to be evidence. It was a curative or legalizing act to meet the case of Strother *v.* Christy 2 Mo. 148 and was adopted originally in 1839 (Laws Mo. 1838-9 p. 42, Sec. 9, 10). As the Pool deed was recorded in 1870, the laws then in force were the Revised Statutes of 1865, and they provided in express terms for copies of recorded deeds to be put in evidence, the language being the same as in the present revision. (Gen. Statutes 1865, chap.

109, Secs. 29, 30, 31.) And as we hereinafter quote sections, 2427, 2428, 2429 of the revision of 1889, it is unnecessary to here set them out.

But if we should concede that sections 4859, 4860, and 4863 applied then, as Judge Philips properly said, the copy was admissible under section 4860, because "the facts and circumstances" already recited "together with the certificate of acknowledgment" were and are sufficient to "satisfy the court that the person who executed the instrument is the person therein named as grantor." In such circumstances the copy was admissible and the burden was, by section 4863, placed on defendants to prove that the instrument was not executed. However, there are other provisions of the State statute governing this case, and making the certified copy admissible without regard to the foregoing sections. They are found in chapter 40, under the heading of "Conveyances of Real Estate," and in sections 2395, 2401, 2403, 2418, 2428, 2429. These sections are found in all the former revisions in substantially the same form. Sections 2427, 2428, and 2429, read as follows:—

Sec. 2427.—Every instrument in writing, conveying or affecting real estate, which shall be acknowledged or proved, and certified as hereinbefore prescribed, may, together with the certificate of acknowledgment or proof, and relinquishment, be read in evidence, without further proof.

Sec. 2428.—Where any such instrument is acknowledged or proved, certified and recorded, in the manner herein prescribed, and it shall be shown to the court by the oath or affidavit of the party wishing to use the same, or of anyone knowing the facts, that such instrument is lost, or not within the power of the party wishing to use the same, the record thereof, or the transcript of such record, certified by the recorder under the seal of his office, may be read in evidence, without further proof.

Sec. 2429.—Neither the certificate of the acknowledgment nor the proof of any such instrument, nor the record nor the transcript of the record of such instrument, shall be conclusive, but the same may be rebutted.

Now, section 2427, in plain and explicit terms, provides that the original instrument, when thus acknowledged and recorded, can be read in evidence without more, *i. e.*, without proof of execution or delivery. Section 2428 explicitly provides that when the proof shows (as in this case, Ev. E. L. Kelley, Record 277) that the original is not within the power of the party wishing to use the same, the copy shall be read in evidence "without further proof," *i. e.*, without proof of execution or delivery, and section 2429 gives the right to introduce proof in rebuttal showing nondelivery or nonexecution. As the Cowdery deed was acknowledged and recorded in accordance with the laws in force at the time of recording, as well

as with the provisions of the Revised Statutes of 1889, there is no reason for saying that section 2428 does not meet the objection.

5. IT WAS NOT NECESSARY TO PROVE AN ACTUAL DELIVERY OF THE COWDERY DEED.

As already seen, section 2428 Revised Statutes, 1889, made a *prima facia* case of execution and delivery. More than this, it has been held, as Judge Philips decided, that there is a presumption of delivery at the date of acknowledgment. (Fontaine *v.* Boatsman's Savings Institution, 57 Mo., 552.) And that the recording of acknowledged deed creates the presumption of delivery. (Kane *v.* McCoun, 55 Mo., 198; Caldwell *v.* Gaines, 31 Mo., 134; Henry County *v.* Bradshaw, 20 Iowa, 255; Loomis *v.* Pengree, 43 Mo., 299.)

The facts already recited show that Partridge accounted to the church for his trust; that the papers and records of the Original Church were appropriated by the Utah Church, which is the real defendant in this case, and afterwards, while outstanding titles were being acquired by Hedrick, the Cowdery deed mysteriously appeared for record and then as mysteriously disappeared. It has never been in the possession of complainant's church. There is therefore the strongest presumption of actual delivery to the Original Church, the real beneficiary.

But, independently of all this, the question in this case being whether the property was in fact trust property, the deed may be treated as a written declaration of trust. In such case delivery is not essential. (Carson *v.* Phelps, 40 Md., 73; Perry on Trusts, 3d Ed., Secs. 198, 101, 103.) On the other hand, any paper or writing, even of the most informal nature and even between third persons, may be treated as a declaration of trust and enforced accordingly. This doctrine is clearly stated in Tiedeman on Real Property, Section 507 where the cases are cited.

The infant Cowdery children named in the Cowdery deed died intestate prior to their majority, and Oliver Cowdery also died intestate. His widow, and their mother, Elizabeth Ann Cowdery, and her daughter, Marie Louise Johnson, nee Cowdery, were left as their sole heirs at law. (Ev. Dr. Chas. Johnson, Record 226-229.) The widow, on May 29, 1886, conveyed to the daughter (Record 278, 279) and she, with her husband, on June 9, 1887, conveyed to Geo. A. Blakeslee as trustee for complainant's church and his successors in office (Ibid. 275). Blakeslee was the Bishop of that church up to the date of his death, September 20, 1890, when E. L. Kelley was selected as his successor as Bishop. (Ev. Kelley, 277.) Blakeslee died without making any conveyance. In the absence of a cor-

porate body Bishop Kelley ought to be designated to take the title as trustee for the church, for such would be among the duties of the Bishop. (Ev. Kelley, Record 264-266, 267, 268; Stebbins, 199.)

It may well be said that in Missouri the title to trust property does not pass to the heirs of the trustee, for the State statute explicitly provides that in case of death there shall be the appointment of a new trustee. Sections 8683, 8684 of the Revised Statutes of Missouri, 1889, provide:—

Sec. 8683.—If any trustee in any deed of trust, to secure the payment of a debt or other liability, or to whom any property is or has been conveyed for the benefit or use of any person, shall die, or has died, shall become or has become insane, shall remove or has removed out of this state, shall neglect or refuse, or has neglected or refused to act as such trustee, or shall or has become unable, by sickness or other disability, to perform or execute his trust, any person interested in the debt or other liability, secured by such deed of trust, if it be a deed of trust, to secure payment of a debt or liability or the cestui que trust or beneficiary, his or her heirs, legal representatives or assigns of a deed of trust for the benefit or use of any person, may present his or their affidavit stating the facts of the case specifically to the Circuit Court of the county in which the property or estate conveyed by such deed of trust or any part thereof is situated.

Sec. 8684.—If such court shall be satisfied that the facts stated in such affidavit are true, it shall, in the case of a deed of trust given to secure the payment of a debt or other liability, make an order appointing the sheriff or some other suitable person of the county trustee to execute such deed of trust in the place of the original trustees, and thereupon such sheriff or other suitable person appointed by said court shall be possessed of all the rights, powers and authority possessed by the original trustee under the deed of trust, and such sheriff or person shall proceed to sell and convey the property and to pay off the debts and liabilities according to the directions of the deed of trust, and shall do all other acts the original trustee had power to do and with the same force and effect; and in case of a deed of trust given for the benefit and use of any person other than the payment of a debt or other liability, such court shall make an order appointing a suitable person as trustee in such deed of trust in the place of the original trustee, to hold the property or estate conveyed by such deed to the same uses and trusts under and subject to the same powers and conditions as the same was held by the original trustee, and who shall do and perform all the acts and things that the original trustee had power to do and perform, with the same force and effect, and shall thereby be substituted to and vested with the same title and interest in the property conveyed in such deed as was vested in and possessed by the original trustee and shall have the same power and right to convey and dispose of such title as the original trustee had.

And upon the facts of this case the law of Missouri is that a new trustee shall be appointed. (Draper v. Minor, 36 Mo., 290.) Such seems to be the general rule in courts of equity.

Suffice it to say that if the heirs of the Cowdery infant children ever obtained a legal title, on the death of Blakeslee the church became entitled to a new trustee.

6. BUT SINCE COMPLAINANT'S CHURCH HAS BECOME A BODY CORPORATE IT MAY BE PERMITTED TO TAKE THE TITLE DIRECTLY.

Having traced the property as a trust into the hands of either the infant Cowdery children, or at least to the Bishop of the church who is now dead, it is to be remembered that complainant, at the time of filing the bill, was a body corporate.

In 1820 the Constitution of Missouri (Art. XIII. Sec. 6) provided that "no religious corporation can ever be established in this State." The constitution of 1865 (Art. I., Secs. 9–13) changed this policy by providing:—

IX. That all men have a natural and indefeasible right to worship Almighty God according to the dictates of their own consciences; that no person can, on account of his religious opinions, be rendered ineligible to any office of trust or profit under this state, nor be disqualified from testifying, or from serving as a juror; that no human authority can control or interfere with the rights of conscience; and that no person ought, by any law, to be molested in his person or estate on account of his religious persuasion or profession; but the liberty of conscience hereby secured shall not be so construed as to excuse acts of licentiousness, nor to justify practices inconsistent with the good order, peace or safety of the state, or with the rights of others.

X. That no person can be compelled to erect, support or attend any place of worship, or to maintain any minister of the gospel, or teacher of religion; but whatever contracts any person may enter into for any such object ought, in law, to be binding and capable of enforcement as other contracts.

XI. That no preference can ever be given by law to any church, sect or mode of worship.

XII. That no religious corporation can be established in this state; except that by a general law, uniform throughout the state, any church or religious society or congregation may become a body corporate for the sole purpose of acquiring, holding, using and disposing of so much land as may be required for a house of public worship, a chapel, a parsonage and a burial ground, and managing the same and contracting in relation to such land and the buildings thereon through a board of trustees selected by themselves; but the quantity of land to be held by any such body corporate, in connection with a house of worship, or a

parsonage, shall not exceed five acres in the country, or one acre in a town or city.

XIII. That every gift, sale or devise of land to any minister, public teacher or preacher of the gospel, as such, or to any religious sect, order or denomination, or to or for the support, use or benefit of or in trust for any minister, public teacher or preacher of the gospel as such, or any religious sect, order or denomination; and every gift or sale of goods or chattels to go in succession, or to take place after the death of the seller or donor, to or for such support, use or benefit; and also every devise of goods or chattels to or for the support, use or benefit of any minister, public teacher or preacher of the gospel as such, or any religious sect, order or denomination, shall be void; except always any gift, sale or devise of land to a church, religious society or congregation, or to any person or persons in trust for the use of a church, religious society or congregation, whether incorporated or not, for the uses and purposes and within the limitations of the next preceding clause of this article.

The Constitution of 1875 (Art. II., Secs 5–8) provided:—

Sec 5. That all men have a natural and indefeasible right to worship almighty God according to the dictates of their own consciences; that no person can, on account of his religious opinions be rendered ineligible to any office of trust or profit under this state, nor be disqualified from testifying, or from serving as a juror; that no human authority can control or interfere with the rights of conscience; and that no person ought, by any law, to be molested in his person or estate on account of his religious persuasion or profession; but the liberty of conscience hereby secured shall not be so construed as to excuse acts of licentiousness, nor to justify practices inconsistent with the good order, peace or safety of this state, or with the rights of others.

Sec. 6. That no person can be compelled to erect, support or attend any place or system of worship, or to maintain or support any priest, minister, preacher or teacher of any sect, church, creed or denomination of religion; but if any person shall voluntarily make a contract for any such object, he shall be held to the performance of the same.

Sec. 7. That no money shall ever be taken from the public treasury, directly or indirectly, in aid of any church, sect or denomination of religion, or in aid of any priest, preacher, minister or teacher thereof, as such; and that no preference shall be given to, nor any discrimination made against any church, sect or creed of religion, or any form of religious faith or worship.

Sec. 8. That no religious corporation can be established in this state, except such as may be created under a general law for the purpose only of holding the title to such real estate as may be prescribed by law for church edifices, parsonages and cemeteries.

In 1872 (Rec. 317, 318) complainant's church was incorporated under the laws of Illinois, as a religious association, the articles providing that they were subject to change, revision, or

amendment by a two thirds vote of the members present and voting at any regular conference, and *until otherwise provided* the church at Plano, Illinois, should be the principal or central church, and all others branches. At a subsequent General Conference, and by a proper vote, it was decided to change the central or principal church from Plano, Illinois, to Lamoni, Iowa, and to do so it became necessary to incorporate under the laws of Iowa. (Ev. Kelley 54; Smith 81, 82; Blair 195-197; Stebbins, 197.) Accordingly articles were adopted (Rec. 58), and by section 6 the corporation was entitled to hold property, and all trustees were directed to convey to it.

It was, in the Court of Appeals claimed by counsel, that the decree vesting the title in the corporation was wrong for two reasons: (*a*) Because complainant is a foreign corporation, and (*b*) Because no deed was made by the holder of the legal title.

Judge Philips so ably disposes of these objections (Opinion, Par. 1, 2, pp. 658-662) that we hesitate to say anything on the subject. However, simply to have this argument in a connected and completed form, we submit this:—

(*a*) *A foreign corporation can hold the property.*

It is to be remembered that in 1832, when the trust was created, the church was an unincorporated body and had to hold the property by some individual taking it in trust. The Constitution of 1820 (Art. 15, Sec. 6,) forbade an incorporation for church purposes. But vast quantities of church property were acquired by unincorporated bodies through trustees, and no one ever questioned the right. Under the Constitution of 1875, church corporations are provided for, and the precise objection now under consideration is whether complainant, being a foreign corporation, can hold real estate in Missouri, or maintain an action here. Neither the statute nor the Constitution forbids. The state has never made any such objection, and, if we understand the law, no such objection can be made by anyone else. (American etc. Union *v.* Yunt, 101 U. S. 352; Natl. Bank *v.* Matthews, 98 U. S. 621; R. R. Co. *v.* Lewis, 53 Ia., 101, 113; Silver Lake Bank *v.* North, 4 Johns Ch., 370; Wright *v.* Lee, 55 N. W. Rep. 931; s. c. 51 N. W. Rep. 707.)

But independently of this consideration, under the laws of Iowa (Record 311-314), complainant had the right to own property, and such a right will be recognized and enforced in other states unless by some express statute the right to so hold property is denied. (Barnes *v.* Suddard, 117 Ill. 227; American etc. Union *v.* Yunt, 101 U. S. 352; Wright *v.* Lee, 51 N. W. Rep., 706; Tombigbee R. Co. *v.* Kneeland, 4 How., 16.)

Upon the other hand the right of *foreign* corporations to hold property in Missouri is directly recognized by the Laws of 1891, which at page 75 provide:—

> And no foreign corporation established or maintained in any way for pecuniary profit of its stockholders or members shall engage in any business other than that expressly authorized in its charter, or the law of this state under which it may come, nor shall it hold any real estate for any period longer than six years, except such as may be necessary and proper for carrying on its legitimate business. And no corporation incorporated under the laws of any other state, territory, or country, doing business in this state, shall be permitted to mortgage, pledge, or otherwise encumber its real or personal property situated in this state, to the injury or exclusion of any citizen or corporation of this state, who is a creditor of such foreign corporation, and no mortgage by any foreign corporation, except railroad and telegraph companies, given to secure any debt created in any other state, shall take effect as against any citizen or corporation of this state, until all of its liabilities due to any person or corporation in this state at the time of recording such mortgage have been paid and extinguished.

Indeed, if it is decided that foreign corporations cannot hold property here, then vast investments in the state are stricken down with a stroke of the pen.

Art 2, Sec. 8 of the Const., 1875, does not forbid the assertion of title, for here the complainant seeks only to recover and hold the property for church purposes, and there is nothing even in the policy of the law forbidding a foreign corporation to hold land for such purposes. The purpose of the constitution was to have local corporations organized for religious purposes to be organized under one law, and for the purpose of holding land, thereby curing the requirement of the constitution of 1820, making it necessary for a church to hold by a trustee. Here the right to this land existed in the church long prior to the passage of this constitution, and this right could not be forfeited or taken away by any subsequent legislation either constitutional or statutory.

(*b*) *It is no objection that there was no deed made to the corporation.*

The precise contention made below was that even if this were trust property, the incorporation of the unincorporated association did not operate to pass the title to the corporate body. It is difficult to understand or see how, if this property were in fact acquired with the funds of the unincorporated association and the trustee dead a deed could have been made to the corporate body, and it is just as difficult to see how, without a bill in equity, the title could have been obtained as against one who held it in trust and did not recognize the right of the beneficiary.

To properly appreciate the scope of the bill and the force of the proofs in the case it becomes necessary to place the exact circumstances before the court.

Partridge acquired the title on December 19, 1832 (Record 266). The acquisition was, as already seen, in trust for the original church, not an incorporated body. Such being the facts he could not dispose of it as his own, nor would it be treated by a court of equity as his property. It belonged to the church and was trust property, and of such a character that the interests of the church would be protected by a court of equity. In Mannix *v.* Purcell, 46 Oh. St.; s. c. 19 N. E. Rep., 572, there is a learned discussion of this question. Upon March 25, 1839, Partridge executed an instrument designating the infant Cowdery children as trustees for the church. This, if nothing more, was sufficient to operate as a solemn declaration of the trust for the benefit of the church. Afterwards both Partridge and these minor children died. In this view of the case there was left the church, an unincorporated body, without a living trustee. At law, with unincorporated church bodies, title to real estate ordinarily is vested in a trustee, so that there may be an individual or some definite, legal, entity holding the legal title. But if there is no trustee the rights of the unincorporated body do not become forfeited, because it is an axiom that "the trust is never allowed to fail because there is no trustee to hold the legal estate." (Tiedeman in Real Property, Sec. 508.) The rights of the members of the unincorporated body still exist and will be enforced in equity at the instance of the members of the congregation. This doctrine was advanced and enforced in Beatty *v.* Kountz, 2 Peters, 566. If however, there was a legal title in the Cowdery heirs, they conveyed to Bishop Blakeslee. Upon the death of the latter, the church was again without a living trustee. Since then, and on April 10, 1891 (Record 56, 57), the unincorporated body became incorporated and the property rights were in existence at the time of the incorporation. These articles were adopted in accordance with the church rules and church regulations and the provisions of the laws of Iowa (Ev. Smith, Record 81, 82; Kelley 54; Blair 195–197; Stebbins 197), and expressly provide (Record 58) in article six thereof, that the title to all property shall be taken in the name of the corporation, and all trustees are directed to so convey it. We have then a case where the trust was created at a time when a trustee was necessary to properly and conveniently deal with the legal title. There is now no living trustee, but the church is a corporate body which can take the title without any necessity for the intervention of a trustee, and it has been decided that a corpora-

tion may be designated as a trustee. The proper authorities, of the church, according to the rules and regulations of the body, have directed that the property shall pass to the corporation, and that any trustee holding any property for the church shall directly convey to that corporation. Why then, if nothing more, shall not the corporate body become the trustee?

Defendants, upon the death of Hedrick, then trustee, had the court substitute Hill (Rec. 578). There is a state statute so authorizing (Rev. Stat. Mo., 1889, Sec. 8683), and a court of equity would have power to do so independently of any statute. (Tiedeman on Real Property, Sec. 509).

In this case the complainant could have asked for a new trustee but instead of so doing it asked for the property itself. Who, when it alone is the interested party, shall gainsay its right so to do? Whether, according to the rigid rules of law the conveyance operated to pass legal title to the corporation, is immaterial. We are now properly in a court of equity with substance and not shadows to deal with, and where, as has been tersely said, "ways and means, if necessary, will be devised for the purpose of doing justice."

It was claimed that the cases of Frank *v.* Drenkham 76 Mo., 506, and Catholic Church *v.* Tobien, 82 Mo., 418, decide that the incorporation of an unincorporated religious body does not, *ipso facto*, pass the title to the corporation. Judge Philips clearly distinguished these cases (Opinion, Rec. 684), and we might rest here upon this opinion, with the further suggestion that those cases were at law, while this proceeding is in equity to establish a trust, and the court, in its discretion, could appoint the corporation as the trustee.

This has been frequently decided (Chambers *v.* St. Louis, 29 Mo., 543; Vidal *v.* Girard, 2 How., 127; Jones *v.* Habersham, 107 U. S., 174,) even as to foreign corporations. (Thompson *v.* Swope, 24 Pa. St., 474; St. Clair Female Academy *v.* Sullivan, 116, Ill., 375.)

Such was in fact the effect of the decree in this case (Rec. 29, 30), for it shows upon its face the existence of the trust and the purpose for which the property is to be used. But we cannot forbear suggesting that neither of the cases relied on expresses the law since announced in Missouri and as it has been elsewhere declared. The Tobien case was remanded, and in the trial court the church trustees, *after limitation had run*, were substituted as parties plaintiff instead of the corporation. Upon the second appeal (Lilly *v.* Tobien, 103 Mo., 477) it appeared that the reversal was under a misapprehension because there was in fact no corporation (p. 484), yet the

substitution was sustained; and as to the decision on the former appeal it was said:—

> Trustees of a charity are often incorporated for the purpose of executing the trust, and, since the church society was doubtless incorporated to enable it the better to protect the devise in question, the correctness of the conclusion reached in that case, as to the rights of the corporation to prosecute the suit, may well be doubted.

In Keith etc., Co. *v.* Bingham, 97 Mo., 196, it was decided that upon the incorporation of an unincorporated church, title theretofore conveyed to church trustees, *ipso facto*, passed to the corporation. This doctrine was announced in an exhaustive opinion in Miller *v.* Chittenden, 4 Iowa, 252. The doctrine is particularly stated in 20 Amer. & Eng. Encl. Law, p. 804, thus:—

> Where there is no local statute contravening, property may be held by trustees for the use and benefit of an unincorporated religious society under the rule that, at common law, property may be granted to pious uses before there is a grantee in existence competent to take it, in the meantime the fee being in abeyance. The persons to whom the grant is made are seized to the use of the society or church, and, after it has acquired the legal capacity to take and hold real estate the statute executes the possession to the use, and the estate vests.

The same view was taken in M. E. Protestant Church *v.* Adams, 4 Ohio 76; Reformed Church *v.* Veder, 4 Wend. 494, and First Bap. Church *v.* Witherell, 3 Paige, 298.

But in passing we may add that the effect of an adverse decision as to the right of the corporation to the decree would not result in a reversal of the case, for this court, upon appeal, can allow any proper amendment. (National Water Works Company *v.* Kansas City 62, Fed. Rep. 853, 863.) And it is perfectly proper even to avoid limitation to permit the amendment so as to here substitute the Bishop of the church as the complainant. Lilly *v.* Tobein, 103 Missouri, 477, already referred to, is precisely in point upon this subject, and the authorities cited in the opinion amply justify the holding.

So while it is a great source of relief to defendant to dismiss this case so as to be able to then plead limitation to a new action, to accomplish that result it ought to apply to some other tribunal than a court of equity.

We are brought now to the question whether complainant is the true beneficiary of the trust.

7. IF THE PROPERTY WAS IN FACT TRUST PROPERTY FOR THE CHURCH, THEN IF COMPLAINANT CHURCH BE THE SAME FOR WHICH THE TRUST WAS CREATED, IT IS ENTITLED TO THE PROPERTY.

When a church acquires property and is afterwards divided into factions or separate bodies, courts of equity do not hesitate to take hold of questions relating to the property, and they unhesitatingly award it to the representatives who follow the faith as it existed prior to the time of the division. The court which may be relied upon to determine the question only inquires into the faith and belief at such time, and then determines, as another fact, which of the contending parties follows the original faith. The books teach this doctrine with uniformity.

Mr. Justice Strong, in 1875, in his lectures on the Relation of Civil Law to Church Property (pages 45, 59) says:—

> Cases sometimes arise in civil courts in which it becomes necessary to determine which part of a divided church is entitled to the church property . . . In such a case, when controversies arise within the church respecting the ownership or control of property . . . courts of law will inquire which party, or which division, adheres to the form of church government or acknowledges the church connection designated in the conveyance, and adjudge the right to that party. . . . That property the civil court will adjudge to the members, however few in numbers they may be. . . . This rule . . . necessitates an inquiry into the CONSTITUTION and *discipline* of the church . . . to enable the court to discover which of the contending parties adheres to the order. . . . Civil courts will not permit the diversion of a trust. . . . When property is held charged with a trust for the use of a church receiving and maintaining certain religious doctrines, it occasionally happens that its members depart from the faith and embrace other and contrary doctrines, while still claiming to hold the church property. In such a case, very plainly, if the property can be retained by them, it is diverted from the use to which it was first settled. . . . Such a perversion the civil law will not allow. It will interpose its strongest arm to arrest it. . . . In all controversies respecting the right to church property when the deed or will by which it has been acquired indicates that it was the intention of the grantor or deviser that the beneficial use of the property should vest in the church having a specified form of church government, or connection, or form of worship, or holding certain doctrines, courts of law will institute all inquiries necessary to determine who were the real beneficiaries intended, and prevent the diversion of the property to any other uses. And in so doing, they will, if necessary, investigate the doctrines held, or the religious belief of the members . . . to identify the persons for whose use the grant or gift was originally intended.

In 2 Perry on Trusts (3d Ed.) page 734, it is said:—

> **The court cannot change the trust. The majority cannot say, "We**

have changed our opinions and the funds shall hereafter be for the benefit of the people of our faith."

In Angell and Ames on Corporations, page 38, note, it is said:—

Those who adhere to the original doctrines of the church corporation are entitled to the temporalities of the church. . . . Where there is a trust, a court of equity is bound to see it executed according to the intention of the original founders of the charity.

And at section 38 the same authors say:—

Sec. 38.—In this country it is not only obvious, but it has been so expressly held, that no ecclesiastical body has any temporal power to enforce its decisions and ordinances. Its jurisdiction is only advisory, or over the conscience of those who have voluntarily subjected themselves in a spiritual way. Where a civil right depends upon an ecclesiastical matter, it is the civil tribunal and not the ecclesiastical which is to decide. Therefore, where, as well from the testimony as from the terms of a charter incorporating a church, it is apparent that it was in full connection with a synodical body, and not independent of it, as a congregation, if a portion of it secede, the rest, however small in number, secure their corporate existence, and are entitled to all the privileges and property of the corporation.

In 10 American Law Register (New Series), 308, 314, Mr. Chief Justice Fuller, in a leading article, said:—

But it is no longer an open question that civil tribunals will interfere when rights of property or civil rights are involved. "And civil tribunals," as is well remarked by Mr. Innes in his valuable treatise on the "Law of Creeds in Scotland" (p. 323), "have no means of doing justice except by investigating into the differences of doctrine, discipline, or practice . . . which, to the litigants, may be religious differences, but to the Judge, are mere matters of fact bearing upon a question of civil rights. . . . Non-established churches are mere voluntary associations, founded on contract. Their constitutions, canons, rules, and regulations are the stipulations between the parties. Tribunals may be established by agreement for the enforcement of discipline, but they are limited by the terms of the agreement, and must proceed as therein specified. . . . They have no 'jurisdiction' properly speaking, for that implies the existence of a power conferred by the state . . . but that which for convenience may be so termed, is entirely dependent upon the contract, and which never precludes the fullest investigation by the civil courts, in a proper case arising upon the action of such voluntary tribunals and the administration of such relief."

Earle *v.* Wood, 8 Cush. 430, involved a question as to which of two contending religious factions was in the right, and among other things the court said:—

There can be but one regular, legitimate, and legal Monthly Meeting. . . . It is a question of property. . . . There cannot be two adverse owners of the same thing at the same time. . . . Pronouncing in favor of one, is necessarily pronouncing against the other (452–3). It seems

necessary to inquire, What is the true test or standard to decide which is the true Monthly Meeting? . . . (455).

From this view of the constitution, organization, and acknowledged usages of the Quaker body, it appears that the Yearly Meeting has a final and controlling jurisdiction in all matters of faith and religious duty. . . . But . . . there are two conflicting bodies, each claiming to be the true and legitimate Yearly Meeting of New England. We are thus necessarily driven to the inquiry, Which of these conflicting organizations . . . which of the two Yearly Meetings . . . The two Quarterly Meetings, and the two . . . Monthly Meetings are the actual, identical, and real Yearly, Quarterly, and Monthly Meetings? . . . By what test shall this question of identity and continuity be determined?

At one stage of this controversy, it seemed to be supposed that it would depend mainly upon the soundness of faith, an adherence to or dissent from speculative theological opinions and belief, and much evidence was taken upon the subject, and it was alluded to in the learned arguments addressed to us (457). But we are saved the necessity of going further into this supposed test from creeds and opinions. . . . We have no evidence that any organized meeting, Monthly, Quarterly, or Yearly, took any step as a body to promote or establish any opinion or tenets of belief not entirely correct. The charge on the part of John Wilbur and his friends was, the friends of the present plaintiffs (Guerneyites) in the Monthly . . . Quarterly . . . and Yearly Meetings, were endeavoring to advance the works and tenets of John Guerney, which, however, they denied. . . . (460).

But we see . . . no acknowledged change of belief or conduct, but a declaration of what then were and ever had been the doctrine and tenets held by them. Nor do we see any evidence that any other or different opinions had been advanced (460).

We are then brought to test this question by . . . the correct and proper standard; to wit: Whether Earl and his associates . . . or Wood and his associates . . . were the true and rightfully appointed overseers of Swangey Monthly Meeting, according to the discipline, acknowledged to be the CONSTITUTION, and to embody the fundamental laws of the Society of Friends, expounded by the general usages of those persons of most experience and judgment, who have acted under it, and acknowledged its authority (460, 461).

Although we must inquire and decide judiciously by THEIR RULES, UPON THE REGULARITY of these proceedings, it is not with a view of affirming them or setting them aside, but simply because it is incidental to the question of title which we must decide.—P. 461.

There are two bodies claiming to be the true Yearly Meeting. Only one can justly have that character. Nor is it safe to decide this question upon minutes and records alone, because each has its clerk and minutes, which may appear fair and regular, but the jurisdiction must be decided by the evidence.

In Whitelick *v.* Whitelick, 89 Ind., 136, it was said:—

Where a schism occurs in ecclesiastical organization which leads to a

separation into distinct and conflicting bodies, the respective claims of such bodies must be determined by the principles which underlie the control of voluntary associations. If there be within the organization officers or duly appointed persons in whom the powers of such control are vested, those who adhere to the acknowledged organism by which the organization is governed, are entitled to the use of the property without reference to whether they constitute a majority. The title to the property of a divided church is in that part of the organization which is acting in harmony with its own law; and the ecclesiastical laws, usages, customs, principles, and practices which were accepted and adopted by the church before the division took place, constitute the standard for determining which of the contesting parties is in the right.

In Harrison *v.* Hoyle, 24 Ohio 254, it was said:—

Enough [evidence] we think was received to justify us in finding that the Guerneyites . . . are the true members of the Society of Friends, and that the Wilburites are separatists from and not members of the society (p. 273). . . . We do not refer to the opinions of Friends or the decisions of their Yearly Meetings as conclusive on the question before us (p. 284). Civil courts in determining the question of legitimate succession in cases where a separation has taken place, by mutual consent, will adopt its rules and will enforce its policy in the spirit and to the effect for which it was designed.

Similar views have been many times advanced. (Zion Baptist Church *v.* Whitmore, 83 Ia., 138; s. c. 49 N. W. Rep., 81; Koshkonong Congregation *v.* Otteson, 80 Wis., 62; s. c. 49 N. W. Rep., 24; McBride *v.* Porter, 17 Ia., 203; State *v.* Farris, 45 Mo., 183.)

A trust of this nature inuring to foreign corporations is enforced by the federal courts in accordance with the rules of the State court. (Jones *v.* Habersham, 107 W. S. 174.) In the State court the trust would be treated as charitable in its nature and such that a corporation can execute. (Chambers *v.* St. Louis, 29 Mo., 543.) So also say the federal courts. (Vidal *v.* Girard, 2 How. 127; Jones *v.* Habersham, 107 W. S., 189.) And one needs but go a step further to recognize what the courts have said; *i. e.*, foreign corporations can take the trust. (Thompson *v.* Swope, 24 Pa. St., 474.)

Judge Philips, in his opinion (Record 702, 703), recognizes and enforces the doctrine. In this case there can be no reasonable doubt of its application, because Richard Hill, the present trustee for the defendant's church, testified that he held the property for the Original Church, his only contention being that the defendant was that Original Church. (Record pp. 468, 476, 477, 478.)

This brings us then to the consideration of the question, Which of these churches is the true follower and the true successor of the church represented by Joseph Smith?

8. COMPLAINANT CHURCH IS THE SUCCESSOR OF THE ORIGINAL CHURCH ESTABLISED IN 1830.

In our statement we have attempted to collate many facts, and the court will pardon us if, in this argument, we deal in repetitions.

The Original Church, organized April 6, 1830, remained without break or division of any kind until the death of Joseph Smith and Hyrum Smith, June 27, 1844. As to this there is no dispute. (Ev. Jos. Smith 69–123; Wm. B. Smith 123–138; W. W. Blair 179; John H. Carter 212–220; E. C. Briggs 229–246; H. Rathbun, Sr. 247–259; W. Woodruff 323–345; Jason W. Briggs 425–439.)

The Original Church thus formed adopted a code for its government, as to doctrine and tenets established on the Holy Bible, Book of Mormon, and certain revelations from God submitted to and adopted by the church, afterwards compiled with church acts and resolutions and published under the title of "Book of Doctrine and Covenants." The doctrine and tenets presented, among others, faith, repentance, baptism for remission of sins, laying on of hands for confirmation, industry, sobriety, and virtue; gathering together for mutual aid, advice, and assistance, resurrection of the dead, eternal judgment, and advising all to marry, but prohibiting polygamy. (Ev. Smith, Rec. 73, 74, 78–88; Wm. B. Smith, 123, 125, 133, 135, 136, 137; John H. Carter, 216, 219, 220; E. C. Briggs, 234; Hiram Rathbun, Sr., 256, 259.)

The government of the church was vested in a presidency, consisting of a president and two counselors, a quorum of twelve called "Apostles" having a president; a quorum of seventy or "Quorums of Seventies," each having a president, and when more than one quorum of seventy, a president of the presidents thereof; elders, priests, teachers, deacons, and a bishop. (Ev. W. W. Blair, Rec. 162–164.)

There being no substantial dispute as to the doctrine of the Original Church, except as to polygamy (a subject which will be hereinafter considered), no time need be taken in enlarging thereon Witness after witness qualified to speak testify that the doctrine, government, and officers of the complainant's church were the same as the original. Indeed, the evidence is substantially without any dispute as to this. (Ev. Whitehead, Rec. 64, 65–67; Jos. Smith, 69–123 (see particularly 73, 76, 82, 96, 97, 101, 118); Wm. B. Smith, 126; W. W. Blair, 141, 142, 149, 150, 162–164, 165, 179–182, 183, 193; John H. Carter, 217; E. C. Briggs, 230, 235, 236, 237, 238.)

The Utah Church has disregarded and departed from the faith of the Original Church in this: it taught and practiced polygamy, blood atonement, Adam-God worship, and instead of following the

laws of the church and the government thereof, substituted in its stead the rule that the members of the church should obey the counsel of "The Twelve" in all things. (Ev. Joseph Smith, Rec., 119; Wm. B. Smith, 125, 126; W. W. Blair, 143, 144; John H. Thomas, 286; W. Woodruff, 323, 345; John H. Carter, 211, 212, 214, 215.)

The Hedrickites, or defendant church, consist of about 13 or 14 members, and never had a membership of as much as a hundred. (Ev. Alma Owens, Rec. 459; Richard Hill 469, 470, 471, 472.) Although producing no church books and making no showing as to faith and doctrine of the church (Col. Southern in his brief on page 88 so admits), the testimony affirmatively shows that its doctrine differs from and fails to adhere to the faith and organization of the Original Church in this: it fails to provide for or contemplate, but rejects the idea of a presidency, consisting of a president and two counselors, The Twelve, and Quorums of Seventy. It has neither a prophet nor apostles, and claims no power in its president as a prophet, seer, or revelator. Its president is created by vote; it rejects and ignores all revelations and acts of the church in general after 1833, 1834, and 1835 (not being able to designate which of the three years), but shows no reason for any such rejection; it rejects the law relating to tithes and offerings, the doctrine of baptism for the dead, and the Book of Doctrine and Covenants (Answer, Record 53; Ev. Hill, 467, 471, 474, 475, 477); and that the court may readily see the faith, doctrine, and organization of the four churches, the original, complainant's, the Utah, and defendant's, we here compile the same with appropriate references to the Record.

FAITH AND DOCTRINE OF THE ORIGINAL CHURCH ORGANIZED APRIL 6, 1830.

1. Standard books of doctrine and Church Government: The Bible, Book of Mormon, and Book of Doctrine and Covenants.—Rec. 61, 81, 325.

2. Statement of principles:—

We believe in God the Eternal Father, and in his Son Jesus Christ, and in the Holy Ghost.

We believe that men will be punished for their own sins and not for Adam's transgression.

We believe that through the atonement of Christ all mankind may be saved by obedience to the laws and ordinances of the gospel.

We believe that these ordinances are 1st, Faith in the Lord Jesus Christ; 2d, Repentance; 3d, Baptism by immersion for the remission of sins; 4th, Laying on of hands for the gift of the Holy Ghost.

We believe that a man must be called of God by "prophecy, and by lay-

ing on of hands" by those who are in authority to preach the gospel and administer in the ordinances thereof.

We believe in the same organization that existed in the primitive church, viz.: apostles, prophets, pastors, teachers, evangelists, etc.

We believe in the gift of tongues, prophecy, revelation, visions, healing, interpretation of tongues, etc.

We believe the Bible to be the word of God as far as it is translated correctly; we also believe the Book of Mormon to be the word of God.

We believe all that God has revealed, all that he does now reveal, and we believe that he will yet reveal many great and important things pertaining to the kingdom of God.

We believe in the literal gathering of Israel and in the restoration of the Ten Tribes. That Zion will be built upon this continent. That Christ will reign personally upon the earth, and that the earth will be renewed and receive its paradisaic glory.

We claim the privilege of worshiping Almighty God according to the dictates of our conscience, and allow all men the same privilege let them worship how, where, or what they may.

We believe in being subject to kings, presidents, rulers, and magistrates, in obeying, honoring, and sustaining the law.

We believe in being honest, true, chaste, benevolent, virtuous, and in doing good to *all men;* indeed we may say that we follow the admonition of Paul, "we believe all things, we hope all things," we have endured many things and hope to be able to endure all things. If there is anything virtuous, lovely, or of good report or praise worthy we seek after these things.—Rec. 73–75.

That one man should have one wife; and one woman, but one husband except in case of death, when either is at liberty to marry again.—Rec. 76, 79, 325.

That the laws of the land should be kept and maintained and the separation of church and state.—Rec. 84, 85.

That Church aid is properly rendered by voluntary contributions under the law known as "tithes and offerings."—Rec. 141, 173, 325.

The doctrine of probation and instruction in the faith of Christ after death and Baptism for the dead.—Rec. 132, 141.

3. Church Government.

1. Of a First Presidency—consisting of a President and two Counselors.
2. A Quorum of the Twelve (a traveling High Council).
3. A "Standing High Council" of the church; and at each "stake" a similar subordinate Standing High Council, consisting of twelve chosen for that purpose.
4. A High Priests' Quorum.
5. One or more quorums of Seventy, not exceeding seven.
6. Quorums of Elders.
7. Bishops, consisting of a Presiding Bishop, and associate or local

bishops, said bishops having temporal jurisdiction subject to the general direction of the church, and higher church authorities.

8. Quorums of Priests.
9. Quorums of Teachers.
10. Quorums of Deacons.

—Ibid. 82, 125, 126, 162, 163, 188, 189.

FAITH AND DOCTRINE OF THE REORGANIZED CHURCH, THE COMPLAINANT AND APPELLEE HEREIN.

1. Standard Books of Doctrine and Church Government: The Bible, Book of Mormon, and Doctrine and Covenants.

2. Statement of Principles.

We believe in God the Eternal Father, and in his Son Jesus Christ, and in the Holy Ghost.

We believe that men will be punished for their own sins and not for Adam's transgression.

We believe that through the atonement of Christ, all men may be saved by obedience to the laws and ordinances of the gospel.

We believe that these ordinances are:—

1. Faith in God and in the Lord Jesus Christ.
2. Repentance.
3. Baptism by immersion for the remission of sins.
4. Laying on of hands for the gift of the Holy Ghost.
5. We believe in the Resurrection of the Body; that the dead in Christ will rise first, and the rest of the dead will not live again until the thousand years are expired.
6. We believe in the doctrine of Eternal Judgment, which provides that men shall be judged, rewarded, or punished, according to the degree of good, or evil, they shall have done.

We believe that a man must be called of God, and ordained by the Laying on of Hands of those who are in authority, to entitle him to preach the Gospel, and Administer in the Ordinances thereof.

We believe in the same kind of organization that existed in the primitive church, viz: Apostles Prophets, Pastors, Teachers, Evangelists, etc.

We believe that in the Bible is contained the word of God, so far as it is translated correctly. We believe that the canon of scripture is not full, but that God, by his Spirit, will continue to reveal his word to man until the end of time.

We believe in the powers and gifts of the everlasting Gospel, viz.: the gift of faith, discerning of spirits, prophecy, revelation, healing, visions, tongues, and the interpretation of tongues, wisdom, charity, brotherly love, etc.

We believe that Marriage is ordained of God; and that the law of God provides for but one companion in wedlock, for either man or woman, except in cases where the contract of marriage is broken by death or transgression.

We believe that the doctrines of a plurality and a community of wives are heresies, and are opposed to the law of God.

We believe that in all matters of controversy upon the duty of man toward God, and in reference to preparation and fitness for the world to come, the word of God should be decisive and the end of dispute; and that when God directs, man should obey.

We believe that the religion of Jesus Christ, as taught in the New Testament Scriptures, will, if its precepts are accepted and obeyed, make men and women better in the domestic circle, and better citizens of town, county, and State, and consequently better fitted for the change which cometh at death.

We believe that men should worship God in "Spirit and in truth;" and that such worship does not require a violation of the constitutional law of the land.

We claim the privilege, of worshiping Almighty God according to the dictates of our conscience, allow all men the same privilege, let them worship how, where, or what they may.—Ex. M. Rec. 74–76.

3. Church Government.

1. Of a First Presidency—consisting of a President and two Counselors.
2. A Quorum of the Twelve (a traveling High Council).
3. A "Standing High Council" of the church; and at each "stake" a similar subordinate Standing High Council, consisting of twelve chosen for that purpose.
4. A High Priests' Quorum.
5. One or more quorums of Seventy, not exceeding seven.
6. Quorums of Elders.
7. Bishops, consisting of a Presiding Bishop, and associate or local bishops, said bishops having temporal jurisdiction subject to the general direction of the church, and higher church authorities.
8. Quorums of Priests.
9. Quorums of Teachers.
10. Quorums of Deacons. —Rec. 56, Art. Inc.

OF THE PRINCIPLES AND FAITH OF THE ORIGINAL CHURCH ORGANIZED 1830, THE APPELLANTS (DEFENDANTS) REJECT THE FOLLOWING:—

1. Of Doctrine.

1. Respondents reject one of the Standard Books, the Book of Doctrine and Covenants.—Ans. Rec. 53; Ev. Hill 474.
2. They "Repudiate the doctrine taught by the church in general after 1833, 1834, and 1835."—Ev. Hill, 474.
3. The law relating to "Tithes and Offerings."
4. The Doctrine of Baptism for the Dead.

2. Church Government.

1. Reject the law Relating to the Presidency.
2. Reject the Twelve—Traveling High Council.

3. Reject Seventies or Evangelists.
4. Reject a Standing High Council.—Ibid. 467.

THE UTAH FACTION, SET OUT BY APPELLANTS (DEFENDANTS), HAVE CHANGED THE PRINCIPLES AND DOCTRINE OF THE ORIGINAL CHURCH AND ADDED THE FOLLOWING:—

1. Of Doctrine.

1. Added as a Book of Doctrine and Belief a book called the "Pearl of Great Price."—Rec. 323.

2. Changed in their teaching the first statement in the article of Faith and taught the Doctrine of Adam-God worship.—218, 224, 286, 295, 296, 490, 497.

3. Have taken out the section on Marriage in the Book of Doctrine and Covenants and Inserted instead thereof a Purported Revelation, on Plural Marriage—Changing the Doctrine and Practice of Monogamy to that of Polygamy.—Rec. 212, 214, 217, and testimony of Respondents' Witnesses W. Woodruff and Lorenzo Snow, Rec. 341, 354.

4. Introduced Societies of a Secret Order and Established Secret Oaths and Covenants.—484, 485, 486, 487, 489, 498, 502, 516, 517.

5. Taught the doctrine of blood atonement.—218, 219, 220, 295.

2. Of Government.

1. Changed the duties of the Presidency and Twelve, and Established the doctrine to "Obey Counsel."—219, 286, 296, 498.

2. Changed the order of the Seventy or Evangelists.—499, 505. Ex. E. Sec. 3, par. 43.

RECOGNITION OF THE LINE OF PRESIDENCY.

There is one feature about this case which stands preëminent; it is without dispute, and stamps the complainant's church as the true successor; and that is that Joseph Smith's son was, by the law of the church, designated as the successor of his father, and in accordance with church rules he was set apart for that purpose. In the Book of Doctrine and Covenants (Exhibit E. Sec. 14, par. 2, Record 80) there is this:—

But verily, verily I say unto you, that none else shall be appointed unto this gift, except it be through him, for if it be taken from him he shall not have power, except to appoint another in his stead; and this shall be a law unto you, that ye receive not the teachings of any that shall come before you as revelations or commandments; and this I give unto you that you may not be deceived, that ye may know they are not of me. For verily I say unto you, that he that is ordained of me shall come in at the gate and be ordained as I have told you before, to teach those revelations which you have received, and shall receive through him whom I have appointed.

That this referred to the leadership of the church by the son is shown by other quotations from church records (Exhibit J, Sec. 104.

par. 18, Record 325, 339), and by the undisputed testimony of witnesses. (Ev. Joseph Smith, Record 95; Wm. B. Smith 136, 138; W. W. Blair 146, 147, 151, 159.)

Not only was such the law of the church, but in the lifetime of Joseph Smith, and in accordance with the church rules and regulations, the son was by him set aside and formally designated as the true successor. (Ev. Jas. Whitehead, Record 60, 64, 65, 68, 69; Jos. Smith 73, 76, 82, 96, 97, 101, 118; Wm. B. Smith 125, 133, 134, 136; W. W. Blair 146–149, 150–154, 159, 160, 173, 174, 178; Jno. H. Carter 212, 213, 216; Jno. H. Thomas 287, 288; Jason W. Briggs, 427, 438.)

The followers of complainant's church are full believers in this doctrine, and in 1860 duly ordained this son as the true successor. (Ev. Jos. Smith Record 95, 110, 111, 122, 123; E. C. Briggs, 231–233; W. W. Blair, 159.) Hence, if all factions followed the original church in all respects except this one, the complainant must be held to be the true successor.

POLYGAMY NOT AN ORIGINAL TENET.

Probably nothing more need be said on this subject, but there is interjected into the case the intimation that the original church taught polygamy. Judge Philips (Rec. 704) denied the contention. Certain it is that all the church books taught monogamy. (Rec. 76, 79, 158, 159, 160, 164, 339.)

October 1, 1842, when somebody had undertaken to teach the theory of polygamy, the leaders of the church and their wives published cards denouncing the doctrine (Rec. 335, 409), and that it was publicly denounced by Joseph Smith and the church in general, and never was a church doctrine, is overwhelmingly established by the evidence. (James Whitehead, Record 61; Joseph Smith, 73, 76–79, 83; Wm. B. Smith, 124; W. W. Blair, 171, 172, 178; John H. Carter, 212, 213–215, 216, 217, 218, 220; John Taylor, 222–225; E. C. Briggs, 238; John H. Thomas 286, 287.)

Granville Hedrick's review (the original exhibit having been certified here) is such a complete refutation that it should be read in full to be properly appreciated. (Record 291–294.)

The defendant's evidence on this subject, if believed, goes no further than to show that possibly some of the leaders secretly taught and practiced the doctrine, but even as to this some of them say that these private teachings were not until after Joseph Smith's death. (Ev. W. Woodruff, Rec. 324, 325, 334, 335, 339, 340; Melissa L. Willes, 344–348; Lorenzo Snow, 348–351; L. O. Littlefield, 358–364; J. C. Kingsbury, 365; Mercy Rachel Thompson, 375–390; Bathsheba Smith, 390–395; Joseph B. Noble, 399–403; Lucy W. Kimball,

403, 411; Mary Ann West, 411–416; Priscilla M. Staines, 416; Cyrus H. Wheelock, 416–421; Samuel W. Richards, 422–425.) Mr. Tichenor's concession (Brief in Court of Appeal 24, c.) to this effect makes it unnecessary to quote from the testimony.

Polygamy was never known to the Book of Doctrine and Covenants until put in by the Utah church in their published edition of 1876. It was never promulgated as a church doctrine until 1852, when Brigham Young produced a purported revelation to Joseph Smith of date of 1843. (Ev. Bathsheba Smith, Record 394; Joseph B. Noble, 400; Lorenzo Snow, 351, 352; J. C. Kingsbury, 365, 368, 370; Mercy Rachel Thompson, 381, 389; W. Woodruff, 340, 341.)

There is one witness who claims to have seen the original revelation, and he says it was written on two pages of foolscap paper, and that he copied it in one hour or less. (Rec. 369.)

The revelation itself is of such length that it could not be compressed into anything near such space, nor could it be copied by the most rapid penman in less than several hours' time. See Utah edition Book of Covenants for 1876, defendants' Exhibit A., page 423. The witness, James Whitehead, who was the private secretary of Joseph Smith, testifies to having seen the same paper containing a revelation had by Bishop Whitney; and he gives the proper dimensions of the same but declares that it did not teach or authorize the doctrine of polygamy. (Rec. 505, 507.)

A stranger to the Mormon faith will become impressed, upon reading this record and studying it in all its details, that polygamy was the inspiration of Young to retain himself in power. All the church books taught that Joseph Smith's son was the chosen head of the church. All the Smiths were against polygamy. At the time of the father's death in 1844 the eldest son was but twelve years of age and hence not of sufficient capacity to rule. His majority would be reached in 1853. One year before this Young had the church under him adopt polygamy as its doctrine. Once adopted, his leadership was not in danger, for Smith would never accept such a doctrine.

9. DEFENDANTS' CLAIM OF LEGAL TITLE RESTS ON THE POOL DEED.

The defendants' claim of title to this property, so far as conveyances are concerned, begins in 1848 after the execution of the Cowdery deed, and is as follows:—

(*a*) *Pool Deed.*

A deed (Rec. 546) dated May 5, 1848, recorded June 16, signed by the widow and three heirs of Partridge, quitclaiming the 63 acres

covered by the deed to Partridge in 1832. Two of the Partridge heirs did not sign (Ev. Emily D. P. Young, Rec, 208–211, 395) and the deed was not properly acknowledged. (Opinion Judge Philips, Rec. 691, 693; *infra*, Div. 11.) Under an execution upon a judgment rendered against Pool in September, 1846, the property was sold to John Maxwell. (Rec. 550–553.)

(*b*) *Platting of ground.*

In 1851 (Rec. 555, 618, 619) the property was platted by S. H. Woodson who had not title and John Maxwell into lots and blocks, and marked thereon are "Temple Lots" numbered 15 to 20 inclusive.

(*c*) *Mesne conveyances reaching Hedrick, trustee.*

There are various mesne conveyances (Rec. 562–574) arising from a partition proceeding (Rec. 556) between Woodson and Maxwell, until finally deeds were made to Granville Hedrick (Rec. 575, 576), in trust for the Church of Christ of Latter Day Saints, the name inscribed on the temple at Kirtland, Ohio. (Ev. Smith, Rec. 137.)

(*d*) *Appointment of Hill as trustee.*

By an *ex parte* proceeding in the state court (Rec. 578) Hill was, upon the death of Hedrick, appointed his successor in trust, and Hill, as already stated, testified (Rec. 468, 476, 477, 478) absolutely and unqualifiedly that he held the property as and for the Original Church.

10. THE POOL DEED WAS NOT PROPERLY ACKNOWLEDGED.

While Judge Philips decided (Rec. 665) that the Pool deed was not admissible in evidence, he did not place the recovery upon such ground. But even if admissible in evidence, it was not properly acknowledged, and hence not of record, so that there stood on the face a break in the chain of title that put all subsequent purchasers on inquiry, hence anyone acquiring of the Partridge heirs would have been advised of the facts testified to by Emily D. P. Young, one of the Partridge heirs, (Rec. 208–210,) that Temple lot belonged to the church.

The unvarying rule is that unless a deed is properly acknowledged it is of no force and effect so far as recording is concerned. It is the same as if not recorded. (Garner *v.* Barry, 28 Mo., 438. Coloway *v.* Fash, 50 Mo., 420; Dunlop *v.* Henry, 76 Mo., 106; Hogue *v.* Hibb. 94 Mo., 489.)

The Revised Statutes of 1845 were in force at the time the

acknowledgment of the Pool deed was taken. That acknowledgment (Rec. 547) was taken by a county clerk, attested by his private seal.

Sections 17 and 19 of chapter 32 of the Revised Statutes of 1845 provide:—

Sec. 17.—The proof of acknowledgment of every conveyance or instrument in writing affecting any real estate in law or equity, shall be taken by some one of the following courts or officers. *First*, If acknowledged or proved within this state, by some court having a seal, or some judge, justice, or clerk thereof, or some justice of the peace of the county in which the real estate conveyed is situated. *Second*, If acknowledged or proved without this state and within the United States, by any court of the United States, or of any state or territory having a seal, or the clerk of any such court. *Third*, If acknowledged or proved without the United States by any court of any state, kingdom, or empire, having a seal, or the mayor of any city having an official seal.

Sec. 19.—Such certificate shall be: *First*, When granted by a court, under the seal of the court. *Second*, When granted by the clerk of the court, under the hand of the clerk and seal of the court to which he is a clerk. *Third*, When granted by an officer who has a seal of office, under the hand and official seal of such officer. *Fourth*, When granted by an officer who has no seal of office, under the hand of such officer.

The explicit language of section 17 is that "if acknowledged or proved within this state," then the acknowledgment shall be taken "by some court *having a seal*, or some judge, justice, or clerk *thereof*," *i. e.* of that court which has a seal. The section thus specifically names those *authorized* to take acknowledgments, and section 18 provides for the officer *thus authorized* by section 17, making a certificate of acknowledgment so taken. Section 19 does not attempt to say *who is authorized* to take an acknowledgment, but provides for the signing and sealing of the certificate spoken of by section 18, and in express terms it provides that when the certificate is granted by the clerk of the court it shall be "under the hand of the clerk *and the seal of the court to which he is clerk*," but "when granted by an officer who has no seal of office, under the hand of such officer." When we remember that this section does not provide as to who has power to take the acknowledgment, this latter clause must be said to refer to the justice of the peace mentioned in section 17. An examination of chapters 92, 93, and 94 as to justices of the peace fails to disclose any provision for a seal. Section 21 of chapter 59, under the head of evidence, provides for a certificate from a justice without a seal.

This shows that no seal was to be provided by a justice. It is

significant that section 17 made no provision as to notaries, and yet notaries were recognized by chapter 124 in sections 1, 2, and 3.

This shows the legislature specifically pointed out and designated just the persons who could take an acknowledgment. It was not every officer, nor every clerk; it was only the clerk of a court *which had a seal.*

The result is that this deed was not entitled to record because it was not acknowledged. It was claimed below that section 4864 (Rev. Stat. Mo. 1889) legalized and made good the defective acknowledgment. That section originally appeared in the laws of 1847, at sections 8 and 9, page 95, in this language:—

Sec. 8. The records heretofore made by the recorder of the proper county, by copying from any deed of conveyance, deed of trust, will, or copy of a will, that has neither been proven nor acknowledged, or which has been proved or acknowledged, but not according to the law in force at the time the same was done, shall, from and after the passage of this act, impart notice to all persons of the contents of such instruments; and all subsequent purchasers and mortgagees, shall be deemed in law and equity, to purchase with notice thereof.

Sec. 9. Certified copies, or any other sort of copies, of such records as are contemplated in the immediately preceding section, shall not be received in evidence, until the execution of the original instrument or instruments from which such records were made, shall have been duly proven, according to the usages and customs of the common law.

The same provision was carried forth in the Revised Statutes of 1855, p. 731, Sec. 46; in the revision of 1865, p. 582, Sec. 35; in the revision of 1879, p. 383, Sec. 2305, 2306; and remained in force until 1887, when they were made to read:—

Sec. 1. That section 2305 of the Revised Statutes of Missouri, 1879, be and is hereby repealed.

Sec. 2. The following shall take the place of said repealed section: Section 2305. All records made by the recorder of the proper county, one year before this act takes effect, by copying from any deed of conveyance, deed of trust, mortgage, will, or copy of a will or other instrument of writing, whereby any real estate may be affected in law or in equity, that has neither been proven or acknowledged, or which has been proven or acknowledged, but not according to the law in force at the time the same was recorded, shall hereafter impart notice to all persons of the contents of such instruments; and hereafter when any such instrument shall have been so recorded for the period of one year, the same shall thereafter impart notice to all persons of the contents of such instruments, and all subsequent purchasers and mortgagees shall be deemed to purchase with notice thereof.

This latter act now appears as sections 4864, 4865. The rule of

construction in Missouri is that carrying forth an old law into a revision was not a reënactment, but mere continuation of the old law as originally passed. (St. Louis *v.* Alexander 23 Mo. 483, 509; Cape Girardeau *v.* Riley 52 Mo. 424, 429; Pool *v.* Brown 98 Mo., 675, 680, 681.) The result is that up to 1887 section 4864 was to be read just as if the provision were in reference to records made one year *prior* to the passage of the act of 1847. The result is that the Pool deed was never properly acknowledged and hence not properly recorded and up to time 1887, there was no legalization of the recording.

11. DEFENDANTS DO NOT HOLD AS OR UNDER AN INNOCENT PURCHASER FOR VALUE WITHOUT NOTICE.

It still remains to be determined what weight shall be given to the defense asserted by the answer in this case, that the defendant holds under innocent purchasers. The origin of defendants' title being after the execution of the Cowdery deed, it is manifest that the defendants' claim of record title to the land is inferior, unless there is a holding under an innocent purchaser for value.

The claim of innocent purchaser was interjected in the answer. The rule seems to be that in such cases the prior conveyance must stand and the prior equities be enforced, unless the defendant first pleads and then establishes by proof that its title was acquired for value in good faith and without notice. Boone *v.* Chiles, 10 Pet. 177, 211, 212, considers the question when one can avail himself of the claim that he is an innocent purchaser for value, and upon that subject Mr. Chief Justice Baldwin says:—

"*But this will not be done on mere averment or allegation;* the protection of such bona fide purchase is necessary only when the plaintiff has a prior equity; which can be barred or avoided only by the union of the legal title with an equity, arising from the payment of the money, and receiving the conveyance without notice, and a clear conscience. It is setting up matter not in the bill; a new case is presented, not responsive to the bill, but one founded on a right and title operating, if made out, to bar and avoid the plaintiff's equity, which must otherwise prevail. (9 V. 33, 34.) The answer setting it up is no evidence against the plaintiff, who is not bound to contradict or rebut it. (14 J. R. 63, 74; 1 Munf. 396, 7; 10 J. R. 544, 8; 2 Wheat. 383; 3 Wheat. 527; 6 Wheat. 468; 1 J. C. 461.) *It must be established affirmatively by the defendant; independently of his oath.* (6 J. R. 559; 1 J. R. 590; 17 J. R. 367; 18 J. R. 532; 2 J. C. 87, 90; 4 B. C. 75; Amd. 589; 4 V. 404; 587; 3 J. C. 583.) In setting it up by plea or answer, it must state the deed of purchase, the date, parties, and contents briefly; that the vendor was seized of fee and in possession; the consideration must be stated, with a distinct averment that it was bona fide and truly paid, independently

of the recital in the deed. Notice must be denied previous to and down to the time of paying the money, and the delivery of the deed; and if notice is specially charged, the denial must be of all circumstances referred to, from which notice can be inferred; and the answer or plea show how the grantor acquired title. (Sugden 766, 770; 1 Ath. 384; 3 P. W. 2801, 243, 307; Amb. 421; 2 Atk. 230; 8 Wheat. 449; 12 Wheat. 502; 5 Pet. 718; 7 J. C. 67.) The title purchased must be apparently perfect, good at law, a vested estate in fee simple. (1 Cranch. 100; 3 Cranch, 133, 5; 1 Wash. C. C. 75.) It must be by a regular conveyance; for the purchaser of an equaitable title holds it subject to the equities upon it in the hands of the vendor, and has no better standing in a court of equity. (7 Cranch. 48; 7 Pet. 271; Sugden, 722.) Such is the case which must be stated to give a defendant the benefit of an answer or plea of an innocent purchaser without notice; *the case stated must be made out*, evidence will not be permitted to be given of any other matter not set out. (7 Pet. 271.)

Such are the privileges of innocent purchasers, and such the guards against those who may assume their character in courts of equity; we have only to apply their law to the answers of Chiles and Clay; together with the exhibits and proofs in the case, to ascertain whether Clay filled that character when he conveyed to Chiles, or at any other time. The answers are as barren of the averments necessary to make a case of such a purchase as would be protected against the prior equity of the plaintiffs, as the record is of the proof of any fact to support it. Nor does the consideration of the deed from Newland and wife to Clay, bring the case any nearer to the established rules and principles of equity.

In Nickerson *v.* Meacham, 14 Fed. Rep., 881, 883, 884, Judge McCrary announced the prevailing rule in the Federal Court in this language:—

A party relying on the defense that he is a bona fide purchaser entitled to hold notwithstanding a prior equity, *must establish his defense by proof. It is an affirmative defense.* The statement of a consideration in the deed is not sufficient, but actual payment before notice must be shown. The facts giving the right of protection must be alleged and proved. (Abb. Tr. Ev. p. 715, Sec. 38 and cases cited.) The same rule is laid down in the case of Boon *v.* Chiles. 10 Pet. 177.

In Lakin *v.* Sierra etc., Co., 25 Fed. Rep., 337, 341, 342, Judge Sawyer said:—

I think the defendant's plea for protection as a bona fide purchaser for value, without notice, fails under the proofs in the case. That plea involves two questions: (1) of payment of value; (2) of notice; both of which must be resolved in favor of the defendant in order to support the plea; but neither of which can be so resolved upon the proofs. The burden is on the defendant to prove that some new and valuable consideration passed from it in the purchase of the property after the equity of Thomson and McGee had accrued. An acknowledgment of payment in a deed is no evidence of such payment as against the owner of a prior equity. (Colton *v.* Seavey 22

Cal., 497; Long *v.* Dollarhide, 24 Cal., 218; Galland *v.* Jackman, 26 Cal., 80; Boon *v.* Chiles, 10 Pet. 177, 211.

It has been decided in other jurisdictions that the burden is upon defendants to prove themselves or grantors innocent purchasers. (Landers *v.* Bolton, 26 Cal., 393; Long *v.* Dollarhide, 24 Cal., 218; Shotwell *v.* Harrison, 22 Mich., 410; Williams *v.* Shelley, 37 N. Y., 375.) And so in the state court, to take advantage of the failure to record the deed, it has been uniformly ruled that the subsequent purchaser must affirmatively prove that he bought in good faith for value and without notice. (Halsa *v.* Halsa, 8 Mo., 303; Bishop *v.* Schneider, 46 Mo., 472, 482; Mastin *v.* Halley, 61 Mo., 196, 198.) Hence we say that the rules in the federal and state courts upon this subject are the same, and this court cannot go astray in adopting them.

Testing the proof by such a rule, there is nothing to show that Pool, or anyone under him, ever paid any value or bought in good faith or without notice, unless it be said that the recital of consideration in the deed is proof of the payment of value, which it is not. (Simmons Creek Coal Co. *v.* Doran, 142 U. S., 417, 537.)

But if the issue of "innocent purchaser" were dependent upon the proof made by complainant, there ought to be no doubt about the result so far as this case is concerned. The learned trial judge found the facts to be that there was no innocent purchaser. (Rec. 697, 698.) The rule in Missouri as to notice was thus stated in Benoist *v.* Darby, 12 Mo., 206:—

> Where particular knowledge of a fact is sought to be brought home to a party, evidence of the general reputation and belief of the existence of that fact among his neighbors is admissible as tending to show that he also had knowledge as well as they.

The same doctrine has been stated in Gordon *v.* Ritenour, 87 Mo., 54; Crane *v.* Mo. Pac. Ry. Co., 87 Mo., 596. The rule itself is so reasonable that authority is scarcely necessary to support it.

Now Pool was a resident of Jackson County. (See Pool deed Record 546.) The notoriety of the Temple Lot is established by the oldest settlers. (Ev. Robt. Weston, Record 204, 284, 285; Isaac N. Rodgers, 205; Wm. McCoy, 205, 206; Wm. R. Wilson, 479; John H. Taylor, 480, 481.)

So notorious was the fact that when, in 1851, the land was platted the adjoining street was named "Temple Street," thus recognizing what was generally known, that this was the temple property. (Record 618, 619.) The lots appear so designated on the plat.

Pool obtained his deed May 5, 1848, and recorded it June 16 of the same year. (Record 546.) At this time there was a judgment against him and immediately after the recording his title was sold

(Tran. Woods *v.* Pool, Record 550-552), so that it is fair to infer that he was not in good faith buying the property as his own. Insolvent persons and judgment debtors do not do so. More than this, he took a deed from but three of the five heirs (Ev. Emily D. P. Young, Record 208, 210), and yet had his deed (Ibid. 246) upon its face purport to convey the entire title, and this deed used the expression "quit claim," which at least is a circumstance to be considered. All these circumstances, read in connection with the testimony of Emily D. P. Young (Record 208-210), can but impress one with the truth of the statement that Pool was not in good faith an innocent purchaser for value. Judge Philips so held (Opinion, Par. 8, Record 695, 696.)

Complainant cannot help it that Mrs. Young was evidently averse to helping its cause. She was the widow of Brigham Young of the Utah Church (Record 396), and that church, as has already been shown, was actively aiding the Defendant in defeating this cause. It is true in her testimony she speaks of her understanding, yet this testimony was received without objection, and it is equivalent to her stating what her impressions were; and to impressions a witness can always testify, her credibility on that account, being for the trier of facts. (Abbott's Trial Ev. 745.)

All that has been said as to Pool applies to those claiming under him. Each purchaser after the Pool deed, when he went to the record was certain to find a break in the title, for, as will be seen in another part of this argument, the deed was the same as if it had never been put upon the record, because there was no sufficient acknowledgment. Therefore, so far as the record was concerned there was no recorded deed divesting the interest of Partridge. This was sufficient to put intending purchasers on inquiry, which, if followed out, would have shown the truth, because inquiry of Emily D. P. Young, the daughter of Partridge, would, if her testimony (Rec. 208-210) be true, have disclosed the truth as to the nature of the trust and in whose favor it existed. More than this, Granville Hedrick was a member of the original church (Record 145) and took part of the property in trust for that church in 1868 (Ibid. 575), and the remainder of it in 1877. (Ibid. 576.)

But all this is probably immaterial in this case, for Richard Hill, the present trustee, declares in his testimony that he holds the property in trust for the Original Church, his only claim being that his is that original. His testimony in that regard (Record 468) is as follows:—

Q.—Is it not true that you claim, and hold, and have always so claimed

and held since you have been the Trustee, to hold the property in trust for the legal succession of the church that was organized in 1830?

A.—In no other way have we held it than for the church, and we claim to be the church in legal succession from 1830, down to the present. We are holding it in trust for the church which is represented by us and which we claim is the church that was organized by Joseph Smith, on the 6th day of April, 1830, as history records it. We claim to hold the property in that way, as being part and parcel of the church organized at that time.

The deed which Hedrick took as trustee shows on its face a conveyance to the "Church of Christ of Latter Day Saints" (Record 575), which was never the name of the defendant church, (Ev. Hill Record 436 and answer of Defts. Rec. 51, 52,) but is the name by which the Original Church was known, an inscription to that effect having been placed on the temple in Kirtland in 1834. (Ev. Wm. B. Smith, Record 137.)

As said by Judge Philips, (Rec. 698):—

There is perhaps not a Mormon on the American continent possessed of any intelligence, who has not known, from his connection with the church, the history of the Temple Lot at Independence. And it would be about as reasonable to suppose that an Israelite could become the purchaser of a lot in Jerusalem and claim that he was an innocent purchaser against the design of his people to reëstablish there the New Jerusalem as to say these respondents are innocent purchasers.

12. NO TITLE HAS BEEN ACQUIRED AS AGAINST COMPLAINANT BY ANY STATUTE OF LIMITATIONS.

(*a*) *The statute has no application to church property.*

Section 6772 (Revised Statutes Mo., 1889) adopted in 1865, (Rev. Stat., 1865, Chap. 191, Sec. 7, p. 746) expressly provides:—

Nothing contained in any statute of limitations shall extend to any lands *given*, granted, sequestered, *or appropriated to any public, pious or charitable use.*

This was but declaratory of the rule existing from time immemorial, for statutes of limitation have never been applied to property impressed with a pious or charitable use. In 2 Story Equity Jur. (13th Ed.), Sec. 1192a, it is said:—

It seems that the statute of limitations . . . will not be allowed to prevail in cases of charitable trusts in the same manner as it would in cases of mere private trusts.

In 2 Perry on Trusts (4th Ed.) Sec. 745, it is said:—

Still less will the statute of limitations apply to a charitable trust, there being no limitation against God nor religion.

Such has always been the doctrine of the courts. (Incorp. Soc.

v. Richards, 1 Con. & Law. 58, 82–84; Atty.Genl.*v.* Beverly, 6 DeG., McN. & G., 256, 269; Atty. Genl. *v.* Christ's Hospital, 3 Mylne & Keene, 344; Dublin's case, 38 N. H., 459, 512.)

Hence, so far as complainant's claim is concerned, no statute of limitations can divest it.

(*b*) *But if a private trust only were being enforced, there would be no bar because there has not been ten years actual, continuous, open and notorious adverse possession.*

The statute of limitation is pleaded, and the rule is that "the proof to sustain an adverse possession must not be inferential, but clear and positive." (1 Am. and Eng. Enc. Law, 305.) It cannot be eked out by inferences and presumptions. (Lynde *v.* Williams 68 Mo. 361, 369, 370.)

The payment of taxes is not of itself sufficient to show adverse possession. (Chapman *v.* Templeton, 53 Mo., 463.) To have acquired a title by adverse possession, the possession must for ten years have been adverse, actual, continuous, open, and notorious, and under claim of title. (Ward *v.* Cochrane, 150 U. S., 597; 2 Washburne on Real Property, 118, 499.) And the state court has repeatedly announced the doctrine. (Bradley *v.* West, 60 Mo., 33; Mylar *v.* Hughes, 60 Mo., 105; Norfeldt *v.* Hutchings, 68 Mo., 597.) And this actual possession must be continuous; it cannot be broken even for a single day. (Oliver V. Holman, 23 Pa. St., 279; Malloy *v.* Burden, 86 N. C., 252.)

Tested by any such rules this record is wholly barren of any proof. We undertake to say that a careful reading of the evidence will fail to disclose anything further than that possession was taken by the Hedrickites in 1882, and prior to that time the lots had been vacant property. All the proof on this subject goes to that extent and no further. (Robt. Weston 205, 285; Wm. McCoy 206, 207; C. St. Clair 207, 208; Ember *v.* Mason 444, 445; Thos. Maxwell 452; Wm. R. Wilson 478, 479; John H. Taylor 480, 481.)

It is not enough that the improvements were made by some one, but it must be shown that they were made "by the party claiming adversely." (Doolittle *v.* Tice, 41 Barb. N. Y. 181.)

Actual possession under color of title must be continuous and not broken for a single day. (Olwine *v.* Holman, 23 Pa. St. 279; Malloy *v.* Burden, 86 N. C. 251.)

The only actual possession, except that of Edward Partridge, was taken by defendants in 1882, as might be inferred from the testimony of Alma Owens, who thinks it was in 1882, but is not certain. (Rec. 456.)

Thomas Hailey testifies positively that the fence was not built and the lot inclosed until September, 1883. (Rec. 207.)

This suit was begun on August 6, 1891. (Rec. 3.)

13. THERE WAS NO LACHES.

The learned Circuit Judge held (Rec. 677, 678) that there was no laches, whereas the Circuit Court of Appeals, treating the case as one where private interests were concerned, ignoring many of the facts, and overlooking the nature of the trust, held (Rec. 688) that laches barred a recovery.

(*a*) *The law where the trust is as to private interests.*

In Lemoine *v.* Dunklin, 51 Fed. Rep., 487, 493, the doctrine is stated to be that where there is an express trust, "the rule undoubtedly is that, so long as nothing is done by the trustee or *cestui que trust* to change their relations, the mere efflux of time will not impair the obligations of the one or the rights of the other."

As to constructive or implied trusts, the rule is, that every case must depend upon its own circumstances. (Boone *v.* Chiles, 10 Peters, 177; Michoud *v.* Girod, 4 How., 503, 560, 561.) It may be well to suggest that delay has frequently been excused when the lapse of time was great as will be seen on examination of the following cases:—

About 40 years: (Buchanan *v.* Upshur, 1 How., 56); more than 20, (Michoud *v.* Girod. 4 How., 503); 36 years, (Bollinger *v.* Choteau, 20 Mo., 89); 58 years, (Proctor *v.* Cowper, 2 Vernon, 376); 36 years, (Obert *v.* Obert, 12 N. J. Eq., 423); 20 years, (Hatch *v.* Hatch 9 Vesey, 292); 10 years, (Wollaston *v.* Tribe, L. R. 9 Eq., 44); 13 years, (Cranmer *v.* McSwords, 24 W. Va., 594, 601); 19 years, (Grosback *v.* Brown, 72 Wis., 458); 25 years, (Gowland *v.* Defaria, 17 Vesey, 20, 25); 7 years, (Martin *v.* Neblitt, 86 Tenn., 383.)

It is unnecessary to multiply instances, for as said in Quinbeck Oil Co. *v.* Marbury, 91 U. S. 587, 591, the lapse of time which will constitute laches "has never been held to be any determined number of days, or years, as applied to every case, like the statute of limitations, but must be decided in each case upon all the elements which affect that question."

Prejudice to the adverse party, changed conditions, fluctuation in value, and loss of evidence are elements which cut the figure in enforcing the rule, and none of these exist in this case. In such circumstances a court of equity hesitates long before enforcing the doctrine. (Wollaston *v.* Tribe, L. R., 9 Eq., 44, 50; Cranmer *v.* McSwords, 24 W. Va., 594, 601; Daggers *v.* VanDyck, 37 N. J. Eq., 130.)

And the enforcement of the doctrine of laches as a rule is no stronger than the exceptions which exist to that rule, for laches is often excusable, and sufficient excuses are found in infancy (12 Am. and Eng. Encl. Law, 552); coverture (Ibid. 553); insanity (Ibid. 554); sickness (Ibid. 558); pendency of suit (Ibid.); negligence of attorney, recognition of right; delay by agreement (Ibid. 559); delay by act of the adverse party (Ibid. 560); negotiation for compromise (Ibid. 561); and confidence fairly reposed in adverse party. (Ibid.)

So absence of a party from a state, may, where involuntary, stand as an excuse. The rule in this regard is fairly expressed in 12 Am. and Eng. Enc. Law, 557, in this language:—

> According to Coke and Littleton, absence from the realm on the King's service, or even absence from the realm, though not in the King's service, was sufficient to excuse the laches of a disseizee in failing to dispossess the disseizor before his death. This rule was based upon the principle that, during his absence, he could not make continual claim, and that by reason of his absence he could have no knowledge of the disseizin. It has, however, been held that a voluntary disability of this nature, of itself, constitutes no excuse for laches. If the owner of lands enters into a contract for the sale thereof to a non-resident, he cannot excuse laches in bringing a suit to enforce a vendor's lien by reason of the purchaser's non-residence. It would appear, however, that under certain circumstances absence from the State may constitute evidence that the plaintiffs were ignorant of the existence of that right of action, and thus operate indirectly to excuse the delay. In some cases, absence from the State, taken in conjunction with infancy and ignorance, has been deemed sufficient to excuse the plaintiff's negligence in enforcing his rights.

In Hallet *v.* Collins, 10 How., 174, absence was considered as an excuse, and was recognized in Duff *v.* Duff, 71 Cal., 513, as a strong element for an excuse.

So where, as in this case, there was an unincorporated religious body, consisting, as the testimony shows, of twenty-five thousand members, the same strictness is not enforced. In such case the rule which should be applied is that which has been stated as to a body of creditors. (12 Am. and Eng. Enc., Law, 570) thus:—

> When an action is brought by or on behalf of a body of creditors, the same laches is not imputed as in the case of an individual, for it is more difficult to hold that a class has, by delay, forfeited its rights than that an individual has done so.

Upon this subject see also *Ex parte* Smith, 1 Dea. and Ch., 267; Boswell *v.* Coaks, L. R. 27 Ch. Div., 424, 457. And since the defendants never asserted laches as a defense by any pleading in the case, thereby inviting complainant to a long, tedious, and expensive litigation (more than 2,000 pages of testimony having been taken),

the court might well pause and consider whether it would not be inequitable to exercise what is simply a discretion upon its part in enforcing the rule, when all the time, expense, and trouble might have been averted by defendants raising the question at the outset.

Where parties are related delay is not so strictly regarded as where the parties are strangers to each other. (12 Am. and Eng. Enc. Law, 569.) Such a doctrine can well be applied to members of a church.

(*b*) *The law where land is held to a pious or charitable use.*

So much as has been said treats this question upon the idea that the rights of these parties are to be treated as if private parties were contesting. But we most earnestly submit that the rules applicable where private interests are at stake have no relation to the case where as here a pious or charitable trust is to be enforced. In such cases a court of equity is always open and always ready, willing, and anxious to vindicate the trust. (3 Amer. and Eng. Enc. Law 123 and cases cited.)

In 2 Story Eq. Jur. (13th Ed.) section 1192 *a* it is said:—

It seems that the Statute of Limitations *and the bar from lapse of time will not be allowed to prevail in cases of charitable trusts in the same manner as it would in cases of mere private trusts.* Thus in the case of a charitable trust where the corporation had purchased with notice of the trust, and held the property under an adverse title *for one hundred and fifty years* it was decided that the corporation should reconvey the property upon the original trusts.

The case thus referred to is Attorney General *v.* Christ's Hospita 3 Mylne *v.* Keen 344, and it fully sustains the text.

In 2 Perry on Trusts (4th Ed.) Sec. 745 it is said:—

Ordinary private trusts are not subject to the statute of limitations like other interests; for so long as the relation of trustee and *cestui que trust* continues, no length of time can bar the rights of the beneficiary as the rights of a creditor may be barred. But where the relation is denied and circumstances have occurred that render it impossible to do equity between the parties, lapse of time may be a bar. *Still less will the statute of limitations apply to a charitable trust, there being no limitation against God and religion,* . . . nor will lapse of time be allowed to establish any perversion or abuse of a charitable trust, if the original purpose be clearly determined.

In Incorpor. Soc. *v.* Richards 1. Conner and Lawson 58, 82-84, Lord Chancellor Sugden said:—

When I consider that previously to the late act, although it was held that the statute of limitations did not refer to equitable rights, yet that by analogy they bound equitable rights; that is, courts of equity considered themselves bound to follow the analogy of the statute and held equitable rights bound by the same rule which bound parties at law; and when I find

that notwithstanding this rule, cases of charity were universally held not to be within the statutes of limitations, I should have expected to have found something explicit on this great and important question in the new act. . . . A hundred cases of charity may arise in which from a defect in the appointment of a trustee there is no person representing the charity; and if there is no trustee to execute the trust who is to make the claim? The objects of the charity cannot make the claim because very often they are not precisely defined; nor is a clearly vested right called into action until some particular act is done by the trustee. It would be found difficult, therefore, to do justice to a charity if the general enactment of the statute of limitations was a bar to it after the lapse of a certain time.

A charity was established when funds were contributed in Atty Gen. *v.* Munson 2 De. G. and Sm. (De Gex. and Smale) 122.

In Atty. Gen. *v.* Beverly 6 De Gex MacNaghten and Gordon 256, 269 it was said:—

The appellants also relied upon the length of time, but if the court clearly sees what the intention of the testator was and that there has been a breach of trust in the nonobservance of that intention, I apprehend that no argument formed on the length of time can prevail.

In the Dublin case 38 N. H. 459, 512, there was a lapse of 35 years, yet the court said:—

No length of time can furnish a legal justification for the abuse of such a trust.

The doctrine so announced is in accord with the policy of the law of the State for section 6772 (Rev. Sts. Mo., 1889) provides:—

Nothing contained in any statute of limitations shall extend to any lands given, granted, sequestered, or appropriated to any public, pious, or charitable use, or to any lands belonging to the State.

This statute was adopted in 1865, (Rev. Sts. 1865, chap. 191, Sec. 7. p. 746,) the intention being to prevent any such thing as lapse of time forfeiting any rights as to such lands.

It may be true that this statute does not relate back so as to cover entries prior to the date of its adoption; still the policy of the state is indicated; and no one would pretend to invoke the doctrine of laches as prior to that date, when it is remembered that the Mormons had been driven from the state and could not have safely returned.

Moreover with a statute saying that time should not be a bar, residents of another state had a right to rely thereon and delay the assertion of their rights.

Slight reflection will show that upon principle laches is no defense to an action to impress a legal title with a pious or charitable use.

Property purchased by or conveyed to a religious body is in every sense a charitable trust and *public in its nature* (3 Amer. and Eng. Enc. Law 130, 131 and cases cited), and public rights are never barred by laches. (12 Ames *v.* Eng. Enc. Law 562 and cases cited.) That the state could file a bill to enforce the trust is clear (2 Story Eq. Jur. 13th Ed. Secs. 1163, 1191), and if it should thus intervene it must be conceded that laches would be no bar. (12 Amer. and Eng. Enc. Law 562 and cases cited.) With these principles in view it should be remembered that the Defendants fail to plead laches as a defense, and even while it can be invoked where individual rights are concerned, it is for the court *in its discretion* to apply the doctrine. Now if in fact the trust is for the public, and the public is never barred, why should the court, where the parties waive the right, assert the doctrine as a defense? The courts always lean with favor towards such trusts. It has been said "that the king as *parens patriæ* has a right to guard and enforce all charities of a public nature by virtue of his general superintending power over the public interests" (2 Story Eq. Jur. Sec. 1190); and so where such a trust was created without a trustee, it was deemed "a personal trust devolved upon the king to be administered through the Lord Chancellor as the keeper of his conscience." (Ibid.) The construction of the instrument creating such a trust is to be liberal (Ibid. Sec. 1139), or as said (Ibid. Sec. 1165) by an eminent author:—

> Charities are also so highly favored in the law that they have always received a more liberal construction than the law will allow in gifts to individuals.

And so if such a trust be created and cannot be carried out, a court will apply it to other public purposes, as nearly as possible like that to which it was directed (Ibid. Secs. 1167-1169). If it be so given that there can be no objects, the court will invent a new scheme to execute it, or if the specified objects cease to exist, the court will remodel the charity (Ibid. 1170 *a*). If there be defects in the conveyance, the court simply inquires as to whether the donor had capacity and a disposable estate, and then proceeds to cure the defects (Ibid. 1171). The court was, at least formerly, "most astute" to find grounds to sustain charitable bequests (Ibid. 1172), refusing to apply a statutory prohibition against conveyances of land to corporations (Ibid. 1173); and so we might continue; but it will suffice to refer to the books (Ibid. 1174-1192), though we may add that it was the practice in England by way of encouragement to reward, by giving part of the fund to persons who would give such information as would enable a charitable trust to be established (Ibid. Sec. 1192). The result is that a court of chancery in establishing such a trust,

acts for the public, and looks with favor and liberality upon the proceeding, so that there is great reason in saying that such laches as would bar private rights has no such effect where there is involved the question of establishing a charitable trust.

(c) *Whatever the character of the trust, the facts do not warrant a finding of laches.*

Having thus adverted to some of the rules which govern this subject, as well as the exceptions thereto, we turn to the record in order to clearly appreciate the case in hand. Judge Philips in his opinion (Record 667, 668,) said upon this subject:—

It is urged by respondents that the claim of complainant is stale, and that a court of equity will not afford relief where party complaining has been guilty of laches. There are several answers to this objection. In the first place, this is an express trust in favor of complainant, arising on the Partridge deed of 1839. The statute of limitation does not run against an express trust. There was no repudiation of the trust by the trustees. Laches is a question determined by the circumstances of the particular case.

The delay in bringing this action is not inexcusable. The beneficiaries of the trust were driven from the State in 1838–9 by military force, and were not permitted to return to the State. A public hostile feeling and sentiment were excited against them, which would have blazed up from the slumbering fires at any time thereafter prior to the Civil War, had they returned here and attempted to occupy this property. No one better knew this than the respondents when they laid hands to this property. The complainants were not here "to stand by" while parties were giving and receiving deeds to this property. No improvements were made on, and no visible possession taken of, the Temple Lot, until 1882, within ten years of the institution of this suit, and when the trust deed had been of record twelve years. Up to this hostile action of respondents the complainant had a right to assume that the trust character of this property was intact, and that the lot was open for their entry at any time when the auspicious hour came to build on it.

In the language of Chief Justice Fuller in Simmons Creek Coal Company *v.* Doran, 142 U. S. 444, "There was no delay, therefore, in the assertion of its rights after they were invaded." See also Burke *v.* Bachus (Minn.), 53 N. W. Rep. 458.

What then are the facts? In December, 1832, Bishop Partridge of the original church acquired the property with church funds (Supra Div.). In 1839 he declared the trust in a solemn, written instrument (Supra Div.). In 1841 he died (Evidence Emily D. P. Young, Rec. 209). In 1848 one Pool, bought with notice (Supra Div.). The Utah Church took the church record and papers and kept and concealed them from complainant's church (Ev. Whitehead, Rec. 62, 63, 67, 68; Blair 165; Woodruff 323). That church is a be-

liever in the sacred dedication of the property (Ev. Woodruff 329), and is and has been behind the defense in this case. From 1867 Eaton, a Hedrickite, and former member of the original church, and one Hedrick, presumptively related to Granville Hedrick, commenced to buy up the apparently outstanding legal titles (Deeds, Rec. 570, 571). In 1870 the declaration of trust by Edward Partridge went upon the record (Rec. 277). Its existence was studiously concealed from complainant's church and the document was never in its possession (Ev. E. L. Kelley 273). Hill, the present head of the Hedrickites, says he came to Missouri *solely* because of the revelation as to this lot (Rec. 476), and yet the date of his arrival was 1868 (Rec. 460), about the time the titles were being bought. The declaration of trust went on the record in mystery, and after being recorded as mysteriously disappeared. If there is a body authorized to deal with inferences, it is a court of equity which sits to sift the consciences of men, and the only fair inference to be drawn is that the Partridge deed was and is in the possession of the Utah Church, the defendant's active ally, and it was used with the consent of the Hedrickites to fortify and add to the titles they were seeking to acquire at the time of its recording.

The name of defendant's organization is "*Church of Christ*" (Ev. Owens 457; Answer Rec. 21, 23, 24). When Granville Hedrick took the trust it was for the Church of Christ of Latter Day Saints (Rec. 570). This was the name of the Original Church as inscribed over the door of the Temple at Kirtland, Ohio (Ev. W. B. Smith 137). Hill in his testimony claims that he holds for that Original Church (Ev. 468). The result is that the *trust* is admitted, and has never been repudiated; but the controversy is as to the true succession. In 1887 the deed to Blakeslee was executed and went upon record (Rec. 275), and in the same year a formal notice was served upon Hill (Rec. 277, 278). Another circumstance is that Blakeslee, after acquiring title from Johnson and his wife, died in 1890 (Ev. E. L. Kelley 277). In a short time after giving this formal notice to Hill to turn over the property, the complainant's church learned that the defendants were contemplating mortgaging the property (Ev. C. E. Reynolds, Rec. 512; and letter to C. A. Hall, dated Aug. 11, 1890, 514); and filed the original bill in this case August 6, 1891 (Rec. 3).

The members of the church were expelled from Jackson county by mob violence (Ev. Brackenbury 263, 264; Weston 281–283; Dr. H. Rathbun, Sr. 248–251–259, 260; Martha Hall 310; Jacob Gregg 319–321; W. Woodruff 325, 326; William R. Wilson 478, 479); and driven from the state (Weston 284; Rathbun 251, 253, 261, 263; Chas. R.

Ross 296-300; Mary Eaton 300-302; W. Woodruff 326; Mercy R. Thompson 375; Joseph B. Noble 398), under a threat of extermination by authorities of the state if they refused to leave the state, or should they ever return (Address of Gen. Clark, Rec. 316); and the testimony shows that up to and for a period long after the war it would not have been safe for any Mormon to have come to Jackson county. (Robert Weston 283, 284; John H. Thomas 285, 288, 289; Col. John T. Crisp 307-310; Martha A. Hall 311; Jacob Gregg 320, 321; William Stewart 322; Joseph D. Noble 398.)

And when the facts already recited are remembered; i. e., they were expelled because of their antislavery views, it is reasonably certain that until long after the war they could not have safely returned.

Besides this, it is practically without any dispute that the lots were vacant and unoccupied until 1882 (Robert Weston 205-285; William McCoy 206, 207; C. St. Clair 207, 208; E. Mason 444, 445; Thomas Maxwell 452; William R. Wilson 478, 479; John H. Taylor 480, 481); and yet it was a notorious fact that the lots were held for the Original Church and that no valuable improvements have ever been made thereon. (Ev. Hill 468.)

Where one purchases with notice of an outstanding equity, he is in no position to assert the defense (Connetc. Ins. Co. *v.* Eldridge 102 W. S. 545). Here Pool purchased with notice, and Hedrick, trustee for the defendants, was a member of the Original Church, and Hill claims to hold for this. When there is an express trust as in this case, the general rule is, that the doctrine of laches has no application until the trustee absolutely repudiates with the knowledge of the beneficiary (Prevost *v.* Gratz 6 Wheat, 481; Oliver *v.* Pratt 3 How. 333; Badgee *v.* Bagee, 2 Wal 87; Philippi *v.* Philippi, 115 W. S. 151). In Mechoud *v.* Guod 4 How. 500, 571, speaking of constructive trusts, it was said, "In general, length of time is no bar to a trust clearly proven to have existed. . . ." Here there is no repudiation of the trust, because Hill, the trustee, expressly declares that he still holds the property for the church. (Rec. 468, 476, 477, 478.)

This was a judicial admission, and being made by a party as a witness was as binding as if made by the pleadings. (State *v.* Brooks, 99 Mo. 137.)

There is no pretense that complainant ever knew of the Cowdery deed prior to 1886. In June, 1887, the heirs of the Cowdery infants conveyed to the trustee of complainant (Rec. 275). Then for the first time a direct claim for the title existed, and in the same year a written demand for the property was made. (Rec. 277, 278.)

In 1890 Blakeslee died (Rec. 277) and on August 6, 1891, this suit was instituted. (Rec. 3.)

14. THERE WAS NO ADEQUATE REMEDY AT LAW.

The learned trial judge held that equity had jurisdiction (Rec. 678) but the Court of appeals, entirely misapprehending the nature of the controversy, decided to the contrary. (Rec. 697.) The slightest reflection will show the error which misled that court.

Prior to December 19, 1832, Edward Partridge, Bishop of the Original and then undivided Church of Latter Day Saints, came to Jackson County, Missouri, and with church funds contributed by the members for that purpose purchased the property in controversy (Supra Div. 11), but he took the legal title in his individual name. (See Deed, Rec. 266.) Accordingly appellee, claiming to be the successor of such church, filed a bill in equity (Rec. 5–11) asking a decree decreeing the land *to be held in trust for appellee*, which bill was *subsequently amended* (Rec. 25) so as to aver that appellee instead *of holding the legal title was the equitable owner thereof*, but the fact of the amendment as well as the prayer for a decree declaring appellants' title to be in trust seems to have escaped the attention of the Court of Appeals.

Partridge on March 25, 1839, executed a paper (Rec. 274) attempting to convey the property to the Cowdery children, but the instrument was not recorded until 1870. This instrument was either a conveyance in or declaration of trust so ambiguous as to admit of oral explanation, and so far as this case is concerned, it is sufficient to say that it may be considered and treated as evidence only tending to prove the trust by the declaration thereof. The heirs of Cowdery in 1887 quitclaimed any interest they might have had to Blakeslee, then Bishop of appellee's unincorporated church, the deed being in trust. Blakeslee died and the church was left without a living trustee, and it was incorporated in 1891, so that upon its incorporation it became at least in equity entitled to succeed to all the rights of the unincorporated body. (Schmidt *v.* Hess, 60 Mo., 591; Keith *v.* Bingham, 97 Mo., 196; Lilly *v.* Tobien, 103 Mo., 477; Miller *v.* Chittenden, 4 Ia., 252; Church *v.* Adams, 4 Ohio, 76; Church *v.* Veder, 4 Wend. 494; Church *v.* Witherell, 3 Paige, 298; 20 Am. & Eng. Encl. Law, 804.) It had no deed, but had the right, being the real beneficiary without a living trustee, to proceed in equity to have the trust declared for its benefit and for a new trustee. (Tiedeman Real Property, Sec. 509.) In which case the court could have declared the trust and executed it by its own officers. (Balesville Inst. *v.* Kauffman, 18 Wal. 151.)

Prior to filing for record the conveyance to the Cowdery children, and after the death of Partridge, and in 1848, three of the five Partridge heirs made a quitclaim deed (Rec. 547) to one Pool, and the title thus conveyed by sundry mesne conveyances passed to one Granville Hedrick (Deeds, Rec. 569, 570) "as trustee for the Church of Latter Day Saints," which was the name of the Original Church (Rec. 137) *and is not the name of appellants' church.* (Ans. Rec. 51, 52, Ev. Hill, 137.) Hedrick dying, Hill was substituted as trustee, and in his testimony he distinctly stated that he held the property in trust for the *Original* Church. (Rec. 468.) The testimony showed that he was diverting the property from its proper use by using it for a church teaching a different doctrine. Neither Pool nor anyone under him ever occupied the position of an innocent purchaser for value. (Supra Div.)

The case was decided on the circuit, and argued on appeal by complainant upon the theory that technically the *legal* title was not in it but that the land was originally acquired in trust and passed into the hands and possession of others charged with knowledge of the trust. And the allegations in the bill in reference to the title being in complainant and not in defendants can be eliminated and there is enough left to present the theory suggested. Besides this, by amendment, complainant's title was claimed to be equitable only. (Rec. 25.)

This is not the case suggested by the Court of Appeals of an unquestioned common source of title with the legal and equitable ownership combined and different purchasers claiming thereunder so that the title can be settled at law, but the case is one where the common source of title held the property in trust for the church represented by complainant, and the title acquired by defendants, if any, was acquired subject to and with knowledge of the trust, so that if complainant *had no legal title*, it was entitled to a consideration of the claim that the alleged legal title held by defendants was in trust for its church.

A settlement of the question of legal title would not determine upon what trust the property was held, for if the legal title be conceded to be in Hill as trustee, still the benefit of the trust must enure to complainant, (*a*) if, as Hill says, he holds for the Original Church and the proofs warrant the finding that complainant is the true successor thereof; or (*b*) if the legal title was acquired from Partridge who held it in trust and there was no innocent purchaser under him for then a resulting trust existed. Or, if the bill be treated as proceeding for a legal title once vested in Blakeslee trustee, it is good because of the fact of the subsequent incorporation of the church which entitled it to the benefit of the trust and to have it made

matter of record. It was also entitled to a new trustee. To such an action defendants were proper parties because claiming the legal title and in possession. It is true that Blakeslee's heirs or successor could have been made defendants and if necessary they will at any time, even here, appear and disclaim. Suffice it, no objection was made of want of necessary parties. Indeed, no objection was made by the pleadings that the remedy was at law.

The decision by the Court of Appeals proceeds upon the idea that Partridge had the legal and equitable title, and that defendants obtained a title from him upon one trust, whereas complainant obtained another title based upon another trust, so that a court of law can determine the legal title, and when so determined the fact is ascertained as to the trust with which the property is charged, whereas Partridge in fact only held the property in trust for complainant, and, if a legal title passed to defendants, that title is impressed with the use, or if the legal title passed to Blakeslee, he having died and complainant having been incorporated, the latter is entitled to have a new trustee and the use impressed upon the legal title thus in existence. In this view of the case Fussill *v.* Gregg, 113 U. S. 550, 554, involving no trust, has no bearing on the case, and this case is as distinguishable as was Root *v.* Woolworth, 150 U. S., 401, 410, because equitable cognizance will be taken for other reasons. It is therefore submitted.

(*a*). If this were an action between private parties with private interests, still if Partridge acquired the property with the funds of the church a resulting trust exists which will be declared by a court of equity as against Partridge and all persons claiming under him excepting innocent purchasers for value. This is common learning. 2 Story's Eq. Jur., Secs. 1201, 1219, 1256, 1257, 1260; 2 Pomeroy Eq. Jur. Secs. 1030, 1031, 1058; Moore *v* Crawford, 130 U. S., 122, 128; Oliver *v* Piatt, 3 How., 333, 401.

(*b*) Whenever there is an attempt to impress property with a trust equity will entertain jurisdiction even if an action at law might also be maintained. (Union Stock Yards Co. *v* Gillispie, 137 U. S. 411, 420; Finlay *v* King, 3 Pet., 346; Barclay *v* Howell, 6 Pet. 498.)

(*c*) In an action of ejectment the court will not determine any question of trust, nor to what use the property is held, as these are questions alone determinable in a court of chancery. This doctrine has been distinctly affirmed. (Finlay *v* King, 3 Pet. 346, 383; Lorg *v* Palmer, 118 U. S. 321, 343, 344.)

(*d*) But independently of these considerations the trust was to charitable and pious use (3 Am. & Eng. Encl. Law, 130, 131) and wherever a charitable trust exists and is being diverted a court of

equity will always interpose and afford relief, and a court of law has no jurisdiction, such a trust not being recognized at law (3 Am. & Eng. Encl. Law, 123, 124; 2 Story Eq. Jur., 13th Ed., Secs. 1136, 1154c, 1167, 1170, 1184, 1190; Society etc. *v* New Haven, 8 Wheat., 464; Vidal *v* Girard, 2 How., 127; Ould *v* Washington Hospital, 95 U. S., 303; Kain *v* Gibbony, 101 U. S., 362; Jones *v* Habersham 107 U. S. 174.) Upon this ground alone complainant had the right to invoke the interposition of a court of equity. The very fact that the property, wherever the title be, is in reality held for the benefit of complainants church, gives a court of equity jurisdiction, which once given is retained although legal questions may thereafter arise.

(*e*) And that this character of trust is enforceable only in equity is clearly settled. (Watson *v* Jones, 13 Wal., 679; Schmidt *v* Hess, 60 Mo., 591.) In no other forum could the question be decided as to which church was the true successor of the Original Church.

15. BUT IN ANY EVENT THERE SHOULD HAVE BEEN NO ORDER TO DISMISS THE CASE.

There was manifest impropriety in remanding the case with direction to dismiss upon any such ground as that there was a remedy at law. No such objection was raised below and was therefore waived. (Hollins *v* Brierfield Coal & Iron Co., 150 U. S., 371, 380, 381; Reynes *v* Dumont 130 U. S. 354–395; Kilbourn *v* Sutherland 130 U. S. 505, 514.) But if it should be said that the court has the inherent power to raise the question for itself, it would be a manifest act of injustice to dismiss the case for faulty pleading, when on the facts an equitable cause may be presented and where the successful party refrained from making the objection at the outset. In such case the sense of justice suggests that complainant be given leave to amend and the cause at most should be remanded for that purpose. And such is the settled rule and policy of this court. (Wiggins Ferry Co. *v* Ohio etc. R. R. Co., 142 U. S., 396, 413–415.) The amendment can even be made here. (Nat. Water Works Co. *v* Kansas City, 62 Fed. Rep., 853, 863.) And upon the facts, if not properly stated in the bill, an amended bill can be framed charging the legal title held by appellants to be in trust for appellee. Or a new bill can be framed charging both titles to be in trust and bringing in the heirs and successor of Blakeslee as parties.

If the court will look at the facts it will be readily seen that there is a case for an equitable consideration of the merits.

The foregoing argument, as well as the petition for the writ was prepared prior to the filing of the opinion upon rehearing in the Circuit Court of Appeals, and hence no reference was made thereto.

FRANK HAGERMAN,
P. P. KELLEY, AND
SMITH McPHERSON,
Attorneys for Appellee and Petitioner.

Office Supreme Court, U. S.
FILED
JAN 16 1896
JAMES H. MCKENNEY
CLERK.

NO. 819

IN THE

Supreme Court of the United States.

THE CHURCH OF CHRIST AT INDEPENDENCE, MO., *et al*,
Appellants,
vs.
THE REORGANIZED CHURCH OF JESUS CHRIST OF LATTER DAY SAINTS,
Appellee.

Statement and Brief for Appellants in Opposition to the Petition for Certiorari.

C. O. TICHENOR,
Attorney of Appellants.

The Law & Credit Co. Print.

IN THE

Supreme Court of the United States.

THE CHURCH OF CHRIST AT INDEPENDENCE, MO., *et al*,
Appellants,
vs.
THE REORGANIZED CHURCH OF JESUS CHRIST OF LATTER DAY SAINTS,
Appellee.

Statement and Brief of Appellants.*

APPELLANT'S STATEMENT.

I.

THE COMPLAINANT.

Complainant sues as an Iowa corporation; it describes itself as "a corporation organized under and pursuant to the laws of the State of Iowa and having its principal place of business at the Town of Lamoni, Decatur Co., Iowa, and citizen of said State of Iowa" (p. 4). The complainant is simply the incorporation of the congregation at Lamoni, Iowa. The articles of Association signed and acknowledged at that place June 6, 1891, (p. 56). The bishop says (pp. 54, 55): "The association at Lamoni, Iowa, adopted articles, as set forth in the

*NOTE.--The statement and brief are the same as filed in the Circuit Court of Appeals, with the last three sections added.

original to which I have already testified. * * * I mean by association the church; by the church I mean the church located at Lamoni, Iowa, as set forth in the articles of incorporation. * * * All the members of the church at Lamoni participated in the incorporation by vote but not by signature. If I knew just the membership there I could tell how many participated by vote, but I cannot do so because I do not know the membership. In round numbers the membership is about 750 or 800. The church at Lamoni effected the articles of incorporation because that is the central church and all others are simply branches of that church: that is the way we understand it. * * * The church at Lamoni is not, so far as time is concerned, the older organized church; there are branches of the church that have an older organization than the present headquarters of the church, so far as time is concerned."

The articles of Association begin as follows (p. 56): "Articles of Association made pursuant to a resolution passed at the annual conference of the Reorganized Church of Jesus Christ of Latter Day Saints on Friday, April 10, 1891, providing—

That a committee of three be appointed to prepare articles of incorporation in harmony and in conformity with the present incorporation under the laws of the State of Illinois, the same to be used to further incorporate the society in the State of Iowa and other states by vote of any large branch or stake in such state or states as provided by the laws of the same. (See also p. 197).

These said articles having been adopted by the Reorganized Church of Jesus Christ of Latter Day Saints at a general meeting of the members of said church, held at Lamoni, County of Decatur, in the State of Iowa on the sixth day of June, 1891.

Article 1, &c.

Bishop Kelly says (p. 55) "The resolution authorizing the incorporation of the church in general, and any branch of the church in any state where such corporation is permitted might act in harmony with the resolution and incorporate."

Stebbins, secretary, says (p. 197) he was present at the conference of the church at Kirtland, Ohio, in April, 1891; that the records of the conference on the subject of the re-incorporation of the church read as follows : "The subject of the re-incorporation of the church was taken up and the following was moved and adopted: That a committee of three be appointed to prepare articles of incorporation in harmony and in conformity with the present incorporation under the laws of the State of Illinois, the same to be used to further incorporate the society in the State of Iowa and other States by vote of any large branch or stake in such states as provided by the laws of the same."

From respondent's evidence it appears (p. 165) that "the number of different churches or branches of the church existing in the United States is about 400, besides about 150 that are more or less in a disorganized condition* * but about 400 are now existing as organized bodies with officers and holding regular sessions or meetings. Approximately I know about the membership in the United States. It is from 22,000 to 25,000."

In two months after complainant's articles were signed this suit was brought, and it is evident that a purpose of its incorporation was to bring this suit. Its articles attempt to create evidence and to remove obstructions which the projectors of this suit saw in the way of their purpose to capture lands held by others in the various states of the Union, and hence we find the following in articles (pp. 56, 57, 58, 59): "The Reorganized Church at Lamoni, Iowa, shall be the principal or central church * * * all others shall be stakes or branches * * * subordinate

to this organization and forming constituent parts of the same * * * This corporation may purchase and hold or receive donations, or in any legal way procure, receive and hold the title of any real or personal property for the use of said church, its stakes and branches, the title of all which, whether procured by the general church or any stake or branch shall be taken to the corporation and in the corporate name of said Reorganized Church, and said corporation shall hold the same for the use of the church its stakes and branches, and said corporation may sell and convey the same or any part thereof, applying the proceeds to the use aforesaid.* * Said corporation may sue and be sued; defend and be defended in all courts and places, but all shall be done in the corporate name. All property now held or owned by said church, in the name of any person or persons as trustees or otherwise, * * * shall vest in said corporation. All persons holding such property in trust for said church are hereby directed and required to transfer and convey the same to said corporation, as the property of said church. And said corporation shall, by operations of law, succeed to all property now owned by said church or held for its use, and may sue and recover the same in the name of the corporation. * * * This organization reserves to itself all the rights, powers, privileges and exemptions conferred by Chap. 2, Title, Nine of the Code of Iowa, providing for the incorporation of church or religious societies."

The amended bill (p. 5) alleges that this religious corporation, which brings this suit, incorporated in Iowa in 1891, is an Illinois corporation incorporated in 1872. "And thereupon your orator complains and says that it was incorporated under the laws of the State of Illinois on the — day of October, 1872, and afterwards on the — day of June, 1891, it was duly incorporated under the laws of the State of Iowa."

Complainant introduced the Articles of Association of said Illinois corporation (p. 317). These arti-

cles make it the principal church, and they contain the provisions as to real estate as above quoted.

The bill goes still farther (p. 8), "And your orator further shows that the said Church of Jesus Christ of Latter Day Saints was first regularly organized in the State of New York, in the year 1830, which organization was soon thereafter, namely, in January, 1831, removed to the said town of Kirtland, in the State of Ohio, and afterwards, namely, during the year 1832, a branch of said church was established at Independence, Mo., another soon after at Far West, Mo., and another at Nauvoo, Illinois. * * * And it was while your orator first established its church at Independence, Mo., that it became the owner of and possessor of the property in controversy, viz.: in 1832."

"And your orator (p. 9) further shows that your orator is the same church association, teaching the same teachings, tenets and beliefs as to all spiritual matters as did the church association by the name of the Church of Jesus Christ of Latter Day Saints while at Nauvoo, in the State of Illinois, and is the same church in fact and the same association in fact, excepting that it has since been incorporated, as hereinbefore in this bill alleged, and by which re-organization and the incorporation thereof, has taken unto itself the name of your orator, The Reorganized Church of Jesus Christ of Latter Day Saints, by reason of which it has at all times since the year 1832 been the owner of all the real estate in controversy in this action.

No deed or contract, verbal or in writing, was ever made by anyone with respondent, or with the Illinois corporation, or with any one of the 400 organizations, as for that matter, in reference to the land sued for. In other words, this corporation is connected with this land in no way, shape or form, unless the recitals of this Lamoni congregation in their articles of association have had this effect (p. 271).

The decree reads (p. 29), "It is ordered, adjudged and decreed as follows: That the Reorganized Church of Jesus Christ of Latter Day Saints, the complainant herein, is a corporation duly and regularly organized under the laws of the State of Iowa, and as such includes in its corporate capacity the whole of the membership thereof, wherever found, and that the complainant has the right to maintain this action in its corporation capacity.

There is a branch of the Mormon Church at Independence, Mo., whose congregation believes the same as the congregation at Lamoni, who incorporated complainant, and "it is admitted (p. 483) that the plaintiff holds the title to the property upon which the stone church in the city of Independence, Missouri, is located, and that it has a seating capacity of one thousand persons." This church is directly opposite the ground sued for (p. 444).

Real estate necessary for the purposes of the branch of the Mormon Church to which respondent belongs seems, by the evidence of Bishop Kelly, to be held in various ways (p. 269): "The property of the local branches of the church in Canada is held in part by the local trustees, and my instruction has been to the officers there in deeding property, to have it deeded directly to the church, in its corporate name, as we claim we could and can so hold it by the recognized laws of comity between the two countries in its corporate name."

The term the Reorganized Church of Jesus Christ of Latter Day Saints is used by respondent's witnesses as one would say the Baptist Church or Methodist Church, meaning the sect by that name; and this general name seems to be used by them as synonymous with this little church at Lamoni.

He says he knows the real estate at Independence is not in his name; it may be in name of Bishop Blakeslee. "The titles to a number of the local churches run to Israel L. Rogers as the trustee and Bishop, when he was Bishop of the church. That

was before the society was ever incorporated, and after the appointment of Bishop Blakeslee some of the deeds run to him as Bishop and trustee, and some were directed to the church by its corporate name, and so it has been since my appintment. * * * It is held for the use and benefit of the society, so long as the society holds together. I mean by that, the local society, and so long as it is in harmony with the laws of the church. If it should happen that the local society for any reason should depart from the church, the general society would not lose its interest in the property."

II.

THE TITLE TO THE LAND IN CONTROVERSY.

A decree was rendered in favor of respondent for lots 15, 16, 17, 18, 19, 20, 21 and 22, all in Woodson & Maxwell's Addition to the said town, now city of Independence (p. 29). Up to the trial respondent claimed (p. 5) to be "the owner in fee simple by title absolute." At the trial, by a supplemental bill (p. 27), the words "in fee simple by title absolute" were stricken out, and the word "equitable" was inserted before "owner," also lot 22 was inserted.

(a) Allegations of the Amended Bill.

The amended bill alleges that (p. 5):

1. Edward Partridge became the owner in fee of the lots sued for Dec. 19, 1832, he taking "the title thereof in trust;" that complainant and defendants claim through him.

2. On or about the 28th day of March, 1839, Partridge did convey said property to Jane, Joseph and John Cowdry, children of Oliver Cowdry, in trust for the Church of Latter Day Saints, formerly of Kirtland, Ohio. "Each and all died before attaining their majority, dying intestate," without conveying said real estate.

3. On or about May 27, 1886, the widow of Oliver Cowdry did convey said land to her daughter, Marie, the only living heir of said Oliver, "which said deed of conveyance vested in her all the title in and to the property in controversy, in so far as she * * * could * * * vest said title.

4. On the 9th day of June, 1887, the said Marie "did execute and deliver a deed of conveyance, thereby conveying the property now in controversy, and the whole thereof, to one George A. Blakeslee, Bishop and trustee in trust of the Reorganized Church of Jesus Christ of Latter Day Saints, your orator herein;

which said conveyance was made to the said Blakeslee, trustee, in trust for the use and benefit of the said church, your orator, according to the laws and usages of the same, at which time the said Blakeslee, as Bishop to your orator, held the legal title to all real estate belonging to your orator"; that said Blakeslee died "on the — day of ——, 1890.

5. The said Partridge soon after dying, his widow, Lydia, and his three children, Eliza, Emily and Caroline, did, May 5, 1848, execute and deliver a pretended quitclaim deed and that only, of said premises, to one James Pool, purporting to convey said premises in controversy to him, the said Pool."

6. "On August 3, 1848, the said Pool, by a pretended deed of conveyance, did pretend to deed the premises in controversy to one John Maxwell."

7. On "September 22, 1848, the sheriff of Jackson County, Missouri, on executions in certain judgments against him, the said James Pool, did pretend to sell said real estate to him, the said John Maxwell.

8. "And the said Maxwell dying, his heirs did afterwards, to-wit, March 23, 1867, by what purported to be a deed, deed said premises now in controversy to one Joseph C. Irwin.

9. "And afterwards, the said Irwin did, by a pretended conveyance, purport to convey the said premises to one Eaton."

10. "And afterwards the said Eaton conveyed said premises in trust to one Granville Hedrick, for the use and in trust for the Church of Latter Day Saints, which church in truth and in fact, although the name is different, is that of your orator."

11. "And afterwards, the said Granville Hedrick dying, in an ex parte proceeding in the Circuit Court of Jackson County, Missouri, did, in September, 1890, appoint defendant, Richard Hill, trustee to execute the trust imposed upon him, the said Hedrick."

(b) The testimony discloses:

1. The deed of Partridge to the children of Cowdry (p. 242), although acknowledged March 25, 1839, was not filed for record until February 7, 1870. This deed recites that the grantor received from the grantees $1,000 as a consideration for the deed. It was acknowledged before one of the justices of the County Court of Caldwell County, Missouri. It concludes as follows: "In testimony whereof I have hereunto set my hand and affixed my private seal, on the day and year above written.

"Elias Higbee, J. C. C. C."

A certified copy of the deed was read. Bishop Kelly says (p. 273), speaking of this deed, "I never saw the original deed; I never knew of anyone who had it in their possession; never knew anyone who claimed to have it in their possession; it was never in possession of the Reorganized Church of Jesus Christ of Latter Day Saints to my knowledge. Yes, sir, I have made diligent search to ascertain these facts. I do not know a thing in the world about its whereabouts or whose possession it is in." Again, "I had the recorder of Jackson County examine his office for the original as early as 1877, and he stated to me that he could not find it; nor did the records show who took the deed from his office—that is, the original deed from his office."

The deed also recites that money was put in the hands of the grantor by Cowdry, for the purpose of entering lands in Missouri in the name of and for the benefit of the Church of Latter Day Saints. He recites that he did with these funds enter lands in Jackson County, Missouri, in his own name. This deed does not describe any tract of land. The language of the deed as to this is as follows: "I * * * do give, grant, bargain and sell * * * all the lands entered in my name in the County of Jackson, in the District of Lexington, in the State of Mis-

souri, * * * The first party and signer of this deed does also sell, alien and confirm * * * all real estate and lands he has both entered as aforesaid, and all he owns in his own name by private purchase and holds by deed of gift, being intended for the use of the Church of Latter Day Saints or otherwise."

2. The deed by which Edward Partridge got title to lands sued for (p. 266) was an ordinary warranty deed for a tract of land of some 63 acres. There is nothing to indicate in the deed that Partridge took it in trust.

This tract of land now claimed to be trust property, includes Woodson & Maxwell's Addition, Pendleton & Gentry's Subdivision, Prospect Place, St. John's Subdivision, Torpy & Surface Subdivision, St. John & Dawson's Addition, all in the City of Independence, Missouri; also a part not platted (See plat pp. 618 and 619).

This deed was acknowledged before Russell Hicks, "Deputy for Samuel C. Owens, Clerk C. C. J. C."

The certificate of acknowledgment concludes as follows: "Taken and certified under my hand and the private seal of Samuel C. Owens, clerk of said Circuit Court, there being no official seal at said office, the day and year above written."

It was recorded May 24, 1832.

The deed (p. 278) by the widow of Cowdry to her daughter, Marie, is a quitclaim in common form, indicating no trust, reciting that it was made "in consideration of the sum of natural love and affection for my daughter, and the sum of one dollar, to me paid by the said party of the second part, the receipt whereof is hereby acknowledged."

It bears date May 29, 1886, and was recorded April 21, 1892.

The deed of this daughter to Blakeslee (p. 275) recites a consideration of one hundred dollars paid, and the money was actually paid her (p. 227); is dated

June 9, 1887, and was recorded June 10, 1887. The grantee is described as follows: "And George A. Blakeslee, Bishop and trustee in trust of the Reorganized Church of Jesus Christ of Latter Day Saints, of the County of Berrien and State of Michigan, party of the second part."

The deed (p. 546) by Lydia, Elizabeth M., Emily D. and Caroline E. Partridge to James Pool, is dated May 5, 1848, and was recorded June 16, 1848. It recites a consideration of $300. It was acknowledged before the clerk of the Circuit Court of Atchison County, Missouri. The acknowledgment concludes as follows: "In testimony whereof I have hereunto set my hand and affixed my private seal (there being no seal of court provided), at office the day and year last aforesaid." It was admitted "by the plaintiff (p. 546) that the original is not within the possession or control or within the reach of defendants or any of them."

The court excludes this deed (p. 691, p. 30), because the clerk "certified the acknowledgment under his private seal, there being no seal of the court provided."

3. The deed from James Pool to John Maxwell (p. 547), dated and recorded August 3, 1848, recites a consideration of $600.

4. This land was sold under a judgment against James Pool to John Maxwell for $1,315. The sheriff's deed is dated April 18, 1849, and was recorded the same date. The judgment, execution and deed appear at pp. 550, 551, 552 and 553.

5. A deed (p. 554) from L. J. Edwards to S. H. Woodson for 63.43 acres, reciting a consideration of $100, dated August 10, 1842, and recorded March 1, 1847. The plat (p. 555) of this land as an addition to Independence, executed by S. H. Woodson and John Maxwell as proprietors, dated March 31, 1851, and recorded same day.

6. A decree (p. 556) in partition in suit of S. H. Woodson against R. G. Smart and the heirs of John

Maxwell, rendered at the March Term, 1859, of the Circuit Court of Jackson County, Missouri. Sales were made under said decree at the September Term, 1859, of said court, as shown by the following deeds, which were acknowledged in open court:

(a.) By sheriff to heirs of John Kelly, decd., lot 16, for $116. Deed dated 19th September, 1867; recorded September 20, 1867 (p. 562).

(b.) Sheriff to John Montgomery, lots 9 and 20, for $106. Deed dated September 9, 1867; recorded September 30, 1867 (p. 564).

(c.) Sheriff to Joseph C. Irwin, lots 17, 18, 19 and 22 (and other lots), for $1,077.37. Deed dated March 23, 1867; recorded December 8, 1870 (p. 566).

(d.) Sheriff to Thomas M. Swope, lots 21 and 23 (and other lots), for $290.25. Deed dated March 14, 1867; recorded May 14, 1867 (p. 568).

(e.) The records of the Circuit Court show that the sheriff executed a deed for lot 15 to S. H. Woodson (p. 558).

7. A warranty deed (p. 570) from T. H. Swope to Jacob Tindall for lot 21, dated May 13, 1866; recorded June 4, 1866; consideration, $250.

8. A warranty deed (p. 570) from said Tindall to John H. Hedrick for lot 21, dated August 22, 1867; recorded September 24, 1867; consideration, $250.

9. A warranty deed (p. 571) from J. C. Irwin to Wm. Eaton for lots 17, 18, 19 and 22, dated July 9, 1873; recorded July 11, 1873; consideration, $525.

10. A warranty deed (p. 571) from S. H. Woodson to A. and S. Kean for lot 15, dated November 23, 1860; recorded November 27, 1860; consideration $150.

11. A warranty deed (p. 572) from M. McClanahan and S. Nelson to Wm. Eaton for lot 15, dated March 7, 1874; recorded same day; consideration, $200.

12. Deed (p. 573) by John Kelly by admr. to John H. Hedrick, for lot 16, dated December 12, 1867; recorded same day; consideration, $250.

13. A warranty deed (p. 574) from John Montgomery to John H. Hedrick for lot 20, dated September 24, 1867; recorded same day; consideration, $250.

14. A deed (p. 575) from J. H. Hedrick for lots 16, 20 and 21, to Granville Hedrick, dated November 8, 1869; recorded November 12, 1869; consideration, $750.

15. A warranty deed (p. 576) from Wm. Eaton to Granville Hedrick, trustee, for lots 15, 17, 18, 19 and 22, dated November 5, 1877; recorded November 6, 1877; consideration, $425.

It was admitted for the purposes of the hearing that the certificates of recorder endorsed on the deeds should be taken as the dates for recording (p.611).

(c) Adverse possession.

The parol evidence as to payment of taxes appears on pp. 588 to 606 inclusive. Thirty-eight tax receipts (pp. 607,608) were introduced by appellants for taxes paid in various amounts, on different lots in controversy, for various years from 1862 to 1891 inclusive.

Five plats, all of ground in this tract (pp. 616, 618, 619, 621), were also introduced; Woodson & Maxwell's Addition to the town of Independence recorded March 31, 1851; St. John & Dawson's Addition, recorded May 12, 1866; St. John's Addition, recorded May, 1866; Prospect Place; Torpey & Surface's Subdivision, recorded March 26, 1886.

The tract was partitioned and the lots sold under order of the court in September, 1859 (p. 563).

While the judge may have been justified in concluding that the evidence was not clear enough for him to hold that any one of the lots sued for was in the actual possession of any one prior to the appellants, yet there can be no question but that the evidence does show that some portion of the tract has been in the open, notorious, continuous and adverse possession of defendants and those through whom

they claim, for more than forty years. Woodson built his home close by this tract in 1847 (p. 638). And a portion of this land, of which these lots are a part, was inclosed by a stone fence, which appeared to be old during the war. Woodson built the fence. He had the ground enclosed in 1846 or 1847 (p. 478). Pool seems to have lived on the land at one time; Murray built a brick house upon it, which was there in 1860. Vendees of lots began building upon parts of the tracts shortly after the war, and it has been covered with houses. (See pp. 622, 625, 630, 609, 412, 413.)

III.

THE TRUST.

It is claimed that the tract of land in controversy was bought by Partridge with trust funds. It was bought for $130, December, 1832.

The deed by which it is claimed that Partridge declared it to be trust property was acknowledged March, 1839, and recorded February, 1870.

The evidence that trust funds were invested in this land is of the most indefinite kind. It was generally understood at the time that $3,000 was borrowed and put into the hands of Partridge when he went West to invest in lands. One man is found to swear that he furnished $30 for this purpose. He is the only one to give any evidence at all clear. It seems from the testimony of this man (pp. 221 and 222) that Partridge was to buy large tracts of land and then deed to each according to the amount he had contributed.

"My understanding was that this property was church property. That was my understanding; but as to who entered the land or bought it, I can not say. Edward Partridge took me to the corner stone, or the stone that marked the Temple, he and Mr. Morley together, and said that was the place where the Temple was to be built. That was the first time I ever saw that piece of ground; it was callel the Temple Block, there in Jackson County, Missouri.

"I know something about the members of the church contributing money for the payment of the purchase price of that land. I know that I contributed some money myself to it. That was contributed for the purpose of paying for this land. I paid the money I contributed into the hands of Bishop Partridge. I paid thirty dollars. That was what I put into his hands. I can not say that I know anything about other parties contributing to that sum. He had a large amount of money there, but who con-

tributed it I can not say. I contributed thirty dollars, and who contributed the rest I don't know. It was my understanding that there was money put into his hands for the purchasing of lands, and I was to have a deed. He promised me a deed for my inheritance in the land.

"I suppose the deed to the land must have been in his name, otherwise he would not have offered to make me a deed. It must have been in his name, for he told me he would make out a deed for mine; but in the meantime, before he could do it, the mob was raised, and they came there and tore things up, and we had to leave, and I never got my deed. I was to have a deed for the land that was to come to me from him, and all the other members of the church were to have deeds, that would settle on the land. They were to get these deeds from Bishop Partridge, but the land was all land of the church and didn't belong to him, although it must have been in his name. I don't know that the title was in his name for a fact, but it was my understanding that they were all to get deeds for their inheritance from him.

"It was my understanding that this land was bought with money of the church. There were some people who came here who did not consecrate their substance for the good of the church, but went ahead and bought land on their own account. They brought money there for the purpose of speculating and purchasing land, and they did purchase land, because they knew of this revelation regarding the Temple, and they knew that there would be a great many people come in there, and the country would be settled up, and there would be a good town there, and land would raise a good deal in value; and they came there with their money for the purpose of speculating, and they bought land. There were a few who went for that purpose, but not many; and of course they had a right to do it if they thought proper.

"According to my understanding the land was purchased with church monies, because Edward Part-

ridge told me he had contributed his money along with other members of the church. The understanding was that the members of the church who came there and located were expected, under the rules of the church, to consecrate their property, or a part of it, for church purposes. The purpose for which this contribution of property was accepted from the members was to purchase lands. Edward Partridge showed me the chest the church funds were in; and I saw him take money out of it, and I saw him put money into it."

And the opinion says (p. 688): "And Bishop Partridge came to Independence, Mo., to acquire lands for the Temple, and settlement of the people of his religion."

There was a good deal of evidence like this (p. 204):

"The people generally in speaking of that property called it the Temple property. I never heard it spoken of in any other way than the Temple Lot, that is what it is always called by everybody that I know anything about. People called it that for a long time and call it that yet, although other people claim it now."

The opinion says (p. 688): Proof conclusive of this issue is furnished in the fact that Joseph Smith, the founder and head of the church, its recognized Prophet and Seer, himself came to Missouri, and in 1832 held religious services on this site, and solemnly dedicated it as the spot where the Temple was to rise and shine, but the Temple never did rise or shine, unless the little church built by respondents rises and shines. As I understand it, there is no evidence to show that any of these various purchasers of this tract and parts, except Hedrick and his successor, Hall, had any notice of anything except this vague tradition that a Mormon Temple, at some time in the dim future, and in some way unknown, was "to rise and shine" on some part of this 63 acre tract."

This "Temple lot," as it was called, was indefinite in size and shape; it had no metes and bounds; it was not enclosed; it was not built upon; it was not platted; in fact, there never was any Temple lot; there was "a spot," which could be located, upon which Young at one time stood and performed some ceremony, but how much land was to surround this spot in order to make the Temple lot, no one ever determined; it was as uncertain as the time when the Temple was to be built; whether all the lots sued for, more than these lots, or only a part of them, were to be embraced within this Temple lot, upon which this mythical Temple was to be built, no one can tell. I understand that the whole 63 acres was not embraced in it, and I also understand that the church built by the branch to which complainants, at Independence, is upon a part of this tract (p. 482).

These lands bought by Partridge embraced a large quantity of lands scattered about in Missouri; the deed shows this, and Partridge's son-in-law states (pp. 227 and 228):

"E. L. Kelley was there at my house for the purpose of buying a quitclaim deed to the Temple Lot—what is called the Temple Lot here in Independence. I never saw it, but it is called the Temple Lot here. Yes, sir; he bought it; we gave him a quitclaim deed to it. He bought it from myself and wife, and got a quitclaim deed to it. The consideration for it was one hundred dollars.

"There was some other consideration. I considered that my wife had an interest in a large amount of property in this section of the country, and he was to go on and settle it, and see how it came out, you know. I do not know how he was to settle it, I paid no attention to that; I supposed, of course, that it would go through court. The way I looked at it was if the Temple Lot question was settled it would settle the whole thing at once. We gave him a quitclaim deed to two acres or thereabouts. I do not know how a quitclaim deed to two acres would settle our

property interests in this country. I am no lawyer; I am a doctor, and know more about medicine than I do about law. I only spoke that way; I do not know that I meant anything in particular by what I said. It looked to me as if the title to two acres were settled it would settle virtually the title to all the rest. Mr. Kelley was just to go on and go through with it, but there was nothing said about that part of it; but what steps he would take to recover this property would have a tendency in my favor, you know; that is all I know about it. In my own mind I included other land than the Temple Lot, a good deal more. I cannot tell you where that land lies, but some of it here in Jackson County. A large body of it is not far from Kansas City. Yes, sir; my wife and I were apprised of the fact that we had a title to the property of which we were asked to make a quitclaim, a long time before we made the quitclaim deed. We received pay for quitclaim deeds, but that was outside of this property. We received pay for quitclaim deeds for property in Jackson County, not very far from here. I am sure of that, for when I talk I mean business and know what I say. None of the land for which we received pay for quitclaim deeds was in Ray County, although there was said to be considerable of it in Caldwell County. I think it was about thirty years ago when I discovered that my wife had rights in real property here in Independence, and in Jackson County. There has been a great many lawyers tried to get me to let them take hold of it, and work it for me, but I always had enough to eat and I did not bother about it. It was a long time before this suit came up that they were after me for it. When the question first came up there was nothing in the church about it. The church had nothing to do with it at first. I mean that it came up in the first place by lawyers in Kansas City. They were after me to let them do something with our property here, and I did not want to do anything about it, and would not have done anything with it had they not urged

it on me in the first place, and it took a great deal of urging to get me to do it. There was nothing about the church when I got hold of it at first, not a bit of the church in it at all."

The deed by which complainant claims the trust to have been declared reads as follows (p. 274):

"Now, know ye, that for the furthering of the ends of justice, and as I have to leave the State of Missouri, by order of Governor Boggs, and with me also our church, I do, for the sum of one thousand dollars, to me in hand paid by said Oliver Cowdry, do give, grant, bargain and sell, to John Cowdery, son of Oliver Cowdery, now seven years old; and Jane Cowdery, three years, and Joseph Smith Cowdery, one year old, all the lands entered in my name in the County of Jackson, in the District of Lexington, in the State of Missouri. Said Edward Partridge, the party of the first part and signer of this deed, does also sell, alien and confirm to the aforesaid John Cowdery all real estate and lands he has both entered as aforesaid, and all he owns in his own name by private purchase, and holds by deed of gift, being intended for the use of the Church of Latter Day Saints or otherwise. This sale is to embrace all lots of all sizes, situated in Independence, and to embrace the lot known as the Temple Lot, and all other lands of whatever description said Partridge, the first party, is entitled to in said Jackson County, in the State of Missouri. Said Partridge also agrees to amend this deed to said Oliver Cowdery at any time for the purposes aforesaid."

IV.

THE MORMON RELIGION.

(a)

I will leave it to my associate to discuss the subtleties of this religion.

The amended bill (p. 8) states that the Church of Jesus Christ of Latter Day Saints was first organized in New York in 1830; that it removed to Ohio in 1831, and that during 1832 a branch was established at Independence, Mo.

The Great Mormon Church at Salt Lake, and the only one known to the world, is styled by the bill a "disturbing faction led by Brigham Young."

The bill alleges that complainant and defendants believe in the Bible and the Book of Mormon, but it charges that the latter are not orthodox in other matters, to-wit:

1. "All defendants (p. 9) deny that all articles adopted by your orator and its authorities after the year 1835 are true or binding or in any way presents the articles of faith to the church."

What these articles are the bill does not give the slightest clue.

2. "And all defendants insist * * * that after the year 1834 Joseph Smith * * * was a fallen and false prophet, and his teachings to be false and heretical."

The bill does not attempt to disclose what these teachings were.

3. "Your orator (p. 10) and its members believe in and teach the Book of Doctrine and Covenants of the church from its organization in the year 1830 to the present day, which is denied by defendants after the year 1834."

Whether this means that defendants believed in this book prior to 1834, but disbelieved it after that year, or whether it is meant that there were

changes made in the book, either by expurgation or addition, after the last date, which defendants do not accept, the bill does not tell us.

4. "And the defendants deny the ordinance of baptism for the dead as taught by your orator and the mother church."

5. The last charge is uncertain and unintelligible: "And in this, as well as in many other matters, defendants are now, and from their organization have been, heretical and in opposition to the teachings, tenets and ordinances of the mother church, now represented by your orator."

(b)

The only charge of heresy stated clearly enough to be answered is that defendants do not believe in baptism of the dead; this seems to be a sort of baptism by proxy—baptising a dead person by baptising a live one (p. 110).

Whitehead, a witness for complainant, having been baptised a Mormon in 1837 (p. 60), private secretary of Smith, the elder, a high priest in the reorganization church and an expert as to doctrines, says (p. 64): "I am a priest and preacher in the Reorganization Church, and I do not know whether the doctrine of baptism for the dead has ever been taught in the Reorganized Church. I do not know that it has, but I believe that it has not been taught in it. I do not know that it has, but I believe that it has not taught it. It is not taught that I know of. It was a doctrine of the church in the days of Joseph, the martyr, but I have never heard it taught in the Reorganized Church. I do not know if it is being practiced in the Reorganized Church, and it was not practiced in the original church for a long time before Joseph was killed."

Wm. B. Smith, a witness of complainant, brother of the martyr, belonging to the original and reorganized church, and an apostle (p. 123) says (p. 132):

"There was a time prior to 1844 that the original church practiced the doctrine of baptism for the dead. They did at one time, but it did not continue very long, * * but the teaching and practicing of that doctrine was abandoned before the death of my brother in 1844; but how long I cannot say. The doctrine of baptism for the dead has never been practiced or taught in the Reorganized Church of Jesus Christ of Latter Day Saints, to which I now belong."

Blair, sworn for complainant, counselor to Joseph Smith, the president of the Reorganized Church (p. 139), says: "So far as the Reorganized Church is concerned, the question of baptism of the dead is a mooted question; that it has been ruled out from the present teachings and practices of the church for the reason that there is no authority for administering it or in relation to the administration of it."

It seems to be practiced only by the Utah branch (p. 323).

(c) Much testimony has been taken to shown that polygamy was neither taught nor practiced before the death of Smith; also to show that it was contrary to the doctrines of the church.

If human evidence is worth anything there can be no doubt but that at least the doctrine was taught privately before that event (pp. 501, 502, 503, 504, 484, 487, 324, 346, 349, 358, 365, 375, 390, 396, 400, 403, 411, 416, 422). Yet, as it is not claimed that this was ever a part of the belief of defendants, I will not discuss it.

It seems that the greater portion of the Mormons in Utah did not practice it (p. 491).

REVELATIONS.

(d) There seems to be a good deal of uncertainty surrounding revelations.

The instruments through which the Almighty transmits his messages to his flock are termed "revelators" (pp. 231, 463)—a kind of celestial telephone—

the talking at one end and the listening at the other. There seems to be this same trouble with these instruments as with the ones in common use, in this, you cannot tell who is talking.

There can be no question as to the actual wording of the message; hence if the honesty of the revelator is conceded, the only question is as to whether he has been deceived; it seems that a false message may be received and a true one rejected.

The necessities of the case have originated a sort of filtering process through which every revelation must pass.

Blair—Editor of the Saints Herald and Counselor to the present Joseph Smith, says (p. 161). "In the Reorganized Church, revelations are first presented to the first Presidency, then they pass to the Twelve, then to the High Council, then to the High Priests, the seventy, the elders, the priests and the teachers and the deacons—that is the method of procedure; and, if it meets with no snags, then it is presented to the body, the entire body of the church, and if accepted by them, it becomes binding upon the church."

A command of the Ruler of the Universe, after being kicked about by these various human agencies, it seems, may finally strike a snag and sink into oblivion.

Joseph Smith testifies on this point in rather a liberal spirit.

He says (p. 107): "If anybody says anything to me, I understand that they say it, and if I hear what they say clearly and comprehend it, it is not a matter of my own judgment as to whether I hear it or not. I am forced to accept it, and judgment as to whether or not I heard the thing is not called into question, for it is a matter that is not involved in doubt at all. Whether I accept it depends upon circumstances under which the communication is received, such as whether there is reason for it, or occasion for it, or whether it comports with that already received upon

that subject, if anything has been said upon that. A man may be mistaken even though he be the President of the Church, as to the genuineness or authenticity of revelations claimed to have been received." Again (p. 108): "We may receive a revelation and act upon it and the matter afterwards be submitted to the body authorized to pass upon the revelation." Again (p. 525) he says: "We do not consider it infallible, nor do we consider the Bible infallible. We do not consider anything that passes through human hands to be infallible. * * Understand me, we hold that everything which passes through human hands is fallible." Again (p. 527): "That which is presented to us as a revelation from God is examined,and if in our opinion it be subversive of that which has been received before as a revelation from God and accepted as the doctrine of the church, then it is rejected; we take the risk of rejecting it in that case, although it may be from God."

Blair says (p. 187): "It is possible that revelations may be presented to the proper quorums and then to the body of the church and be accepted, and still not appear in the printed book."

President Smith says (p. 114): "There has been no arbiter between myself and the church at Utah, nothing but the books—the commandments and the law as we found it. No, sir, the question between the Reorganized Church and the Utah Church has never been eccleiastically adjudicated; there is no competent ecclesiastical tribunal before which the question of heresy and orthodoxy can be tried this side of the judgment seat of Christ."

V.

OTHER MATTERS.

The claim of respondent seems to be that to be orthodox, defendants must believe everything, not only of the original church, but also of that since added by the Reorganized Church. President Smith, "Prophet, seer and revelator," though annointed with considerable ceremony by his father in 1844 (pp. 60, 174), seems to have had his light "hid under a bushel" until 1860, at which time he captured the Presidency of the Reorganized Church. He says: "I was not a participant in any of the meetings or gatherings of the Reorganized Church from 1852 to 1860, and therefore of my own personal knowledge I do not know anything abut them." (p. 104). "I became connected with the church (Reorganized) first in 1860." (p. 102). "The person who effected the reorganization in 1852 affirmed that they were directed by revelation; but whether they were or not is a matter for them to testify to, and not for me; that is their testimony, not mine (p. 103). In respect to uniting with the Reorganized Church I was led by revelation. If the affirmations of the people who reorganized the church in 1852 are correct, it was reorganized in pursuance of revelation; that is what they say, but of course I cannot testify as to that. That is a matter that I am not a competent witness to prove. I cannot tell you how to ascertain whether they were deceived or not. I cannot tell you how to ascertain whether I was deceived in uniting with the organization. I do not fill the gap between the disruption at Nauvoo and the coming together again in 1852 by the assumption that the people were authorized to come together in 1852 by revelation." (p. 103.) Again he says (p. 110): "The minutes of that conference (1860), as shown in record, Exhibit N, with reference to my ordination, appear on pages 59 and 60 and read

as follows: 'Joseph Smith, son of Joseph Smith, the prophet, seer and revelator, and lineal heir to said office and station, according to the law and order of the holy priesthood, was then introduced to the conference and he delivered an address explanatory of his views, principles, doctrines and faith. On motion of Isaac Sheen it was resolved that Bro. Joseph Smith be chosen prophet, seer and revelator of this Church of Jesus Christ, and the successor of his father.' That is the first reference, the reference on page 60 is, 'By unanimous vote Bro. Smith was ordained President of the High Priesthood of the church by Bros. Z. H. Genty and Wm. Marks.' The two ordinations as high priest and president of the High Priesthood took place at the same time. I was ordained first as high priest and then as president of the High Priesthood. * * * I am (p. 111) the successor of my father in this office. * * * I am in a position to exercise the gifts of president if required and directed to do so. When directed to do so, or required to do so, I stand in a relation to receive. * * * I was not ordained by my father as his successor. * * * I claim to be his successor by lineal right and by his blessing, and lastly by the right of selection and appointment. It is not necessarily a birthright to be president of the church. * * * I do not (p. 112) know whether the doctrine of lineal right was a doctrine of the church prior to the death of my father. * * * The existence of the Reorganized Church does not depend on my lineal successorship, as I understand it. * * * "It is not a right that must be enforced, for it may never be exercised, or it may be held in abeyance. * * * I do not know whether that rule was practiced in the church prior to the death of my father."

Speaking of the editions of the Book of Mormon (p. 86), he says: "My knowledge is that they are not identical in words * * * but the substance and teaching is the same. We regard all the editions alike." Speaking of the Book of Doctrine and Covenants, he says (p. 87): "There are different editions

of that book; all the editions that I have seen that was used in the church prior to 1844 is the edition of 1835. The 1835 edition was published at Kirtland, Ohio; then there was an edition of 1845 and 1846, published at Nauvoo, Ill. There were editions published in 1852 and 1854, in Europe. One was published by Carrington, in 1869. All these editions, 1835, 1845, 1846, 1852, 1854 and 1869, are the same in substance, as far as I have had an opportunity to examine them * * but to the best of my judgment they are practically the same."

Briggs, the counselor, "to the prophet, seer and revelator," says (p. 232): "The Times and Seasons was a religious paper * * was not an inspired paper or publication. I do not so understand it, but there were things in it that were undoubtedly inspired, but not the whole of its contents. There was interspersed in it revelations from Joseph Smith, or that were made through him, that we claim were inspired * * Yes, sir, there were revelations published in that paper." (p. 232). "There were some letters (p. 233) by Mr. Smith which were published in 1842 in the Times and Seasons, I think. Some of them were in relation to baptism, the manner in which it should be conducted. These letters were never received as authority in the church, so far as I know * * * no doubt (p. 234) they were wise instructions; we hold them so. * * * We hold them to be wise instructions, but we have not yet received them. These letters were placed in the Book of Doctrine and Covenants, but not as a revelation. * * * Prior to 1845 the Book of Doctrine and Covenants had been adopted by the church. It was received by the church in 1835, that was the time that most of the revelations were published; only three or four were received after that time. These letters were published in the 1845 edition; that is my memory. That book published in 1845 was never adopted by the church; it could not have been, for the reason that the church, as a church, had been

rejected at that time, and the church as an organization had been rejected at that time. * * * It (the Reorganized Church) adopted (p. 235) the Book of Doctrine and Covenants for what it purported to be, and the standard books of the church, the Bible, the Book of Mormon and the Book of Doctrine and Covenants were adopted at the conference of the Reorganized Church, in 1852. They adopted what purported to be the Book of Doctrine and Covenants, as recognized in the writings of Joseph Smith, or written in his lifetime. They did not adopt everything contained in the Book of Doctrine and Covenants, published in 1845. * * * They adopted it, in so far as it purported to contain the revelations of Joseph Smith as contained in 1835, and the revelations that Joseph Smith, by his published writings, recognized to be his revelations. They did not adopt it in its entirety in any portion of it, but they adopted the book of 1835; what I mean to say is that there was very little difference between the editions of 1835 and 1845, as there had been only three or four revelations given between these dates, and those given after 1835 were in the 1845 edition, but as it was published after the death of Joseph Smith, of course the Reorganized Church did not recognize it. * * * The Reorganized Church did not publish a Book of Doctrine and Covenants in 1852 * * * but it was sometime after 1860. * * * The Church of Utah (p. 237) may claim that they believe in revelations, but they never claimed, to my knowledge, that they received any. I never saw or heard of a revelation that they claimed had been received by them. I never heard that they published a revelation authoritatively, that had been received by them, as they claimed. I know they make the claim of being the continuing church, based upon the Nauvoo church; the Book of Mormon and the Bible, they claim that is the foundation of their faith, that is, I suppose they do, for I have heard so, and I have never heard anything to the contrary. * * The Reorganized Church has not declared in its

conferences that it recognized all that is in the Book of Doctrine and Covenants as authority; that is not a fact, for there are several lectures that have never been recognized as authority. There are lectures on faith in there, that have never been recognized by the church as authority. I presume they are included in the Book of Doctrine and Covenants. I never saw an edition that did not have them in. * * * The Book (p. 238) of Doctrine and Covenants proper we recognize that as an authority, that part of it which purports to be a revelation; but you must remember that there are these letters and lectures in there which do not purport to be revelations, and that part we do not recognize as being authority. We recognize them as being good advice."

Again (p. 240): "The conference of 1852 recognized all members who had ever belonged to the old organization as being eligible to membership in the reorganization; that is, all members who had not vitiated their standing by overt acts against the church. * * * Of course, they were all independent branches and had no uniform identification one with another, but at the time of the conference of 1852 there were representatives from all of them assembled there at that conference. There were resolutions passed there to recognize all the branches, wherever six of more members assembled together, who had been members of the old organization, as members of the Reorganized Church."

President Smith says (p. 121): "Yes, sir, I presume it is the fact that the Reorganized Church was about as weak or weaker than some of the other organizations; I do not know that to be a fact; I state I presume it was. * * * It was comparatively weak until 1860, but it was gathering strength all the time, however. At the time I became connected with it I expect here were probably 300 in the membership; I think that was about the number that were identified with them; that was in 1860."

Joseph Smith says (p. 116): "There have been

a great many churches since 1844 that have claimed to be the successor of the original church, founded in 1830. Their name is almost legion." "These (p. 115) other factions of the church that claim succession, just like the one does here, at Independence, Mo."

Each side seems to regard the Church of Utah as a recruiting ground (p. 514).

The Mormon church has had a variety of names (p. 155): "The Church of God;" the "Church of Christ;" the "Church of Saints;" "Church of Latter Day Saints;" Church of Jesus Christ of Latter Day Saints." The name of the Utah church (p. 115) is "The Church of Jesus Christ of Latter Day Saints."

Some witnesses term defendant church as the Hedrick branch of the Mormon Church, after Granville Hedrick, who was an elder in the original church, before the death of Smith (p. 510). Reynolds, a witness for respondent, says he came to Jackson County, Missouri, in 1868, at the instance of Granville Hedrick, who came a year or two later.

President Smith says (p. 121): "There was a faction, led by Granville Hedrick, located at first, as I understood it, at Bloomington, Illinois. Mr. Hedrick published a paper there a portion of the time; I believe it was in 1864. I never got acquainted with the organization, though I knew a number of the party. I met Mr. Hedrick several times, and others who were members of the organization of which he was a leader."

Briggs says (p. 144) that in the fall of 1857, at a conference: "The hand of fellowship was extended to" Granville Hedrick and Owens; the records read (p. 145) as follows: "Upon motion, Bros. Owens and Hedrick were received as representatives of the Saints in Woodford County, Illinois, and vicinity, and the right hand of fellowship was given them." He died in 1881 (p. 460). He seems to have spent his life in trying to spread the Mormon religion.

Speaking of Granville Hedrick, one witness says

(p. 435): "There was no disagreement on any of the fundamental principles of the church, that I know of. Granville Hedrick believed in the Bible, the Book of Mormon and the Book of Doctrine and Covenants. I have seen the work of Granville Hedrick, entitled 'The Spiritual Wife System Proven False' and the true order of Church discipline; I have read it. That work of Granville Hedrick sets out that the Book of Doctrine and Covenants, as set out during the life time of Joseph Smith, was one of the fundamental works of the church."

Defendant church believes that old Joseph Smith was a prophet, seer and revelator, and so teaches."

Richard Hill (p. 468) says: "I am the trustee for this property in controversy; I hold it as trustee for the Church of Christ—the Church of Christ organized April 6, 1830, of which Joseph Smith * * was the president. Yes, sir, he is the one who organized the church, in April 6, 1830, as I understand it. We hold the property in trust for the church; we claim to be a part and parcel of that church, and hold this property in trust for that church, for the church that is in succession.

Of course I claim that we claim to be the original church, and we hold it for the church. * * * We are holding it in trust for the church, which is represented by us, which we claim is the church that was organized by Joseph Smith. * * * "Of course (p. 470) all the members of the defendant church believe in a prophet, as far as my understanding goes. If they do not, they could not belong to the church. The defendant church believes in a prophet; they believe it is a good idea to have one in the church, if they can get a genuine one. * * * I do not know of any revelation being accepted by the church within the last 15 years; I do not know of any being received by the members of the defendant church. * * * The defendant church (p 474) holds to the Book of Mormon entirely and to the Bible. We look to it and accept it as a part of our faith. * * * If we believe

(p. 443) in the principles of the same doctrine that Joseph Smith taught in 1830 (and we claim to do that) why then it might be called a branch of the church which was organized in 1830 by Joseph Smith, the seer; but, as I said before, I do not know how to designate these terms. * * * Now (p. 475) understand me, I do not repudiate the doctrine that was taught in 1831, 1832 or 1833, but after that time there were doctrines introduced in the church which I repudiated."

Alma Owens testifies (p. 456) asto the disbursement ofthe money of defendant chnrch, to pay for the improvements on the lots in controversy and for taxes.

At the present time there are perhaps fifty people who belong to defendant church (p. 466). * * There are some (p 441) members of defendant church outside of Jackson County, Missouri; there are some at Bonner Springs. * * * There are some in the Indian Territory."

THE OPINION.

The learned judge who wrote the opinion says (p. 702): "A good chancellor may be an indifferent theologian; and when he should lay aside the ermine for the surplice he might prove more bigot than justiciary." While we would not have used language so strong, yet the wisdom of the law as declared is strikingly illustrated by this opinion.

One would think from reading the opinion that the action was in an eclesiactical court, to determine which represented the true faith, complainant's branch or the Utah church. The opinion is in the nature of a "Bull," by which the great Utah church has been excommunicated. In the torrent of eloquence and argument by which this result is reached the defendants are lost sight of. Where the insignificance of plaintiffs' branch, as compared with the dominant Utah church, is referred to, it is by this magnificent specimen of rhetoric (p. 703): "No matter, therefore, if the church at Nauvoo became a prey to schisms, after the death of Joseph Smith, and presented as many frightful heads as did the dragon which the Apostle John saw in his vision on the Isle of Patmos; if there was one righteous left in Sodom, the promise of the covenant and of the law of the land is to him. It is neither good law nor Bible history to say that because the Saints became scattered and without an organism, the faithful lost the benefit of the church property. Forsooth, the Children of Israel were carried captive to Babylon—"the mother of harlots and abominations of the earth"—they did not cease to be children of the covenant, nor lose their interest in Jerusalem."

The deed by which respondent contends a trust was created was not recorded for 31 years, lacking about a month, after it was executed, yet the various purchases of parts of this tract of land are charged

with notice of this secret trust, and the idea of the learned judge as to the character of evidence proper to impart such notice is forcibly expressed by him in the following language: "And it would be about as reasoable to suppose an Israelite could become the purchaser of a lot in Jerusalem, and claim that he was an innocent purchaser, against the design of his people, to re-establish there the New Jerusalem as to say these respondents are innocent purchasers." (p. 698).

The Court, in commenting upon a certain matter in the decree of partition, read in evidence by appellants, says (p. 695): "That part ofthe decree was a mere brutum fulmen. Recitations made in the partition proceedings and deeds are not binding on strangers."

Yet, strange to say, this was held to be the law right after it wes held that a simple recital (p. 685) by the Lamoni congregation, in its articles of association, as a matter of law vested in it, the titles to all real and personal property, of other congregations, incorporated or otherwise, whether located in other states and countries or not; this includes, of course, all property and its increase, of the dominant Utah church, purchased with funds, donated prior to 1844.

No doubt but that the Utah church is badly demolished by the opinion. The judge refers to Brigham Young (p. 699) as "a man of intellectual power, shrewd and aggressive, if not audacious. Naturally enough, such a man gathered around him the greater numbers, and it was an easy matter for him to seize the fallen ruins of the Presidency. * * * There can be no question of the fact that Brigham Young's assumed presidency was a bold and bald usurpation." This great church, however, is not a party to this suit.

Defendants are taunted with being allies of the Utah church (p. 699), and yet the judge quotes at length (p. 701) from a book of Hedrick to show that polygamy was never a Mormon doctrine, saying before doing so, "No more complete and caustic refutation of this claim made by Brigham Young can be

found than in exhibit "W," in this case, in a book entitled 'The Spiritual Wife System Proven False,' issued by Granville Hedrick, the head of respondent church, in 1856. He ridiculed the pretension of Brigham Young that he had this revelation, unproclaimed, locked up in his private chest, for nine years."

To support the claim of complainant that the Partridge deed had been delivered, the opinion says (p. 689): "Presumptions in equity should be more liberally indulged after such a long lapse of time, where the loss of witnesses b y death and removals and disappearance often render direct proof impossible."

But when it comes to rendering of no avail a deed (the parties to which died long ago), and through which defendants claim, executed in 1848 and promptly recorded, the judge raises an objection not raised by counsel in their briefs below, saying (p. 693): "A yet more fatal objection to this deed as a valid conveyance against the unrecorded deed from Partridge of 1839 is the fact that no evidence whatever was offered tending to show that Poole paid a valuable consideration for this deed. * * * To constitute an innocent purchaser in such case it is not sufficient that it should appear that a deed was executed, but proof must go farther and show affirmatively that a valuable consideration was paid, and that, too, before the prior deed was placed on record."

When the defendants claim that complainants branch is not orthodox according to its own standard, eleven representing the quorum, instead of twelve, the judge finds a ready answer, as follows (p. 705): "I believe the New Testament records it as a histrical fact that Peter stood up with the eleven after the apostacy of Judas Iscariot."

The deed of Partridge to Cowdery (p. 274) not dated, but acknowledged March 25, 1839, and not recorded until February 7, 1870, was acknowledged before one of the justices of the County Court of Caldwell County, Missouri, the justice reciting that he does it under his hand and private seal.

The deed of the Partridge heirs to Poole, dated May 5, 1848, recorded June 16, 1848, was acknowledged before the clerk of the Circuit Court of Atchison County, Misouri, the acknowledgment being attested by the hand of said clerk, under his private seal he declaring that there was no seal of the court provided (p. 547). Defendants hold under this deed, and complainant (p. 208) proved its execution. The first was admitted and the last excluded, the court holding the acknowledgment to be bad (691). The judge also held that it should not be admitted, for the further reason that neither the original was offered, nor any affidavit nor other proof of its loss, or that it was not under the control of defendants. When this deed was offered by defendants, it was stated (p. 546), "and it is admitted by the plaintiff that the original was not within the possession or control, or within the reach of the defendants, or any of them."

Again the opinion, referring to the statute (p. 690), requiring where deeds are not recorded within one year after the execution, before a copy can be used, it shall be proved to the satisfaction of the court that the person who executed it is the person named as grantor, says, among other things: "The law always presumes that a public officer does his duty. It is there fore to be presumed that the Recorder of Jackson County, in admitting the deed to record, inspected it (a deed not recorded for more than thirty years after execution), "and was satisfied of its original character."

In speaking of defendants, the opinion says (p. 705): "They are but a small band;" and complainant, in the opinion, is treated with the greatest consideration; a corporation which does not need this property; property held by those of kindred faith and for religious purposes; property for which complainant never paid a cent, while defendants and those through whom they claim have paid full value for it; have paid the city, state and county taxes for a great

many years; property which defendants have improved and hold in good faith; yet, notwithstanding all this, the opinion taunts defendants (p. 785), styling them "ecclesiastical nondescripts," in theory and "in practice, Squatter Sovereigns."

THE DECREE (p. 29).

A decree is rendered in favor of complainant, who has never been in possession of any part of the land sued for or of the tract of which it is a part; no one under or through whom it claims has been in possession; complainant is decreed to have the equitable title to the lots sued for, they being charged with a trust in complainants' favor.

"It is decreed that respondents, nor neither of them, have any legal or equitable interest therein." "It is further ordered, adjudged and decreed by the court that the absolute title to said property be and is vested in complainant." The decree also awards possession to complainant.

So then, it seems that if one having the equitable title to land, desires the legal, all he has to do is to sue one who has not title of any kind, and get a decree.

This course can be recommended at least on account of its simplicity.

Stripped of a mass of verbiage, by which the decree is sought o be disguised, it is nothing, even upon complainant's theory, but a decree against an intruder, in favor of one who has the equitable title, and, where possession has never been in complainant or in any one by or through whom it claims. It is in reality a suit of ejectment, based on an equitable title.

BRIEF.

THE COMPLAINANT A STRANGER TO THE TITLE.

A congregation worshiping at Lamoni, Iowa, in June, 1891, organized, as it had a right to do under the statutes of that State, the corporation which brings this suit. The general conference of this sect, in April, 1891, gave respondent, as well as all other congregations, wherever they might be, permission to incorporate. This permit was merely formal, for these congregations got their rights to incorporate, not from the conference, but from the laws of the states where they dwelt. If those laws gave this power, they could do so; in the absence of such laws, they could not. This conference undertook to provide what the articles of association should contain; that they should be like those of one already incorporated in Illinois. This likewise had no force. These articles were not to be acording to the dictation of some sect, but they had to follow the statute in such cases made and provided by the State where the congregations were domiciled. The State could not compel them to incorporate, but if they desired to exercise this privilege, they could only do it by complying with the law.

Respondent claimed, and the court so held, in effect, that it had captured all the property, real and personal, which belonged to all the other congregations of its sect, whether incorporated or otherwise, and, no matter where it was situated, including all that was owned by the original church, in 1844. How was this rich capture effected? By inserting among its articles one which declared that it had done so. The despoiled were helpless. Titles legal and equitable were wrested from them even before they were aware of it. The transferee alone was the actor. It

gave property of others to itself. It was both party of the first part and party of the second part. If this be true, this litle benevolent Iowa corporation has the longest arms of any corporation ever created, for they reach across the boundaries, not only of states and territories, but of countries outside; they even reach over the heads of the congregation at Independence, Mo. (of like faith), which has a church opposite the lots in suit. It outranks all other corporations of its religious order, in every state, territory or kingdom, including the one in Illinois, from which it borrowed this all-devouring article.

The statutes of Iowa (see record, p. 312), like those of other states, prescribe what shall be done in order to incorporate. Those seeking to do so must sign a certificate or articles containing certain things. What they are to contain depends upon the statute, and if anything else is inserted, it is surplusage.

What the powers of this conference of April, 1891, were, the record does not disclose. Certain it is, that it will not be presumed that the delegates had the power to give away the property of the various congregations which they represented. Power in such a delegate to (viva voce) transfer title to land, seems to a lawyer supernatural.

Of course they had no such power, and their action cannot be tortured into an attempt to exercise it.

In the Eastern R. Road Co. v. Vaughan, 14 N. Y. 551, the court says: "A second objection is, that the articles of association contain a provision not authorized by the act, viz.: Thatthe capital stock may be increased by the directors alone, without consulting the stockholders. The want of authority for this provision cannot affect the validity of the incorporation. The articles must contain the statements affirmatively required by the first section of the act, because these statements constitute conditions precedent to the right of the company to become incorporated. If unauthorized provisions are added, all acts done pursuant to such provisions will be void; but

until the company is proceeded against for an abuse of its franchises, its rights as a corporation will not be affected by such unauthorized provisions."

In Tennessee corporations are created by a decree of the Chancery Court. It was held, in Heck v. McEwen, 12 Lea, 97, that the decree organizing a corporation for a purpose provided by ageneral law is valid to the extent of the provisions of that law, and void only for any excess of powers and privileges which it may undertake to confer beyond the provisions of the statute.

In G., L. & H. Ins. Co. v. Kamper, 73 Ala. 341, the court says: "Whether deriving existence from a special law or from incorporation under the general law, the corporation is an artificial being, of legislative creation, having no other powers or properties than such as the law confers, or which may be incidental to their very existence. The mode of incorporation the statutes have carefully prescribed. The persons proposing to be incorporated must file and cause to be recorded in a designated public office, a declaration in writing, stating the name of the corporation, the objects for which it is formed, the amount of the capital stock, the number of shares into which it is divided, the names of the stockholders and the number of shares each may hold, the office and the effect ofthe declaration the statutes do not leave in doubt. When recorded, the persons signing it and their successors become a body corporate, by the name stated therein and with the powers conferred by law. It is an acceptance by the corporators, under the name designated, for the objects expressed, of the corporate powers and capacity the law confers, and a statement of the principal constituents of the corporation, the amount of the capital stock, the names of the stockholders and the quantity of interest each has in the capital stock. There is no authority of law for introducing more into it; if more be introduced, it is a mere surplusage, not adding to or detracting from the force of the declaration.

A controling purpose, as we suppose, in authorizing or in compelling the creation of private corporations under general laws, is to secure uniformity and equality of corporate powers, functions and privileges; that all corporations of the same class, formed for like purposes, should possess the same capacities and properties and exercise and enjoy the same franchises and privileges. Unless it was intended to work a radical change in the nature and character of these artificial beings, the mere creations of the law, and to subvert the whole theory which had prevailed in reference to them, it cannot have been contemplated that they should for themselves create powers and privileges by declaration or reservation, whether the declaration or reservation is expressed in the articles of incorporation or in the constitution or by-laws ordained by the corporators for their government. Such declarations or reservations would soon become more liberal and diverse than was the liability and diversity of the grants of corporate power by special legislative enactment, the evil it was intended to remove. Of every corporation formed under the general law, the law itself becomes the charter, defines and enumerates the powers which are to be exercised, the nature and extent of corporate franchises and privileges. The declaration of incorporation in the constitution and bylaws adopted for corporate government, do not form the charter or define or enumerate the corporate powers. These are the acts ofthe corporators. The charter is the grant from the power of the State; and by that source only can be varied or enlarged."

By granting charters the State does not change the congregations, either as to their belief or mode of worship. There is no such thing in law, for example, as a Protestant or Catholic charter. Doctrines are not required to be put in charters, and if they are there, even stated incorrectly, whether by accident or design, we think it would not affect the congregation, forthe reason that it is surplusage; when

the congregation incorporates they worship as before, and are just as local as before. Looking at them, you see no change. In other words, charters are allowed simply to give them a more advantageous civil stand, to some extent, at least, as in business enterprises.

The pleader saw these absurdities staring him in the face when he drew the amended bill, hence the vague and wild allegations that the Iowa corporation, born June, 1891, is the same being as the Illinois corporation, born October, 1872; that it is the organization of 1830, in New York; that it was removed to Ohio in 1832, and that the 1891 corporation established a church in Independence, Mo., in 1832.

It is true that business corporations of one State may do business in other States. It is true that they can own real estate at home as well as in other States, providing the laws of the State where the ground is permit it.

It may be true thathe same persons incorporated in one State may become incorporated in another, and for the same business. But even then each corporation would be separate and distinct—a different being; each is the corporation of the State creating it; so that if the life of one be taken, the other will not die.

In Ins. co. v. Francis, 11 Wall, 216, the court says: "The declaration avers that the plaintiff in error is a corporation created by an act of the legislature of New York, located in Aberdeen, Miss., and doing business there under the laws of the State. This, in legal effect, is an averment that he defendant was a citizen of New York, because a corporation can have no legal existence outside of the sovereignty by which it was created. Its place of residence is there and can be nowhere else. Unlike a natural person, it cannot change its domicile at will, and, although it may be permitted to transact business where its charter does not operate, it cannot on that account acquire a residence there."

In Relfe v. Rindle, 103 U. S. 225, it is said: "No State need allow the corporations of other States to do business within its jurisdiction unless it chooses, with perhaps the exception of commercial corporations, but if it does, without limitation, express or implied, the corporation comes in as it has been chartered. Every corporation necessarily carries its charter wherever it goes, for that is the law of its existence. It may be restricted in the use of some of its powers, while doing business away from their corporate home, but every person who deals with it anywhere is bound to take notice of the provisions which have been made in its charter for the management and control of its affairs, both in life and after dissolution."

Memphis R. R. v. Alabama, 107 U. S. 585, is a very strong illustration of this point.

Of course case can be referred to of the consolidation of railroad companies of different States, where the charters of the corporations and the statutes of the State provide for it, but such cases have no bearing on this one.

b.

The statutes of Iowa, by which respondent was created (p. 312) declares that "any three or more persons * * * who desire to associate themselves for * * * religious purposes * * * may make, etc., * * * and have recorded * * * in the county in which the business of such society is to be conducted" etc.

"The persons who shall have signed * * * and their associates and successors * * * shall be a body politic and corporate."

The person signing and their associates are the corporation which by the law is local, having its home in the county where the congregation worship.

Now, leave out of sight the deed to Blakeslee, and assume that the deed of Partridge, to Cowdery heirs, of March, 1839 (p. 266) has the force claimed for

it; if so, then it related back to the deed by which he got title (p. 274), December, 1831, for it is claimed that he recites therein that he purchased this land with money put in his hands for the Mormon church. If this be true, a resulting trust arose when he took the deed to himself. The deed by Partridge does not create the trust; it is simply evidence of that fact.

Who was entitled to this tract of land, as cestui que trust, from 1831 down to June, 1891, when respondent was incorporated? If, as claimed, this respondent corporation existed during the whole period of 60 years prior to its existence, then, of course, it could have sued. It would seem, however, that this claim is reduced to an absurdity. Which congregation could have enforced the trust up to the dispersion, in 1844? Which one after that, the one in Ohio, the one in Michigan, the one in Iowa, or the one at Independence, Missouri? If any one could have recovered, it must have been the latter.

It will be presumed, in absence of evidence to the contrary, that the land was purchased for the local church.

Baker v. Fales, 16 Mass. 506.

If it appeared that members of a religious order in one State gave money to one oftheir ministers with which to buy ground for church purposes in a distant State to which he was moving, no one would say that it was given forthe purpose of founding a place of worship for the donors, but for a congregation located or to be located at the point where the ground was bought.

Each member may have a general interest in all other branches of like faith, yet there is a peculiar and different interest that each has in his own congregation, for it is his congregation, his religious home, and, while the property may be termed church property, it is owned by the local congregation of which he is a member.

II.

COMPLAINANT UPON ITS THEORIES NOT ENTITLED TO RECOVER.

Assuming, for the sake of argument, that the equitable title is in respondent, it admits it does not have the legal. The theory of the suit, in view of the decree, is that it has the equitable; that it desires a decree for the legal title, and then for possession.

The decree finds broadly that appellants have neither the legal nor the equitable title, and the opinion declares that they are simply "squatters."

If the respondent has the equitable, and the legal does not rest in appellant trustee, where is it? It must be somewhere, for the law does not allow the legal title to become extinct. It must be in the heirs of George A. Blakeslee, deceased, who got the deed from the Cowdry heirs. (We, of course, for the moment, leave out of sight questions of laches, statutes of limitation and adverse possession).

If so, how can respondent get the legal title by a decree, when those who have it are not parties?

Perry on Trusts, Vol. 1, Sec. 344, says: "In the United States the heirs or executors will take the trust property, and they must settle the accounts of the testator, in relation to the trust. They must also see that the property is protected and preserved, but they are not under any obligation to execute the trust. They may decline the office, and generally the court will appoint new trustees to succeed the original trustees. If the heirs or executors continue to act as trustees, they will be liable for no past breaches of trust, but only for breaches that occur under their own management."

Where a trustee dies, the title of the property, if it be personal, vests in the executor or administrator, if real in the heirs.

Perry on Trusts, Vol. 1, Sec. 83.

"It is manifest from the se facts that the whole legal estate in the land and building vested in the grantees of the deed of 1812, and that respondent society and the members of the Methodist Church were the cestuis que trust. The election of new trustees by the society, in conformity with the usages of their church, created no privity of estate between them and the trustees who took the land by the deed, and could have no effect in law to divest or change the title."

Peabody v. E. M. Society, 5 Allen, 541.

In West v. Spitley, 121 U. S. 557, the court says that the plaintiff cannot maintain the suit to compel the conveyance of legal title, for the reason that the defendant having the legal title has not been served with process and has not entered his appearance.

In the Catholic Church v. Tobbein, 82 Mo. 424, it appears Tobbein died, leaving by will one-half of his estate to the Catholic Church at the city of Lexington, in the State of Missouri. After Tobbein's death that congregation incorporated under that name, and brought this suit. The court, following Frank v. Drenkhahn, 76 Mo. 508, held that "the plaintiff did not acquire by its incorporation any of the property rights of the Catholic Church at the City of Lexington, and therefore cannot maintain this action."

In Draper v. Minor, 36 Mo. 293, the deed was to persons, naming them, "trustees of the Methodist Episcopal Church (South)," for a consideration of $500; two had died, and the other applied to the court for the appointment of two others. The court, after saying that it did not appear whether the trustees or the church furnished the money for the purchase, said:

"If it was furnished by the church, then most certainly the court, upon proper application, would order these plaintiffs to convey it to such person or persons as the church might name, to hold it for their use and benefit; but if, on the contrary, the money

was furnished by these plaintiffs, the naked fact that the grantors in the deed have described them as 'trustees of the Methodist Episcopal Church (South)' would not of itself operate to destroy their interest in the property. In the former case they would hold the property in trust for the church, and would be compelled to convey to any persons the church might nominate to receive it; but this could only be done upon proof of the fact that the church furnished the money with which the property was purchased. Upon the face of this deed, the property belongs to the grantees in the deed; and to divest them of title, it must be shown aliunde that the purchase money was furnished by the church. The legal title is in the grantees; but in case nobody else furnished the purchase money, then the grantees will be regarded as holding the property in trust for whomsoever furnished the purchase money."

If, then, the above views be correct, there can be no question of vacancy in the board of trustees as respects this property, until the question of title is first settled. If it belongs to the grantees, no trustees are necessary; they can manage it for themselves. If the church is entitled to it, then the grantees must first be divested of their title, and the title vested in some person or persons, for the use of the church.

By Chap. 166, R. S. Mo., "The cicuit has a control over trustees." It was under this statute appellant trustee was appointed in place of Hedrick (p. 578). The states have various provisions on this subject.

After the hearing had begun, respondent again amended its bill (p. 27) by striking out the words "in fee simple by title absolute" after the word "owner," and by inserting the word "equitable."

Will a bill in favor of an equitable owner of land be sustained against a "sqatter" for possession?

In Lewis v. Cocks, 23 Wall, 469, the court says: "Viewed in this light, it seems to us to be an action in ejectment, in the form of a bill in chancery. Ac-

cording to the bill, excluding what relates to the alleged fraud, there is a plain and adequate remedy at law, and the case is one peculiarly of the character where for that reason a court of equity will not interpose. This principle in the English Equity Jurisprudence is as old as the earliest period in its recorded history."

In Fassett v. Gregg, 113 U. S. 554, it is said: "To give a court of equity jurisdiction, the nature of the relief asked must be equitable, even where the suit is based on an equitable title. The plaintiff does not allege that the defendants, who are in possession of the premises, have the legal title, or that they obtained possession under any person who had it; nor does she state any facts which connect them with her equity. They being merely naked trespassers in possession, she prays that they may be turned out of, and she who has only an equitable title, may be put in possession. The relief prayed for is such as a court of law is competent to grant, if the plaintiff's title would justify it. But the plaintiff does not seek by her bill to better her title. If all the relief asked for were granted, she would still have an equitable title only. The case is therefore an ejectment bill, brought on an equitable title. In these respects it is similar to the bill in the case of Galt v. Galloway, 4 Pet. 332, * * * p. 555. This decision is in point, and shows the bill to be without equity as to those of the defendants who are in possession. Their possession is good against all the world except the true owner. As the bill asserts no equity against them, they have the right to stand on their possession until compelled to yield to the true title, and to demand a trial by jury of the question whether the plaintiff has the true title. The plaintiff cannot deprive them of that right by neglecting to acquire the legal title, and upon the ground of her equitable title ask the aid of a court of equity. She can turn the defendants out of possession only upon the strength of the legal title, which she must first acquire. Having done this, a court of law is the

proper forum in which to bring her suit." Citing cases.

There is a class of trusts which are to last until a certain time, or until a certain thing happens, and no longer; in these cases we can admit that the title would vest in the beneficiary when the time expired or the event took place, without the action of anyone. And if a deed is made to trustees, naming none, to use of another, we can admit thathe title would also vest in the one for whose benefit the land was conveyed.

III.

The judge did not seem to be exactly certain as to what kind of a decree respondent was entitled to, as against these "squatters." While the decree says nothing about " a cloud," the opinion says a decree will go, among other things, "removing the cloud from the title."

But it is as difficult to remove the cloud by a decree in this case as it is to vest the legal title in respondent, when there is no defendant having any title.

The statute of Misouri, Chap. 33, p. 548, Vol. 1, says that the plaintiff must be in possession to bring this action. Our decisions are to this effect.

Dyer v. Bauermeister, 87 Mo. 134.
And cases cited in this opinion.

And not only must he be in possession, but he must also have the legal title. (Our statute makes an exception in favor of life tenant, and one with "an unexpired term of not less than ten years.") We do not contend that a bill to remove a cloud shall be according to the practice prescribed in the statute regulating the proceeding.

In Orton v. Smith, 18 How., 265, the court said:

"We think the court erred in entering such a decree. Those only who have a clean legal and equitable title to land connected with possession have any right to claim the interference of a court of equity to give them peace or dissipate a cloud on the title.

"A bill of peace against an individual, reiterating an unsuccessful claim to real property would formerly lie only where the plaintiff was in possession, and his right had been successfully maintained. The equity of plaintiff in such cases arose from the protracted litigation for the possession of the property, which the action of ejectment at common law permitted. This action being founded upon fictitious demises between fictitious parties, a recovery in one action constituted no bar to another similar action or to any number of such actions. * * * Thus, the party in possession, though successful in every instance, might be harassed and vexed, if not ruined by a litigation constantly renewed. To put an end to such litigation and give repose to the successful party, courts of equity interfered and closed the controversy. To entitle the plaintiff to relief in such cases, the concurrence of three particulars was essential: He must have been in possession of the property; he must have been disturbed in its possession by repeated actions at law, and he must have established his right by successive judgments in his favor."

Holland v. Challen, 110 U. S. 19.

"A bill to remove a cloud upon the title of real estate differed from a bill of peace in that it did not seek so much to put an end to vexatious litigation respecting the property, as to prevent future litigation by removing existing causes of controversy as to its title. It was brought, in view of anticipated wrongs or mischiefs, and the jurisdiction of the court was invoked, because the party feared future injury to his rights and interest. Story's Eq., 826. To maintain

a suit of this character it was generally necessary that the plaintiff should be in possession of the property, and, except where defendants were numerous, that his title should have been established at law or be founded on undisputed evidence of long continued possession."

This case, same case p. 20, was based upon a statute of Nebraska expressly giving the right to bring suit to quiet title to persons out of possession, and the court says it will allow the plaintiff to enforce his rights upon this statute in a court of chancery, as the land was not occupied by any one (p. 21).

Whitehead v. Shattuck, 138 U. S. 146, was a suit to remove a cloud based upon a similar statute in Iowa. The defendant was in possession. The court dismiss the bill. The complainant relied upon the case in the 110 U. S., but the court said that in that case no one was in possession, so that the party could not have resorted to ejectment. The Nebraska statute again came in question in Frost v. Spitley, 121 U. S. 57, the court holding that plaintiff could not maintain the suit unless he had the legal title.

Nor will a bill be entertained against an instrument void on its face.

Piersoll v. Elliott, 6 Pet. 95.

IV.

STATUTE OF LIMITATIONS.

We think onthis subject the court erred twice:

1. In holding that, although one may have the actual, open, notorious and exclusive possession of a part of a tract, e. g., as by fencing, under a deed to the whole, which is color of title, yet he must also exercise "the usual acts of ownership over the whole" of the rest of the tract in order to have possession of the part so fenced.

2. In holding (p. 694) that "the segregation of the land into parcels and distinct lots, with dividing streets, broke the continuity of the tract of 63 acres and necessitated some open, visible acts of ownership over each parcel."

That is, if one takes possession of a part of a tract, as above indicated, and afterwards subdivides a part of it into lots and blocks by means of a plat, then, no matter if he continues the possession of the part not platted, it does not affect the part platted. In other words, the platting under such circumstances, is an abandonment of possession, as to the lots.

When one takes the actual, open, notorious and adverse possession, under a deed, which is color of title, of a part of the land described, that is possession of the whole. In other words, when one so takes possession, it is notice to the owner, of the claim he is making, as effectually as if he took actual possession of all, for his claim of ownership of a part is a claim of ownership of all. This is the difference between one holding under color, and the one who takes possession, having nothing to indicate his claim except actual possession.

In Harbison v. School District, 89 Mo. 187, the court said:

"The actual possession of part of the lot, claiming the whole under the deed, was equal to actual posses-

sion of the entire t, without color of title to any part of it."

In Gaines v. Saunders, 87 Mo. 563, it is said: "It is, also, insisted that inasmuch as John Middaugh held a deed to one parcel of land and two patents to two other parcels, that his color of title only extended his possession to the tract on which the house was built and the field was enclosed. The land in question was a contiguous body lying in sections six and seven, and the evidence tends to show that when John Middaugh took possession he had the entire body of land surveyed, fenced the north side of the southwest quarter of section six, built a house and enclosed about thirty-five acres in section seven, claiming the sheriff's deed to be void, and all the land embraced in his patents and deed. This, we think, was sufficient to justify the court in instructing that the color of title extended his possession to the entire body of land in suit."

So in Chapman v. Templeton, 53 Mo. 465: "A mere trespasser can only claim the land of which he has the actual possession, so as to acquire title under the statute of limitations. But if he goes into the possession under the color of title, his possession of a part will extend to the whole tract, as described in the defective conveyance. To this end a defective conveyance, or a conveyance from one having no title, if bona fide taken, may be used in connection with adverse possession of a part of the tract, in the name of the whole, so as to acquire title under the statute of limitations."

In Ellicott v. Pearl, 10 Pet. 442, it is said: "Nothing can be more clear than that a fence is not indispensable to constitute possesion of a tract of land. The erection of a fence is nothing more than an act presumptive of an intention to assert an ownership and possession of the property, but there are many other acts which are equally evincive of such an intention of asserting such ownership and possession, such as entering upon land and mak-

ing improvements thereon, raising a crop of corn, felling and selling the trees thereon, &c., under color of title. * * * In short, his entry being under color of title by deed, his possession is deemed to extend to the bounds of that deed; although his actual settlement and improvements were on a small parcel only of the tract. In such acase, where there is no adverse possession, the law construes the entry to be co-extensive with the grant to this party, upon the ground that it is his clear intention to assert such possession. This doctrine is well settled."

If A plats a piece of ground into ten lots and sells to ten persons each a lot, each man's possession would enure simply to the benefit of the lot which he bought. Why? Because his possession would not extend beyond the land described in his deed. Yet, if A had held possession of the tract, according to the statute, for nine years, then the purchaser would only have to continue one more, to get title by adverse possession.

And if A only platted one-half of the tract, having acctually held possession of the other half, according to the statute, and the whole tract, under color of title, for nine years before platting, then, if he continue possession as before for one year, he would get title to the whole, by adverse possession. In other words, platting, instead of working an abandonment, would be an additional act of possession.

In Elicott v. Pearl, (supra), p. 444, it is held that if A enters under B, his possession must be consistent with the title of B. If he entered under a deed from B, then his possession would be co-extensive with the boundaries prescribed in that deed. If he entered with a deed, his possession must be either deemed a continuation of that of B, or bounded by his actual occupancy. That, if a landlord settles a tenant, without bounds, upon a tract of land, he is in possession to the limits of the claim. But if the tenant is restricted by metes and bounds to a part only of the land, the landlord's possession is in like manner limited. And, upon the same principle, if the proprie-

tor of the tract sells a part of it, designated by metes and bounds, and the vendee enters possession, his entry must be deemed of his own land only, and it has no effect as entry upon or possesion of the rest of the tract.

Fletcher v. Fuller, 120 U. S. 553, says: "Uninterrupted payment of taxes on lot for 24 consecutive years is "a powerful evidence of claim of right to the whole lot," and the court quotes from St. Louis Public Schools v. Rissley's heirs, 40 Mo. 356, 370: "Payment of taxes has been admitted in questions of adverse possession, and may have an important bearing, as it is not usual for one owning realty to neglect paying taxes for a period which would be sufficient to constitute a bar under the statute of limitations, or for one to pay taxes having no claim or color of title."

And the opinion quotes from a Vermont case (p. 534): "To constitute a continuous possession it is not necessary that the occupant should be actually upon the premises continually. The mere fact that time interevenes between successive acts of occupancy does not necessarily destroy the continuity of possession. The kind and frequency of the acts of occupancy necessary to constitute a continuous possession depend somewhat upon the condition of the property and the uses to which it is adapted in references to the circumstances and situation of the possessor and partly on his intention. If, in the intermediate time between the different acts of occupancy there is no existing intention to continue the possession, or to return to the enjoyment of the premises, the possession, if it has not ripened into title, terminates, and cannot afterwards be connected with a subsequent occupation so as to be made available toward gaining title; while such continual intention might, and generally would, preserve the possession unbroken."

And the case of Leeper v. Baker, 68 Mo. 402, referred to in the opinion in this case, goes farther than any case we know of in Missouri in holding slight acts sufficient evidence of adverse possession.

Of course it was not referred to for that reason; it was quoted as if holding that if a tract of land is divided into quarter quarter sections, then there must be actual possession of a part of each tract, before one can claim the whole under color of title, a doctrine not laid down in that or in any other case in Missouri, or, so far as we know, anywhere else.

What is held is this, that if A claims to own four forties under a deed to him which describes the four, then, as against B, who never had any interest in but one of the forties, A must take possession of some part of this one, for the reason, we suppose, that seeing A in possession of a tract of land he never had any interest in, would be no evidence to B that A was claiming an interest in that which B actually owned.

It is nowhere intimated that if B had owned the four forties and A had taken possession of one under the deed, he would not have held the entire tract under color of title. Hence the doctrine has no bearing on this case.

In Gaines v. Saunders, just quoted from, there were three distinct parcels of land. (

The doctrine of Barr v. Gratz, 4 Wheat. 221, is this: G agreed to sell to A 750 of 1000 acres; A taking possession of the entire tract this was the possession of G and inured to the benefit of both, according to the nature of their titles. Now, if G should make the deed to A of 750 acres, as to those acres he became "sole siezed in his own right," and that possession of them afterwards would not inure to the benefit of G, but if he kept possession of the other 250 acres as well it would. The court says on another point: "Where two persons are in possession at same time under different titles, the law adjudges him to have the seizin of the estate who has the better title. Both cannot be seized, and therefore the seizin follows the title." The principle referred to in Leeper v. Baker (supra).

At the hearing the bill was amended so as to include lot 22; no suit was brought as to said lot un-

til the amendment, at which time appellants themselves had been in adverse possession for more than ten years. Sims v. Field, 24 Mo. App. 565.

The next question is as to how far the statute of limitations apply to trust estates.

In Philippi v. Philippi, 115 U. S. 156, it is said, "conceding what is contended for by counsel for plaintiff that the statute of limitations does not run against an express trust, it must be borne in mind that this rule is subject to this qualification, that where the trust is repudiated by clear and unequivocal words and acts of the trustee who claims to hold the trust property as his own, and such repudiation and claim are brought to the notice of the beneficiary in such manner that he is called upon to assert his equitable rights, the statute of limitations will begin to run from the time such repudiation and claim came to the knowledge of the beneficiary."

The opinion quotes from Nettles v. Nettles, 67 Ala. 599: "It is true as a general rule that when the relation of trustee and cestui que trust is uniformly admitted to exist, and there is no assertion of adverse claim or ownership by trustee, lapse of time can constitute no bar to relief. But when the trust relation is repudiated or time and long acquiescence have obscured the nature and character of the trusts, or the acts of the parties or other circumstances give rise to presumption unfavorable to its continuance, in all such cases a court of equity will refuse relief on the ground of the lapse of time and its inability to do complete justice."

In Merrain v. Hassam, 14 Allen 522, the deed creating the trust was on record; the trustee conveyed by warranty deed with covenants; the court says:

"The rule is stated generally in the text-books and is found in many adjudged cases, that no lapse of time is a bar to a direct trust; and it is undoubtedly true, if taken with the proper qualifications. The possession of the trustee not being averse to the cestui que trust as between them there is no limitation of

time, unless there is a clear repudiation of the trust, brought home to the party so as to require him to act as upon a clearly adverse title. But where the trustee sells the trust estate to a purchaser for value with warranty and without any intimation, in the deed of conveyance of a subsisting trust, and the vendee enters and occupies the estate, doing no act which recognizes in any manner the existence of the trust; and there is no fraud or concealment and the cestui que trust is under no disability, the possession must be regarded as adverse to both the trustee and the cestui que trust, and the time which would bar the legal title is equally effectual to bar the equitable right."

Adverse possession, according to the statute, for ten years, transfers the title from the owner to the person so holding.

Allen v. Mansfield, 82 Mo. 693.
Long v. K. C. Stock Yards, 107 Mo. 304.

This seems to be the doctrine of the U. S. Supreme Court.

Campbell v. Holt, 115 U. S. 623.

And construction of statute of limitations by Supreme Court of State will be followed by courts of the United States.

Leffingwell v. Warren, 2 Black. 599.

Percy v. Cockerills Ex. 10 U. S. Ap. 592.

Now, when we add to these considerations and precedents the weight always attached to the lapse of time in raising presumptions and quieting titles as the means of maintaining peace, order and harmony in the relations of civil society, there can be but one right conclusion in the case. The importance of such presumptions is stated with great emphasis and fullness of reference to authorities by Justice Kennedy in Bellas v. Levan, 4 Watts. 294, where he sums up in this conclusion: "It is too obvious

not to be seen and felt by every one how very important it is to the best interests of the State that title to lands, instead of being weakened and impaired by lapse of time, should be strengthened until they shall become incontrovertibly confirmed by it."

Fritz v. Brandon, 78 Pa. 355.

V.

The Statute of Limitations and Resulting Trusts.

If this was trust property, it is not claimed that any one of the many vendees of parts of this tract ever knew of the deed declaratory of the trust until after it was recorded in 1870. The evidence does not disclose that any one of the various purchasers or of the sects to which the Lamoni congregation and appellants belong knew of it before that time.

Conceding for the moment that it was bought with church funds; that those buying the tract and parts of it knew this, then they are simply charged with notice that there was a resulting trust which the cestui que trust might or might not enforce. It is true that all are presumed to know the law; but it is the law based on facts known, not on facts unknown.

The most that can be claimed by respondent upon the facts is that for 38 years this real estate was known to be impressed with a resulting trust, with no one seeking to enforce it.

We claim the law to be that if one has a resulting trust in land, he must proceed, if he does not labor under some disability, to enforce that trust within ten years after he learns of the trust.

"The party who makes this appeal should set forth in his bill specifically what were the impediments to an earlier prosecution of his claim; how he

came to be so long ignorant of his rights and the means used by respondents to fraudulently keep him in ignorance; and how and when he first came to a knowledge of the matters alleged in his bill; otherwise the chancellor may justly refuse to consider his case, on his own showing, without inquiring whether there is a demurrer or formal plea of the statutes of limitations contained in the answer.

Badger v. Badger, 2 Wall. 95.

In Prevost v. Gratz, 6 Wheat. (p. 504), a suit to establish a trust, Judge Story says: "We think, therefore, that the true and safe course is to abide by the rule of law, which after a lapse of time, will presume payment of a debt, surrender of a deed and extinguishment of a trust, where circumstances can reasonably justify it. The doctrine in Hillary v. Waller (12 Ves. 261, 266) on this subject meets our entire approbation. It is there said that general presumptions are raised by the law, upon the subjects of which there is no record or written instrument, not because there are the means of belief or disbelief, but because mankind judging of matters of antiquity from the infirmity and necessity of their situation, must, for the preservation of their property and rights, have recourse to some general principle to take the place of individual and specific belief, which can hold only as to matters within our own time upon which a conclusion can be formed from particular and individual knowledge."

In King v. Pardee, 96 U. S. 90, the court below held that the deed to D did not create the trust; that it grew out of the relation of the parties; that D was the legal owner, with an equitable right in the heirs of T to require him to convey. The judge below said: "Such rights do not live forever. If they are not asserted within a reasonable time they die, and generally what is a reasonable time is determined in analogy to the statute of limitations. If it be an im-

plied equitable right to land, ordinarily it cannot be enforced after twenty-one years."

The judgment was affirmed, the court adopting the decisions of Pa., which hold that "a resulting trust, resting on parole, is to be regarded as extinguished after a lapse of twenty-one years." The court quotes also as follows: "As they claimed title to the land against the express language of the deed, they were bound to show, by clear and satisfactory evidence, that there was a resulting trust in favor of Sparks, and that he had taken such possession of the land and exercised such exclusive acts of ownership over it, within 21 years from the time the trust arose as would prevent its extinguishment."

In Hovenden v. Lord Annesley, 2 Sch. & Lef. Rep. 636 (A. D. 1806), Lord Redesdale says: "On the contrary, I think the rule has been so laid down that every new right of action in equity that accrues to the party, whatever it may be, must be acted upon at the utmost within 21 years."

In Smith v. Ricords, Administrator, 52 Mo. 582, the court says: "But in implied trusts, which grow out of the facts and circumstances of each case, the statute commences to run as soon as the party has a right to commence a suit to declare and enforce a trust (see Keetons' Heirs v. Keetons, Admr., 20 Mo. 530). The case under review is one of this character. It is an implied trust, which the plaintiff had the right to declare and enforce as soon as the first judgment was rendered in 1857. The fact of his absence in California did not stop the running of the statute of limitations. As it has been more than ten years since this cause of action accrued, it is unnecessary to decide whether 5 or 10 years is the proper bar under the general statute."

Wells v. Perry, 62 Mo. 573.
Hughes v. Littrell, 75 Mo. 573.
Hunter v. Hunter, 50 Mo. 451.
Buren v. Buren, 79 Mo. 542.

VI.

LACHES.

In Lemoinev v. Dunklin Co., 10 U. S. Appeals, this court says: "Laches is imputed indepedently of the statute of limitations. Courts of equity apply the doctrine on principles of their own, and time is only one of the circumstances to be considered in its application. It is settled, says the Supreme Court, 'that laches is not like limitation a mere mater of time, but principally a question of the inequity of permitting the claim to be enforced—an inequity founded upon some change in the condition or relation of the property or the parties.' Galliher v. Cadwell, 145 U. S. 368, 373; Godden v. Kimmell, 99 U. S. 201; Mackall v. Casilear, 137 U. S. 566. Referring to this doctrine, Mr. Justice Brewer, in delivering the opinion of this court in Naddo v. Bardon, 4 U. S. App. 642, 681, said: "No doctrine is so wholesome when wisely administered as that of laches. It prevents the resurrection of stale titles and forbids the spying out from the records of ancient and abandoned rights. It required of every owner that he take care of his property, and of every claimant that he make known his claims. It gives to the actual and long possessor security, and induces and justifies him in all efforts to make valuable the property he holds. It is a doctrine received with favor, because its proper application works out justice and equity, and often bars the holder of a mere technical right, which he has abandoned for years, from enforcing it when its enforcement will work large injury to many.' The lapse of time which will induce a court to apply the doctrine may be longer or shorter, depending upon the circumstnces of the particular case. Among the circumstances which will induce its application in a comparatively brief period are the changed condition of the property, particularly in respect to its value, and the number of innocent parties to be injuriously affected (Twin-Lick Oil Company v. Marbury, 91 U. S.

587; Felix v. Patrick, 145 U. S. 317; Galliher v. Cadwell, supra; St. Paul, Stillwater and Taylor's Falls Railroad Company v. Sage, 4 U. S. App. 160; Naddo v. Bardon, supra); the death of the parties; the death or removal of witnesses; and the loss or destruction of public records or other muniments of title. Nearly all of these circumstances are present in this case. Upon the authorities and the circumstances of this case the appellant was barred by laches many years before this suit was instituted. Relief has been denied on the ground of laches where the delay was only two years (Holgate v. Eaton, 116 U. S. 33; Society v. Millikem, 135 U. S. 304); where it was for four years (Twin-Lick Oil Company v. Mabury, supra; Hayward v. National Bank, 96 U. S. 611; Credit Company (limited) of London, England, v. Arkansas Central R. R. Co., 15 Fed. Rep. 46); where it was five years (Harwood v. Railroad Company, 17 Wall. 78; Davison v. Davis, 125 U. S. 90);where it was six years (Galliher v. Cadwell, supra); where it was seven years (Brown v. County of Buena Vista, 95 U. S. 157); where it was ten years, and the suit was grounded on an express trust (Naddo v. Bardon, supra); where it was fourteen years (St. Paul, Stillwater and Taylor's Falls Railroad Company v. Sage, supra); and where it was twenty-eight years (Felix v. Patrick, supra). The list of cases might be multiplied indefinitely. They embrace all kinds of obligations and property rights, and turn upon facts as varied as the transactions of men. It is not necessary to look beyond the decisions of this court for authorities to support the proposition that the complainant, if he ever had any rights, has long since lost them by the laches of himself and those under whom he claims."

In Missouri ten years possession of realty gives title. Under Sec. 6774, Chap. 103, R. S. Mo., head, "What actions shall be commenced within ten years," we find, "third, actions for relief, not herein otherwise provided for."

Sec. 6775, What within five years, "First, all ac-

tions upon contracts, obligations or liabilities, express or implied, except those mentioned * * * wherein a different time is herein limited."

The lots sued for are a part of a 63 acre tract; if one foot of that ground is trust property, the whole of it is. If Partridge bought it with trust funds and for trust purposes, a resulting trust arose the very day it was deeded to him, Dec. 19, 1831. Nearly 59 years afterward this suit was brought. It is claimed Partridge executed a deed declatory of the trust, in 1839. There was a delay of 31 years, lacking a few days, in the recording of it. After it was recorded there was a delay of over 21 years before an effort was made to enforce it.

For 38 years the records told the world that the 63 acre tract was owned by Partridge, his heirs and their vendees. Partridge paid for this tract $150. On May 5, 1848, the widow and heirs of Partridge, reciting themselves as such, for a consideration of $300, did "give, grant, bargain, sell, confirm and quit claim" this tract to Pool. This was recorded June 16, 1848. Pool sold it August 3, 1848, for $600, and the deed was recorded the same day; from that day on sheriffs' deeds, warranty deeds, plats, &c., were executed for all or parts of this tract, and taxes were paid; part of it was fenced by a party claiming in hostility to the alleged trust, more than forty years prior to the suit, and the tract was covered with homes before this suit was begun. The nature of these transfers imputed an adverse and not a fiduciary ownership (Halsey v. Tate, 52 Pa. 314). Partridge, Pool, Woodson and Maxwell are all dead. What excuse does the bill show for this great neglect? It does not even atempt one. It is true that the learned judge does in his opinion. It is as follows:

"The delay in bringing this action is not inexcusable. The beneficiaries of the trust were driven from the State in 1838-9 by military force and were not permitted to return to the State. A public hostile feeling and sentiment were excited against them,

which would have blazed up from the slumbering fires at any time thereafter prior to the Civil War, had they returned here and attempted to occupy this property. No one better knew this than the respondents when they laid hands to this property. The complainants were not here to "stand by" while parties were giving and receiving deeds to this property. No improvements were made on, and no visible possession taken of, the Temple Lot until 1882, within ten years of the institution of this suit, and when the trust deed had been of record twelve years. Up to this hostile action of respondents, the complainants had a right to assume that the trust character of this property was intact and that the lot was open for their entry at any time when the auspicious hour came to build on it."

Does this mean that up to the civil war the character of the courts in Missouri was such that some could not assert their rights? This court cannot assume this to be true without proof. We do not believe the judge meant to say so. If not, then the excuse is worth nothing. But he concedes that since 1861 they could have asserted their rights if they had any. Why, then, the further delay of 30 years?

The opinion says: "The writer of this opinion sought unsuccessfully as counsel in Sappington v. Oechsli et al., 49 Mo. 244, to have this court, on general principles of equity as to third parties giving credit to the ostensible owner of the fee on the faith thereof, hold that a deed should be recorded at least within a reasonable time." The learned judge must have drawn on his recollection as to that opinion. It does not lay down any such doctrine. The decisions of the Supreme Court of Missouri have always held to the contrary (Bowman v. Lee, 48 Mo. 336). Even going so far as to hold that a deed of heirs will cut out an unrecorded deed of the ancestor.

Bailey v. Winn, 101 Mo. 360.

It is difficult to see how it could be otherwise, because the statute in terms says it shall not be valid, except between the parties, and excepting those having "actual notice," "until the same shall be deposited with the recorder for record." R. S., Chap. 40, Sec. 2420.

And "a purchaser for value by quit claim deed is as much within the protection of the registry act as one who becomes a purchaser by 'warranty deed.'"

Munson v. Enson, 94 Mo. 509, and cases cited in opinion.

The foreclosure of a tax bill for street improvements, by suit against the apparent owner of record, will give good title as against the real owner who has neglected to record his deed.

Payne v. Lott, 90 Mo. 680, and cases cited in opinion.

Sappington v. Ochsli, was an attachment suit, and it was sought to make a levy superior to an unrecorded deed, and the court refused to so hold. This is the law also as to the lien of judgments. But if a sale is made before the deed is recorded the purchaser will get the title.

Valentine v. Havener, 20 Mo. 133.
Reod v. Ownby, 44 Mo. 204.

VII.

RESULTING TRUSTS.

It was said in Adams v. Burns, 96 Mo. 361, "These resulting trusts must not be declared upon doubtful evidence or even upon a mere preponderance of evidence. There should be no room for a reasonable doubt as to the facts relied upon to establish the trust. This is the rule declared in the case of Johnson v. Quarles, 46 Mo. 424, and it has been again and again approved in subsequent cases."

In King v. Isely, 116 Mo. 158, the court said: "A vast amount of evidence was taken at the trial. * * * The plaintiffs undertook to establish the alleged trust by parole evidence of the weakest character, the casual statements of the defendant and of King, in the main uncertain and equivocal, testified to by witnesses (many of them interested) years after the conversations were had, in which they are said to have been made. In regard to the character of the parole evidence necessary to create a resulting trust, such as is contended for here, this court has ever held no uncertain language."

In Olcutt v. Bynum, 17 Wall. 59, the court says: "Where purchase money is all paid by one and the property is conveyed to another, there is a resulting trust in favor of the party paying unless there be something which takes the case out of the operation of the general rule. But where he furnishes only a part of the amount paid, no trust arises, unless his part is some definite portion of the whole and is paid for some aliquot part of the property, as a quarter, a third, or a moiety. There must be no uncertainty as to the proportion of the property to which the trust extends; * * * such a trust must arise, if at all, at the time the purchase is made. The funds must then be advanced and invested. It cannot be created by after advances or funds subsequently furnished. It does not arise upon subsequent payments under a contract by another to purchase."

VIII.

NOTICE.

In Drey v. Doyle, 99 Mo. 469, the cases in Missouri on this subject, as applied to real estate, are reviewed, and the court says: "We are cited to cases which hold that possession is 'constructive' notice to the subsequent purchaser of the title, under which the person in possession claims. But, placing no stress upon the different wording of the statutes in some of these cases, they are not in accord with the rulings of this court. The recording act is based upon a principle of sound policy, and ought not to be frittered away by new departures. The old ones go quite far enough. The recording act is designed to protect persons who act in good faith, and ought not to be made the means of committing a fraud. If the subsequent purchaser is conscious of having the means of knowledge of an adverse claim and does not use these means of information, he ought to be charged with such information as a fair and reasonable pursuit of them would have disclosed. He may not shut his eyes to circumstances which would put a prudent person upon inquiry.

In Williams v. Jackson, 107 U. S. 484, it is held as follows: "To charge Williams with constructive notice of the fact that the notes had not been paid, in the absence of any proof of knowledge, fraud, or gross or willful negligence on his part, would be inconsistent with the purpose of the registry laws, with the well-settled principles of equity, and with the convenient transaction of business (citing cases).

"The equity of Williams being at least equal with that of the plaintiffs, the legal title held for Williams must prevail and he is entitled to privity."

Of course it will not be contended that parties buying this tract or parts of it had any notice of the mysterious deed filed for record by the unknown in 1870.

Up to that date it can only be claimed that these purchasers had notice of the resulting trust as claimed. How can these purchasers be said to have been "conscious of having the means of knowledge of an adverse claim," when the evidence is not clear and strong enough to make out the claim?

The opinion says (p. 696): "Its public dedication as such, by Joseph Smith, the founder, prophet and seer of the church, was itself an event so noteworthy that it is incredible it should not have been known and been long the subject of common talk in the community."

Therefore if it seems incredible to a trial judge that purchasers did not know what was said in their absence by a man while upon a piece of vacant ground, then this will be equivalent to proof that they were actually present and heard it. If this be so, their land titles are very insecure.

The opinion further says (p. 696): "And the circumstances detailed by Emily, the daughter of Partridge, under which the deed was executed to Poole, carry persuasive evidence to my mind that he knew he was after acquiring this property covertly, and that he was really acting in the matter in the interest of Maxwell, to whom he at once conveyed." There is no evidence that Poole was acting for Maxwell, and even if there was, it would not affect this case. The heirs of Partridge sold this land, which cost their father $130 to Poole for $300. The deed is dated May 5, 1848, and was recorded June 16. Poole sold to Maxwell by warranty deed dated Aug. 3, 1848, for $600.

Emily says p. 210) that she had no positive knowledge that this was church property, but suposed it was; that she can remember nothing as to what was said when they sold this tract to Poole.

The opinion says (p. 696): "The name Temple Lot has adhered to this piece of property, on one of the principal thoroughfares of the City of Independence through all these years."

This, in reality, is all the evidence there is whereby complainant seeks to prove notice. A piece of ground of unknown area in a 63 acre tract of land, known as Temple Lot, for more than sixty years; no one claiming to own it or building upon it, or paying taxes, except those under whom appellants claim. There was a rumor that a temple was to be built upon it. When? The opinion answers this correctly (p. 687), "in the fullness of time and the fulfillment of prophecy."

The opinion declares (p. 698) that an Israelite cannot buy land in Jerusalem, except with notice of matters prior to the time when Christ was on this earth. It may be that this is the law as to the decayed civilization round about Jerusalem, but it does not apply to this country. Can it be true that a 63 acre tract in the heart of a city must lie vacant, with no one to pay taxes, to use, or even to claim it for 2000 years because of stuff out of which dreams are made?

On the contrary each buyer was right in assuming that such a condition of things was contrary to public policy.

We call attention also to the fact that there was no Mormon among the various purchasers until it came to Hedrick, trustee for appellants.

The opinion taunts these appellants (p. 705) by saying, after calling them "squatter sovereigns," "they deny in their answer that this property was ever bought for the church or impressed with a trust therefor, and yet when their head men were on the witness stand they swore they are a part and parcel of the original church, founded and inspired by Joseph Smith, the martyr, and that today they hold the property in question for that church."

It is literally true that they claim to be the original church while the deed to Hedrick was for the purposes of their congregation, and yet it is also true that they bought it and paid full value.

The Iowa church also claim to be the original

church and in some inscrutable way they claim through Beardslee, who bought this land long after the trustee of appellants had bought it and put their title on record.

Hedrick got title to lots 16, 20 and 21 of record before the Partridge deed to Cowdrey heirs was filed for record in 1870.

IX.

APPELLANT TRUSTEE AN INNOCENT PURCHASER.

The opinion says (p. 693): "To constitute an innocent purchaser in such case it is not sufficient that it should appear that a deed was executed, but proof must go farther and show affirmatively that a valuable consideration was paid, and that, too, before the prior deed was placed on record."

Even under this rule appellant trustee is an innocent purchaser.

It is true that appellants did not go into an investigation of the sums paid in the many transfers. Yet two of the deeds, the one to Pool from the Partridge heirs, and the one by the sheriff to Maxwell, under a judgment against Pool, are ancient deeds.

Where deeds are more than 30 years old they are termed ancient instruments and are said to prove themselves. 1 Greenl. Evd., Sec. 21; see also note A, Sec. 141. This rule grows out of the necessity of the case. It will be presumed, until shown to the contrary, not only that the deed was executed, but also that the necessary recitals are prima facie true.

Wynne v. Tyrnhill, 4 Barn. & Ald. 376.
McReynolds v. Longenberger, 57 Pa. 13.

Again, it is a rule of law, well settled, that it will be presumed that an officer has done his duty.

Under this rule, in McCoy v. Cassidy, 96 Mo. 429, a seal was presumed to have been upon a sheriff's deed, although the record of it disclosed none. This entire tract was sold under a judgment against Pool and the deed, dated March 24, 1849, recites that it was sold for $1,315, and that the sum was paid to the sheriff by Maxwell, the purchaser.

Each one of these lots was sold by the sheriff under a decree in partition, each deed reciting the receipt of the purchase money by the officer. In all these sales it was the duty of the officer to collect the money before making a deed. All of these lots were afterwards obtained through warranty deeds, except one, which was bought at administration sale. The opinion intimates that appellants as well as Hedrick ought to be held to have had notice because they are Mormons. This we do not admit, yet even if they had actual notice they can protect themselves under their purchase, if any one one of those through whom they claim was a purchaser for value without notice.

Drey v. Doyle, 99 Mo. 459.

X.

RULINGS OF THE COURT UPON THE DOCUMENTARY EVIDENCE.

It seems incredible that the court should have excluded the deed by the Partridge heirs to Pool, offered by appellants. This deed was dated May 5, and recorded June 16th, 1848; it was broadly declared by the amended bill to exist; not satisfied with this, complainant proved its execution; it was an ancient deed and proved itself; those claiming under it had been in possession of parts of the tract for more than 30 years; and finally, no matter how defectively acknowledged, having been so long recorded, it was evidence. The statute of Missouri settles this. It

is quoted as well as construed in Hoge v. Hubb, 94 Mo. 497, where the court says: "The objection taken to the quitclaim deed of 1871, because of not being properly acknowledged, is not well taken by reason of the provisions of section 2310, Revised Statutes, 1879, declaring that, 'any writing, instrument or deed, purporting to affect any real estate, or any right or interest in or to the same, and such real estate, right, or interest in or to the same, shall have been claimed or enjoyed by any person, by or through such writing, instrument or deed, for a period of ten consecutive years, such writing, instrument or deed, and a certified copy thereof, and of the time of its record, shall be prima facie evidence of the execution of such writing, instrument or deed, and of its genuineness, and time of record; provided, that said record thereof shall have been made at least ten years next before such writing, instrument or deed, or certified copy thereof, is offered in evidence.' For this reason, the deed of 1871 was properly admitted in evidence."

There can be no question but that persons took possession of parts of this tract before the war, and various additions have been covered with buildings since that time. This suit was heard February 6, 1894, and these appellants fenced their lots in 1882. (Opinion, p. 694). So even appellants had actual possession for ten years prior to the time they offered said deed in evidence. The statute is not that the deed shall have been recorded ten years prior to the suit, but prior to the time the instrument or a copy is offered in evidence.

The copy of the deed was excluded, 1st, because it did not appear that the original was not in appellant's possession. But it was expressly admitted by respondents' counsel that this was the fact when the copy was offered (p. 546). And 2nd, because the certificate of the officer taking the acknowledgment was not under the seal of the court. The statute of 1845 seems to have required a seal when there was one, but if there was none, then to state that fact was suf-

ficient. This was a provision for the condition of things in early times.

Sec. 17, R. S. of Missouri, 1845: "The proof of acknowledgment of every instrument or conveyance in writing, affecting any real estate in law or equity, shall be taken by some one of the following courts or officers: First, if acknowledged or proved within this State, by some court having a seal, or some judge, justice or clerk thereof."

Sec. 19 as to the certificate of acknowledgment is, "First, when granted by a court, under the seal of the court. Second, when granted by the clerk of the court, under the hand of the clerk and seal of the court to which he is clerk. Third, when granted by an officer who has a seal of office, under the hand and official seal of such office. Fourth, when granted by an officer who has no seal of office, under the hand of such officer.

The certificate to this deed (p. 547) is very formal. It was by a clerk of a Circuit Court in Missouri. It closes in this way: "In testimony whereof I have hereunto set my hand and affixed my private seal (there being no seal of court provided), at office, the day and year last aforesaid. A. A. Bradford, Clerk."

The court held that although there was no seal of the court, yet the clerk was not an officer "who has no seal of office."

And this ruling, too, was made in the face of decisions which hold that the statute in reference to these certificates should be liberally construed in order to sustain them.

Choteau v. Allen, 70 Mo. 290.
Wilcox v. Osborn, 77 Mo. 626.
Eppwright v. Nickerson, 78 Mo. 482.
Addis v. Grahan, 88 Mo. 201.

The judge, however, does not indicate that there was anything wrong with the deed of Partridge to Cowdery heirs (p. 274) read by complainant, yet this was acknowledged before a justice of a County Court,

the certificate ending in this way: "In testimony whereof, I have hereunto set my hand and affixed my private seal, on the day and year above written. Elias Higbee, J. C. C. C."

We claim that the court erred in giving any weight to this Cowdery deed. A copy was introduced. The deed has no date; it purports to have been acknowledged March 25, 1839; it was not filed for record for more than thirty years; who had it all this time no one knows; who filed it for record cannot be learned, although Bishop Kelly says he has made diligent inquiry to find out (p. 273). It got upon record shortly after the deeds to Hedrick trustee were put upon record; the whole affair is shrouded in mystery. Not only this, but the keeping it from record, with no trace of the keeper, is very suspicious; is contrary to business methods, common experience and public policy. The fact that the instrument, after record, went back to the obscurity from which, for the moment, it emerged, is doubly suspicious. Judge Philips says (p. 696): "Courts will take notice of matters of public history. They will also admit for the purpose of notice a matter of local history." It is a matter of general notoriety that the manufacture of forged deeds assumed the dignity of an industry at one time in this Western country. It was so extensive that it caused in 1883 (R. S. of Missouri, p. 1727) a law to be passed requiring deeds to be kept by the recorder for a year, "subject to the inspection of all parties interested," when there was a delay of one year in filing for record.

The judge seeks to evade the force of all this by saying (p. 690): "The law always presumes that a public officer does his duty. It is therefore to be presumed that the Recorder of Jackson County, in admitting the deed to record, inspected it and was satisfied of its original character." The principle of law is correct, but its application is fallacious, for the law did not make it the duty of the recorder to pass upon the genuineness of signatures to instruments

filed for record. If they were entitled under the law to be recorded, and were formal, he must record them. It would not seem probable that the recorder in 1870 would know a signature affixed over thirty years before. Again, there is not the slightest evidence of the delivery of this deed. Partridge died long prior to 1870.

The law of delivery is declared in White v. Pollock, 117 Mo., 472, as follows: "Delivery of deed is, of course, an essential element of a valid transfer of title to real estate, and it must take place during the life of the grantor; for a deed cannot be made to perform the functions of a will. But the delivery need not be to the grantee in person. A deed delivered by the grantor to a third person to be delivered to the grantee, and by such third person delivered to the grantee, will constitute a good delivery, though the grantor is dead at the date of the last delivery; for the delivery takes effect by relation as to the date when first made to the third person. In such cases it should appear that the grantor parted with all dominion and control over the instrument, intending it to take effect and pass title as a present transfer. This intention may be manifested by acts or by words, or by both words and acts."

This is not an instrument declaratory of a trust simply; it is, if it is as claimed, a deed conveying the legal title to the Cowdery heirs in trust.

It is true that this is an ancient deed; and it is true, we think, although there are many cases to the contrary, that one who relies on this kind of a deed need not have actually held possession under it, but it is also true that in order for such a deed to have any weight, it must not be surrounded with suspicious circumstances, and it must be shown, either that possession has been held for a long time under it, or else that it came from the custody of those legally entitled to it.

Harlan v. Howard, 79 Ky. 376.
1 Greenl. Evd. Secs. 142 and 143.

The opinion says (p. 688): "As both parties claim under Edward Partridge, both are precluded from invoking any other source of title." This is not the law in Missouri. One can claim, as a general rule, from as many sources as he pleases.

Crumb v. Wright, 97 Mo. 19.

The judge may have meant to have said that if the parties claim from a common source "In such cases the rule is that the party plaintiff in an action of ejectment, need not go further and show that the common grantor held the legal title."

Charles v. Patch, 87 Mo. 463.

This error, however, was harmless.

XI.

THE DEED OF PARTRIDGE TO THE COWDERY CHILDREN.

No land is described except in general terms: he conveys for $1,000 to him in hand paid. He states that funds were put into his hands to enter lands, and that with them he had entered them. "I do for the sum of * * give, grant, bargain and sell to * * all the lands entered in my name in the county of Jackson. * * Said Edward Partridge,the first party and signer of the deed, does also sell, alien * * all real estate and lands he has both entered as aforesaid, and all he owns in his own name by private purchase and holds by deed of gift, being intended for the use of the Church of Latter Day Saints or otherwise. This sale is to embrace all lots of all sizes situated in Independence, and to embrace the lot known as Temple Lot."

The words "or otherwise" mean that there are

two kinds of land conveyed, those held in trust and those belonging to him. Some for trust purposes and some otherwise, i. e. some not for that purpose.

The deed is inartificially drawn; yet it seems to refer to three classes of land: 1. That entered with trust funds. 2. That which he owns "in his own name"—of course it was all in his own name—i. e. his own, belonging to him, by private purchase—i. e. with his private funds. 3. Lands conveyed to him as gifts for the church.

From the evidence of Dr. Johnson (and the language of the deed indicates it) it appears that Partridge owned a large quantity of land. Partridge did not enter the 63 acre tract.

It is true that he does refer to Temple Lot, and says it is to be included in the transfer. But there was no such lot; it was a piece of ground to be carved out of the 63 acre tract. No two could guess alike as to its size; as to what its frontage or its depth would be. This would depend upon the size of the temple which was to be built in "the fullness of time," which in turn would depend upon the imagination of the guesser. Those who represent the complainant, with all their thought and care, had to add another lot at the hearing. A deed for Temple Lot would be void.

Jennings v. Brizladine, 44 Mo. 332.
Hulme v. Strautman, 35 Mo. 293.
Schneider v. Osten, 50 Mo. 513.

Parol evidence is admissible to locate the lot, but not to create it. It must identify the lot as existing on the ground.

XII.

A CHURCH CONGREGATION INCORPORATED IN ANOTHER STATE CANNOT OWN LAND IN THIS.

"That no religious corporation can be established in this state except such as may be created under a general law, for the purpose only of holding the title to such real estate as may be prescribed by law for church edifices, parsonages and cemeteries." Art. 2, Sec. 8, Const. Mo.

Art. 10, Chap. 42, R. S. Mo., is entitled "Benevolent, Religious, Scientific, Fraternal—Beneficial, Educational and Miscellaneous Associations.

Sec. 2825, "What associations may incorporate. * * Any association, congregation, society or church organization formed for religious purposes and any association formed to provide or maintain a cemetery."

The statute provides that not less than three persons may be incorporated, and that the officers "shall submit to the Circuit Court having jurisdiction in the city or county where such association is located, the Articles of Agreement with a petition praying for a pro forma decree therein." It is made the duty of the court to see that the purposes of the association "come properly within the purview of this article and are not inconsistent with the constitution or laws of the United States or of this state."

The opinion says (p. 683): "The broad proposition is asserted that a foreign corporation has no right, under the laws of Missouri to hold or own real estate in the state." We neither make nor could make such a claim. We limit this claim to a religious congregation incorporated in another state. The opinion says (p. 685): "I understand the law of comity to be well established that a corporation of one state, if not forbidden by its charter, may exert its powers in any

other state of the Union, so as to take and hold real estate therein unless interdicted by the positive law or declared policy of such other state."

What the court means by this Lamoni religious congregation, incorporated, exerting its powers in Missouri, it is difficult to say. This law of comity is considered in the leading case of Bank of Augusta, 13 Pet. 587.

The court says: "And it may be safely assumed that a corporation can make no contracts and do no acts, either within or without the state which creates it, except such as are authorized by its charter; and those acts must also be done by such officers or agents and in such manner as the charter authorizes. And if the law creating a corporation does not by the true construction of the words used in the charter, give it the right to use its powers beyond the limits of the state, all contracts made by it in other states would be void.

"It is very true that a corporation can have no legal existence out of the boundaries of the sovereignty by which it is created. * * It is indeed a mere artificial being, invisible and intangible; yet it is a person for certain purposes in contemplation of law, and has been recognized as such by the decisions of this court. * * Now, natural persons through the intervention of agents are continually making contracts in countries in which they do not reside; and where they are not personally present when the contract is made, and nobody has ever doubted the validity of those agreements. And what greater objection can there be to the capacity of an artificial person, by its agents, to make a contract within the scope of its limited powers, in a sovereignty in which it does not reside, provided such contracts are permitted to be made by them by the laws of the place?

The corporation must no doubt show that the law of its creation gave it authority to make such contracts through such agents. * * Every power, however, of the description of which we are speaking,

which a corporation exercises in another state, depends for its validity upon the laws of the sovereignty in which it is exercised, and a corporation can make no valid contract without their sanction, express or implied. * * The comity thus extended to other nations is no impeachment of sovereignty. It is the voluntary act of the nation by which it is offered, and is inadmissible when contrary to its policy or prejudicial to its interests."

To begin with, is it clear that it is "within the scope of its limited powers" for the officers of this Lamoni congregation to incur debts for costs and attorney fees, in trying to capture lands in Missouri which it does not need and cannot use, to pay which this congregation might sacrifice its place of worship? On the contrary it is clear that no such power, express or implied, is sanctioned by the laws of Iowa.

The section quoted from the Missouri Constitution means that no foreign church corporation shall own land in this state. It denies incorporation to religious corporations, except to hold land "for church edifices, parsonages and cemeteries." Unless they own land they have no need for incorporation and cannot incorporate, and when incorporated it must be by general law.

From this provision, is it not evident that it is contrary not only "to the policy," but to the laws of the State, to allow foreign religious corporations to own land here?

When it says these corporations can only be created by general law, it refers to the general law of this state; when it says they can be created only for the purpose of holding title to real estate for certain purposes, it means title to lands here. These corporations are to be within the jurisdiction of the courts of this state, so that the charters the state gave can be taken away for violation of this provision of the constitution.

It is a matter of history that the church has at times held vast quantities of land not necessary for

church uses, to give it power and revenue. It has always been the policy of this state to prevent this.

Foreign religious corporations, unlike business ones, have no right to demand either on the ground of comity or for any other reason, that they be allowed to own ground here, for there is neither reason nor necessity for it. If those incorporated into such a corporation have no followers in this state, they cannot need lands for churches, parsonages or cemeteries. To come here seeking land under such circumstances, would be to come here with the intent to violate the constitution of the state. If there are those here who believe, as those who organized the foreign corporation, let them incorporate—three only are needed The constitution restricts even business corporations as to its ownership of land.

Sec. 7, Art. 12, Constitution. "No corporation shall engage in business other than that expressly authorized in its charter or the law under which it may have been or hereafter may be organized, nor shall it hold any real estate for any period longer than six years, except such as may be necessary and proper for carrying on its legitimate business."

Suppose a great religious order, e. g. the Methodist, for some reason, should desire to acquire more land in this state than its corporations here could acquire under the law, could it do so by having each one of its vast number of corporations in the rest of the states, buy land here?

Or suppose, for example, that for some reason the laws of New Mexico were such that the Catholic church should deem it best that one church incorporated there should take title to lands owned by all its congregations in the United States.

The fallacy of the claim that a religious congregation, incorporated in one state can hold land in half a dozen others is strongly illustrated by the case of Evenson et al. v. Ellingson, 67 Wis. 634. There, two religious congregations in the same state, nine miles apart, each having a church, attempted to incorpo-

rate in one corporation. The court held they could not. That such a thing was not only contrary to public policy, but was not within the statute.

The court says (p. 642): "We do not think that our statutes authorize such a corporation. If a religious corporation may be formed over two separate churches and congregations, it might be formed over fifty or one hundred, or by and over all the churches in the state, and the trustees of one corporation may govern all their temporal affairs. The large churches and congregations might elect a majority of such trustees and the officers of the corporation, and might thereby crush out and destroy the weaker churches utterly, and take away their property. Besides the place of meeting of such a mammoth corporation to elect trustees, or to do any other corporate business, would be distant from and inconvenient to most of the churches and congregations. The danger arising from schism and disagreements which would keep the churches always embroiled and troubled, and many other evils would attend such a corporation. Such a corporation would be contrary to the policy of our institutions, which is that the affairs of our civil and political bodies corporate shall be transacted near the people, and their meetings held in places easily accessible to the people and electors, and that such bodies shall not embrace more territory than necessary, so that the people shall not be subject to foreign tribunals and shall be able to enjoy their liberties and discharge their duties near their homes. Those are some reasons why the legislature most probably did not intend to pass any statute authorizing such religious corporations, but of course this is not conclusive against the incorporation of many churches and congregations, however numerous and distant from each other they may be, by one certificate or charter, if such is the law."

The court then discusses the statute to show that it does not allow such incorporation.

"There is not a single clause or word of our statutes that can possibly be tortured into any reference to the formation of a corporation over more than one single church, and corporations can exist only by authority and sanction of the law. It is most remarkable that any one should have ever conceived the idea that more than one church or religious society could be embraced in one corporation. What is the policy of our statutes in this respect is the policy of all statutes and laws in this country, and always has been since the formation of our government (citing cases). The separate and distinctive character of two parishes or churches is shown in Peckham v. North Parish, 16 Pick. 274, where it is held that two parishes cannot even employ a common minister by a joint contract unless they worship together. I do not think another case can be found in this country where it is even claimed that one corporation embraced more than one church or religious society. * * The evils and troubles of these two Christian churches are traceable to this assumed right of organization of one corporation to embrace both; and a corporation embracing many churches with a board of trustees apportioned according to the number of electors or members of the several churches will necessarily be fraught with such evils. The weaker churches would have to go the wall or submit to the control of the stronger one, in all their temporal affairs at least, and interference with their temporal affairs would be justified or excused by the pretext of unsoundness of doctrine or departure from some usage of the church catholic."

Judge Philips seems to think that this is a question that can only be raised by the state in a proceeding for that purpose, citing National Bank v. Matthews, 98 U. S. 621.

But there is a great difference between a suit where the corporation has the title and one where it is seeking to get it.

No court, by its decree, will violate a statute.

In Case v. Kelley, 133 U. S. 28, the court says: "It is next objected to the principle adopted by the court that the limitation upon the power of the corporation to receive land is one which concerns the state alone and the title to such lands in a corporation can only be defeated by a proceeding in the nature of a quo warranto on behalf of the state. The case of National Bank v. Matthews, 98 U. S. 621, is strenuously relied on to support this view. We need not stop here to inquire whether this company can hold title to lands, which it is impliedly forbidden to do by its charter, because the case before us is not one in which the title to lands in question has ever been vested in the railroad company, or attempted to be so vested. The railroad company is plaintiff in this action and is seeking to obtain the title to such lands. It has no authority by the statute to receive such title and to own such lands, and the question here is, not whether the courts would deprive it of such lands if they had been conveyed to it, but whether they will aid it to violate the law and obtain a title which it has no power to hold. We think the questions are very different ones, and that while a court might hesitate to declare the title to lands received already and in possession and ownership of the company void on the principle that they had no authority to take such lands, it is very clear that it will not make itself the active agent in behalf of the company in violating the law and enabling the company to do that which the law forbids."

U. S. v. Fox, 94 U. S. 315.

Christian Union v. Yount, 101 U. S. 352, so much relied on by respondents, was a suit by the heirs of a grantor to set aside a deed made by him to appellant for land in Illinois. Appellant was not a church, but a New York corporation, which had only one way to use the land, and that was to sell it and apply the proceds to the purposes for which it was incorporated.

XIII.

THE ALLEGATIONS OF THE BILL AS TO HERESY.

"It is undeniably a fundamental rule that every bill in equity must clearly shown on its face that the plaintiff is entitled to the relief demanded, or such an interest in the subject matter as clothes him with a right to institute and maintain a suit concerning it."

Carter v. Carter, 82 Va. 632.
I Dan ch. Pr. 314.

Story's Eq. Pldg. (9th Ed.) Sec. 241: "In the next place it may be affirmed as an elementary rule of the most extensive influence, that the bill should state the right, title or claim of the plaintiff with accuracy and clearness; and that it should, in like manner state the injury or grievance of which he complains and the relief which he asks of the court. In other words there must be such certainty in the averment of the title upon which the bill is founded that the defendant may be distinctly informed of the nature of the case which he is called upon to meet."

If there is a matter which should be stated more clearly than another, so as to give the defendant a chance to meet it, it is the charge of heresy.

The only charge stated is that appellants "deny the ordinance of baptism for the dead as taught by your orator and the Mother Church." As to the method of teaching or as to the mater taught, the bill is silent. The following charges nothing which can be met; that "all defendants deny that all articles adopted by your orator and its authorities after the year 1835 are true or binding, or in any way presents the articles of faith to the Church, and all defendants insist, contrary to the teachings of the Mother Church, that after the year 1834, Joseph Smith, who lost his life in 1844, was a fallen and false prophet, and his

teachings to be false and heretical. * * But your orator and defendants believe in the Bible and the Book of Mormon, while your orator and its members believe in and teach the Book of Doctrine and Covenants of the Church from its organization in the year 1830 to the present day, which is denied by defendants after the year 1834. * * * And in this as well as in many other matters, defendants are now, and from their organization, have been heretical and in opposition to the teachings, tenets and ordinances of the Mother Church, now represented by your orator."

XIV.

PRINCIPLES APPLIED TO RELIGIOUS CORPORATIONS.

We do not know how far the court will wish to investigate the law on this subject; we will refer to some principles which may be of service, should it see fit to do so.

In the leading case of Happy v. Morton, 33 Ill. 407, the court says: "No critical examination of the jurisdiction of courts of equity over charitable trusts is necessary to dispose of the present case, and only some well established general principles will be referred to. Courts of Equity will exert their powers to prevent a misuse or an abuse of charitable trusts, and especially those of a religious nature, by trustees, or by a majority of a society having possession of trust property; but in all cases the trust and the abuse of it must be clearly established in accordance with the rules by which the courts are governed in administering justice. If the alleged abuse is a departure from the tenets of the founders of a charity, their particular tenets must be stated, that it may appear from what tenets the alleged wrongdoers have departed. In like manner it must be stated in what the

alleged departure consists. Courts of equity do not interfere on account of inaccuracies of expression or inappropriate figures of speech, nor for departures from mathematical exactness in the language employed in inculcating the tenets of donors. There must be a real and substantial departure from the purposes of the trust, such an one as amounts to a perversion of it, to authorize the exercise of equitable jurisdiction in granting relief. Taking these well established rules as our guide, we are required to dismiss from our consideration a large portion of the voluminous record in this case. The original bill alleges that the property in question was purchased for the purpose and with the intention of erecting thereon a suitable building for the use of the society called the Church of Christ, in which to worship Almighty God, according to the teachings of the Christian or Reformed Church; but it does not allege what the teachings of the Christian or Reform Church were, nor in what particulars these teachings had been departed from.

It is true, the bill alleges that the society at Jacksonville from its original organization continued for a time in harmony and union with all the brotherhood of the Christian Church throughout the United States as to theological views and teachings and as to church government and discipline, but it does not allege what the theological views and teachings of the brotherhood throughout the United States were, nor any trust that the worship in the church at Jacksonville should continue in harmony and union with such views and teachings, nor in what particulars such views and teachings have been departed from. An elemental principle of pleading requires us to intend everything to have been lawful and consistent with the trust which is not expressly shown in the bill to have been unlawful or inconsistent with it. Foss v. Harbottle & Co., 2 Hare 502."

Ehrenfeldt's Appeal, 101 Pa. 186, was this: A Lutheran church of long standing was for many years

in the habit of sending delegates to a certain district synod, subject to the General Synod of the Lutheran Church. Its congregation never adopted any specific profession of faith; nor did it ever expressly acknowledge the authority of the Synod. A bill was filed by certain members of the congregation seeking to restrain the pastor from acting as such and from using the church property. It was held that the church had not always been independent in matter of doctrine; that it had not by sending delegates to the district synod, in any way recognized the authority of that synod or of the General Council, or adopted the distinctive doctrines taught by these bodies. That therefore the church was at liberty to elect a pastor holding any sort of doctrines distinctively Lutheran, and that the bill should be dismissed.

In Watkins v. Wilcox, 4 Hun. 226, the court says: "And I fully agree with the principle which seems to me to be established. In spite of written symbols, the beliefs of men have changed; and I look with no favor on a rule which would permit the past generations to appropriate property to the support of their beliefs, so permanently as to deprive the present of the use of such property, in case these old beliefs shall have passed away."

In McGinnis v. Watson, 41 Pa. 16, the judge writing the opinion shows at length how the Jewish, Roman Catholic and Protestant churches have changed their beliefs. He says, "In Craigdallie v. Aikman, 1 Dows Par. R. 1, Lord Eldon laid down the rule that a congregation's title depends upon its adherence to the opinions and principles in which it had originally united, and this has been followed and repeated in many cases. But we should grievously misapply this rule if we should interpret it as meaning that no congregation can change any material part of its principles or practices without forfeiting its property. This would be imposing a law upon all churches that is contrary to the very nature of all intellectual and spiritual life, for it would forbid both growth and

decay; not prevent, for that is impossible. The guaranty of freedom to religion forbids us to understand the rule in this way.

And history forbids it. Let us be indulged in so much detail, in the illustration of this, as is necessary to make the principle clear by means of the facts which it has produced. Many of the principles of human action depend so closely upon the peculiar development of a given people, that they are not susceptible of clear illustration, except by instances and cases drawn from the conduct, life and history of that people. But on the other hand, very many of them are so common to all humanity that any illustration of them must be inadequate that does not embrace a wide sphere of human conduct both in time and space. The principle is, that all intellectual or spiritual growth involves some change or development of opinions, principles and practices, and therefore some change in the systems which are constituted of those opinions, principles and practices; for these are the elements of systems and decide their character. And the fact is, that from the very origin of Christianity, such a change has been continually going on in the Christian church, in all its branches, congregations and members without producing a forfeiture of the property held even by those in which the change has been most decided. Changes in principles and practice are not incompatible with legitimate social succession, but are necessary to its normal progress. All denominations admit that all others must change in the progress towards union, even though they may suppose their own system too perfect to undergo any change."

In Watson v. Garvin, 54 Mo. 358 (1873), the Supreme Court of Missouri decides as follows: "It is not pretended that the property in dispute is held under any express condition of subordination by the cestui que trust to any church judiciary. So far as the conveyance is concerned, no one would know to which of the various branches of the Presbyterian

church this congregation belonged, or whether the name was not used with reference to its internal organization rather than its subordination. So, then, if we find the condition at all, it must arise from the fact that from the beginning it was a constituent of the General Assembly * * * (p. 366). "We have seen that in the Presbyterian church the General Assembly may cut off or dissolve presbyteries. But I have never known a case in any civil court, where it has been held that a resolution of a high ecclesiastical judiciary cutting off a lower one, whether by direct expulsion or continual dissolution like the ipso facto ordinance, operates as a confiscation of the property of the local congregation held for their own use with no special trust in case they do not withdraw from such exscinded body or that it operates as a transfer of such property to new organizations created under authority of exscinding power. It may be for the peace and good order of the church that such a power be lodged in the general representative body—of that we can know nothing—but to suppose that it carries with it the power to thus change the titles to all the property of the local congregations would give it a scope and effect hitherto undreamed of. Without citations or hearing, without even the form of judicial investigation, the General Assembly, assuming upon common fame the existence of certain local irregularities, as in 1837, or, desiring to punish the authors and adherents of a libelous and schismatical document, as in 1866, prompted, perhaps, by intelligent zeal or perhaps by heated blood, expels by name large subordinate judicatories or condemns in advance the action of certain clergymen and presbyteries, summons them by resolution to appear in the first instance before the appellate body; suspends them in the meantime, and dissolves any presbytery that shall admit them to a seat. This would seem to be a thorough medicine, though perhaps necessary to meet the disease. It has always been a disputed point between the adherents of different ecclesiastic-

al systems as to how much authority or whether any at all should be given to a central power. Upon ecclesiastical matters each must decide for itself. But no man or association of men can be deprived of property except by the law of the land. It is true that trusts pertaining to property held for ecclesiastical uses will be protected like other trusts and their proper administration enforced; but every presumption is in favor of the right of the local congregation to the continued use of property purchased and improved with its funds and held for its benefit, and that right will only be forfeited as a penalty for violating the conditions of the trust. That violation must be positive, affirmative action, and cannot be predicated upon a position into which the congregation is thrown against its will and by a summary exercise of power without judicial investigation. No person or presbytery, if such a thing may be, has been found guilty."

The nature of the incorporation of a religious congregation is stated in the leading case of St. Mary's Church, 7 Serg. & R. 548, thus: "The congregation was incorporated not in its ecclesiastical, but in its lay aspect; that it should continue to hold its tenets or be subject to the discipline of the church of Rome was no condition of the charter, express or implied. A congregation of any other sect could have had a charter as readily as this; stipulation for forms of doctrine or points of faith, were matters to which the Legislature was not a party and with which it had nothing to do. This congregation was incorporated like every other, to enable it to manage its temporal concerns to the best advantage. The establishing of a particular set of religious opinions by law, is contrary to the genius not only of our government, but of the age in which we live."

In the Dartmouth college case, 4 Wheat. 641: "The founders of the college, at least those whose contributions were in money, have parted with the property bestowed upon it, and their representatives

have no interest in that property. The donors of the land are equally without interest so long as the corporation shall exist. Could they be found they are unaffected by any alteration in its constitution and probably regardless of its form or even of its existence. The students are fluctuating, and no individual among our youth has a vested interest in the institution which can be asserted in a court of justice. Neither the founders of the college nor the youth for whose benefit it was founded complain of the alteration made in its charter or think themselves injured by it. The trustees alone complain, and the trustees have no beneficial interest in the trust."

In applying these cases, and any the respondents may cite, we beg this court to remember that these appellants are Mormons; that they believe and are trying to propagate the Mormon religion; that the bill broadly admits that they believe in the Bible and the Book of Mormon; that the Book of Doctrine and Covenants is a book of uncertain authority, much of the contents of which respondent does not claim to be inspired—simply good reading; that it is only claimed that appellants do not believe in the portion after 1834; that this 63 acre tract was bought in 1831, and if it was impressed with a trust, it was for the church as it believed in 1831; that if appellants cannot advance, then neither respondent nor the original church could change; that the matter of trust funds in the hands of Partride is one of grave doubt, no one knowing the donors nor the sums given; that no one of the donors is among the Lamoni congregation; that the only donor testifying belongs to the great Utah church and that he says Partridge told him that his funds, as well as that of others, were put into these lands, which were to be for private as well as for charitable

uses; that no one of the donors is complaining or is desirous of despoiling appellants of their place of worship; that this case is not like most reported cases, a struggle between a divided congregation for the church where they worshipped together; that it is not a fight between a dominant church and a seceder, but between two of the many fragments from the main body; that it is not even a contest between local congregations, but between a home one and a foreigner, whose sect has a church opposite the one sued for; that the suit is between a congregation which is the only one which has ever used this ground as a place of worship and one which can never use it as such if it should get it; that it is an appeal to equity by the stronger to deprive the weaker of that which it has bought and paid for, and lastly, that the orthodoxy of these contending fragments has never been passed upon by any church tribunal.

XV.

There are several mistakes as to the record in the petition for the writ, to which we will not call attention as they will appear by the statement and brief of appellants. We wish especially again to call attention to the fact that there never was any such lot as the "Temple Lot" so often referred to in the petition. The *lots* complainant sues for are divers lots according to a plat made by the purchasers of this sixty-three acre tract of land. The Temple Lot never existed; no one is found who will even guess at its size, under oath; it never had any front or depth; it never had boundaries; its size must vary according to the imagination or zeal of the Mormon wishing to locate it.

Certain it is that the revelations in reference to is were not made by a lawyer, or by one with knowledge of law; the author of the revelation is

the only one who can survey it and fix its corners. But with this objection left out, complainant has no more right to the lots sued for than it has to the rest of the lots composing this sixty-three acre tract of land upon which a part of the City of Independence is built.

XVI.

If the writ is granted to petitioners, it ought to go as of course in all cases. The market value of the land sued for is small. The value put upon it by the parties to this litigation is due to revelations, an element of value not known to the law. Aside from those belonging to these two contending sects (leaving out of view that a decree for complainant would cast a cloud upon much improved property) no one cares who gets this land. If it is a matter of "general importance" that these lots should be held for a "pious use," then we say they had been so held by appellants long before this suit was begun, and by them alone. If it is a matter of "gravity" that they should be held by those of Mormon belief, then they will be so held under the decision of the Circuit Court of Appeals.

This is simply a suit by complainant for land it did not buy and which it cannot use, against those who did buy, *and for their own use and benefit.* It is a suit against those who have for a long time used the land for church purposes and who need it for such purposes, by complainant which has a large church directly opposite this land, and who could not use it for such purposes if this Court should make a present of it to complainant by means of a decree; each party is claiming adversely by a different paper title.

In the American Construction Company vs. Jacksonville Railway, 148 U. S. 383, this Court

said: "In the same spirit, the authority conferred on this court by the very provision on which the petitioners mainly rely, by which it is enacted that 'in any such case as is hereinbefore made final in the Circuit Court of Appeals, it shall be competent for the Supreme Court to require by certiorari or otherwise, any such case to be certified to the Supreme Court for its review and determination, with the same power and authority in the case as if it had been carried by appeal or writ of error to the Supreme Court,' has been held to be a branch of its jurisdiction which should be exercised sparingly and with great caution, and only in cases of peculiar gravity and general importance, or in order to secure uniformity of decision. Lau Ow Bew's case, 141 U. S. 583 and 144 U. S. 47: In re Woods 143 U. S. 202. Accordingly while there have been many applications to this Court for writs of certiorari to the Circuit Court of Appeals under this provision, two only have been granted; the one in Lau Ow Bew's case above cited, which involved a grave question of public international law, affecting the relations between the United States and a foreign country; and the other in Fabre, Petitioner, of the present term, an admiralty case which presented an important question as to the rules of navigation and in which the decree of the Circuit Court of appeals for the second circuit reversed a decree of the district judge and was dissented from by one of the three circuit judges; and in each of these cases the Circuit Court of Appeals had declined to certify the question to this Court."

XVII.

The charge in the petition (p. 3) that the church at Salt Lake is the real defendant and is operating through appellants is not the fact and is not supported by the record.

The claim in the petition (p. 5) that the Pool title to the lots sued for passed to Granville Hedrick as trustee for the Church of Christ of Latter Day Saints is not sustained by the record.

The deed of J. H. Hedrick and wife on page of record 575, expressly conveys to the party of the second part as trustee of the Church of Christ only using the words "Latter Day Saints" in parenthesis in the habendum clause and the other deed from Eaton to Granville Hedrick is the same. (Record page 576).

Mr. Hill explained distinctly what he meant when he said, beginning at last line of record, page 461: "I claim that the church I am now with is a part and parcel of the church I first associated myself with in 1848."

C. O. TICHENOR,
Attorney of Appellants.

(No Model.)

A. K. CAVERLY.

MACHINE FOR ROUNDING BENT HANDLES.

No. 303,116. Patented Aug. 5, 1884.

Fig. 2.

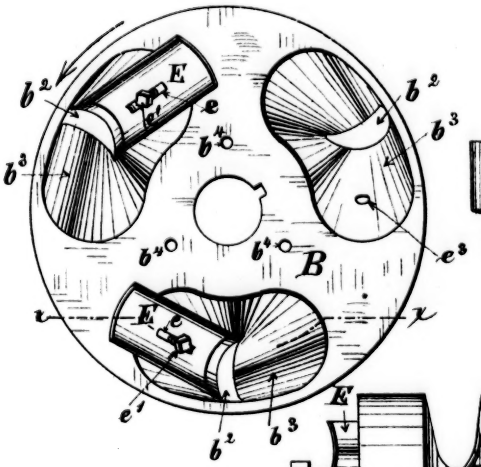

Fig. 3.

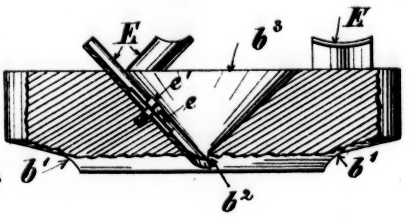

Fig. 1.

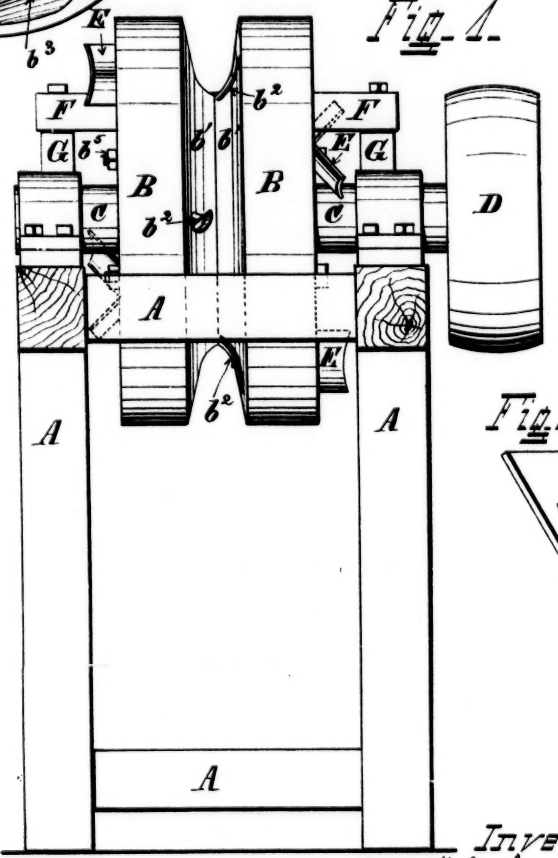

Fig. 4.

Fig. 5.

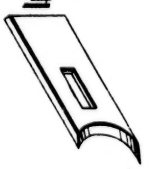

Attest
Carl. Spengel
Alice E. Wadsworth.

Inventor
Amos K. Caverly
By Hebert D. Blakiman Atty.

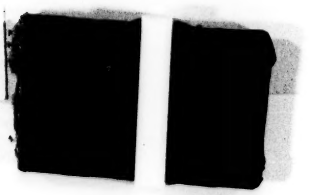

UNITED STATES PATENT OFFICE.

AMOS K. CAVERLY, OF MOLINE, ILLINOIS, ASSIGNOR TO SARAH CAVERLY, OF SAME PLACE.

MACHINE FOR ROUNDING BENT HANDLES.

SPECIFICATION forming part of Letters Patent No. 303,116, dated August 5, 1884.

Application filed November 23, 1883. (No model.)

To all whom it may concern:

Be it known that I, AMOS K. CAVERLY, of Moline, in the county of Rock Island and State of Illinois, have invented certain new and useful Improvements in Machines for Rounding Bent Handles and other Wood-Work, of which the following is a specification.

Heretofore the bent portions of handles used on cultivators and for other purposes have been rounded or ovaled to fit the hands of the operator by an ordinary draw-knife, in some instances by a lathe with a set-knife and in others by various styles of rotary cutters, and in either case smoothed or finished by running them over a sand-belt. The ovaling or rounding of wood-work for other purposes has been accomplished by similar means and finished or smoothed in like manner.

My invention relates to machines for forming such round or oval on bent-wood handles and other wood-work, whether bent or straight; and it consists in a cylindrical cutter-head mounted on an ordinary frame, and revolving vertically by suitable gearing, constructed, preferably, of two cylinders or disks bolted together, having in the center of its periphery a groove the shape and size of the curve or oval on the dressed handle, and the cutter-knives adjusted from both sides of the cutter-head into the groove, and in the various other combinations and details of construction hereinafter described and claimed.

For convenience I will illustrate and describe my invention with reference to the rounding of bent handles—such, for instance, as are used on plows and cultivators—although it is effective with many classes of wood-work where a rounded or ovaled edge is desired.

In the drawings, Figure I is a rear elevation of a machine embodying my invention, and showing particularly the construction of the cutter-head and its mounting on the frame-work. Fig. II is a side view of the cutter-head, showing the mode of adjustment of the cutters thereto. Fig. III is an edge view of one-half of a cutter-head, with parts cut away at *x x* in Fig. II to show the adjustment of the knives; and Figs. IV and V are detail views of cutter-knives.

A is a bench or frame such as is ordinarily used with emery-wheels or like machines, upon which is mounted a cutter-head, B, upon a spindle or shaft, C, rotated by a pulley, D, actuated by a belt or other suitable connection with the main driving-shaft. The front end of the machine is provided with a block, F, securely bolted on standards G, upon which the material is rested while being run through the machine.

The cutter-head B is of cylindrical form, made of steel, iron, or other suitable material, constructed, preferably, of two cylindrical pieces or disks, each having such a curved or concaved cut, *b'*, on its inner face, extending from beyond its diameter to its periphery, that when they are placed with their curved faces together the curves or concaves in the disks will form a groove in the head the size and shape of the dressed handle. When the cutter-head is constructed in two pieces, the latter are securely fastened together by bolts passing through bolt-holes b^1 in each and nuts b^2, or otherwise prevented from having independent motion. Each of the disks forming the cutter-head has one or more openings or ditches, flaring at the top on the outer face thereof, decreasing in width in their inward progress, and terminating at the bottom in narrow crescent-shaped openings b^3 in the curve on the inner face of the disk, the metal being concaved and sharply inclined at one end of the recesses, as at b^3, to permit the ready shedding of the chips from the cutter, and convexed and inclined in like manner at the opposite end to form beds for the concaved knives.

The cutter-knives E are thin plates of steel, beveled at their cutting ends like ordinary plane blades or bits, concaved on their cutting-faces to fit a convexed bed at one end of the openings in the cutter-head, adjustable thereon to regulate the depth of their cutting action by set-screws *e'*, working through a slot, *e*, in the knives, and secured by said set-screw to the head. If desired, the knives, instead of being concaved on their cutting-faces, may be made flat; but in such case the beds for such knives in the openings in each half of the head must also present a flat surface, and the machine with such shaped cutters will work as effectively as with any other. However, for reasons hereinafter stated, the curved knife is much more desirable, and is the one I prefer.

The number and mode of adjustment of the

21

(2)

cutter-knives used may be varied as the size of the head or the character of the wood to be shaped may render expedient. I have found that, for general purposes, six knives—three in each half of the head, the knives thereof on one side alternating in their appearance on the concave with those on the other—is a very satisfactory and efficient arrangement. The bent handle is held by the operator on the rest-block, and guided by him into the groove in the head, which, revolving rapidly—say two thousand revolutions per minute—by the action of its cutters, shapes the side of the handle exposed to the cutters the form of said groove. The handle is then turned over and guided into the groove in like manner, shaping the other side and completing the rounding of the handle. With some classes of work it is desired to round the handles on one side and oval them on the other, or otherwise vary the shape of the different sides, in which case several heads are employed with grooves and knives of the shape to give to the various sides of the handle the shapes required. Thus, if a handle is desired oval on top and round underneath, the top of the bent wood is run through a machine with about the shape of groove shown in the drawings, to form the oval, and then turned over and run through a semicircular grooved head to form the rounded surface on the under side. The knives are adjusted to the disks of the cutter-head upon sharply-inclined beds formed in one end of the openings in the disk, thus presenting the cutting-edges of the knives diagonally to the plane of the curved portions of the disks, as shown in Fig. III, similar to the manner in which plane-bits are secured to the plane-frame, the incline on the other side forming a channel for the discharge of the chips made by the cutters, and are adjustable back and forth within the disks by set-screws working in slots in the knives. By this longitudinal adjustment the depth of the cutting action of the knives may be regulated. The openings, where the cutters enter the curve on the disks, being narrow, the metal surrounding such openings resists the progress of the cutters beyond the distance to which the cutters extend beyond the curve, and by increasing or diminishing this distance the cut may be made deeper or shallower and the character of the work done varied. When the knives are projected to a considerable distance into the curve, the chips are larger, and the work consequently not so smooth as when the distance which they extend beyond the curve is made shorter; and when they are but slightly projected the chips are very fine and the work very smooth and nice. These adjustments may be made to suit the character of wood being shaped or the character of work required; but with proper care, with all qualities of wood, the arrangement of the knives may be made so that the handles shaped will be sufficiently smooth to go directly to the paint-shop without further smoothing or finishing.

The knife which I prefer is that shown in Fig. IV. It is constructed of a thin plate of steel beveled like a chisel-blade on its cutting end, curved to such an extent that when the blade is inclined with the beveled edge on a flat surface the bevel will touch the flat surface at every point in its plane. The advantage of this feature is that the blades, when dull, may be sharpened on a flat stone, whereas if flat knives like that shown in Fig. V are used a rounded stone the shape of the curve on the knife must be used.

A roller acting by a yielding pressure may be hung above the top of the cutter-head where the work to be shaped is of considerable length, to hold the wood down to the action of the cutters and form an additional guide therefor; but in the shaping of handles I have not found such a roller necessary.

I claim—

1. A cutter-head consisting of a cylinder with a groove in the center of its periphery and recesses from either side, terminating in narrow openings on such groove, for the adjustment of the cutter-knives.

2. A cutter-head constructed of two cylindrical disks, each with such a concave on its inner face, extending from beyond the diameter to the periphery, that when secured with their curved faces together the concaves form a groove on the periphery of the head corresponding to the shape and size of the dressed work, with one or more recesses extending from the outer face of each disk, diminishing in width as they progress, and terminating in a narrow opening in the curve, forming beds for the cutters and spouts for the discharge of chips, with knives secured in the openings.

3. A cutter-head constructed of two cylindrical disks, each with such a concave on its inner face, extending from beyond the diameter to the periphery, that when secured with their curved faces together the concaves form a groove on the periphery of the head corresponding to the shape and size of the dressed work, with one or more recesses extending from the outer face of each disk, diminishing in width as they progress, terminating in a narrow opening in the curve, forming beds for the cutters and spouts for the discharge of chips, with slotted knives secured in the openings and adjustable longitudinally therein by set-screws.

4. The combination of the frame, the cutter-head with groove in its periphery and one or more openings from each side, terminating in a narrow slit on the groove, one or more knives so curved that the bevel on their cutting ends presents a flat surface, and gearing by which the head is actuated.

AMOS K. CAVERLY.

Witnesses:
GEO. L. MCMASTER,
H. D. BLAKEMORE.

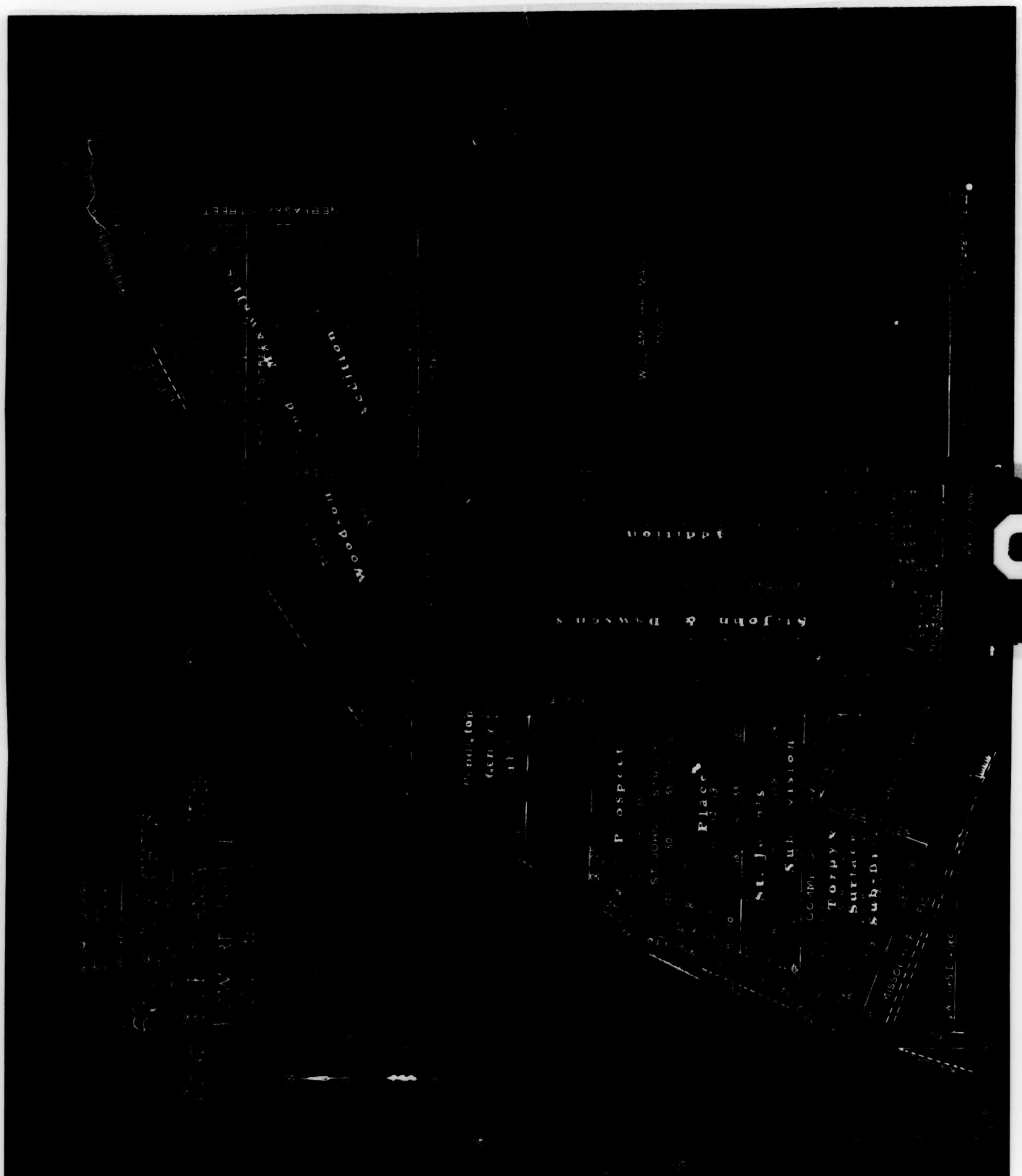
Prospect
Place
St. John's
Torpy's
Surface
Sub-D
Addition
Woodlawn
Addition
Addition
Addition